PLANNING COMMISSION AGENDA
December 10, 2009
7 p.m. Regular Meeting
Newberg Public Safety Building, 401 E. Third Street

I. ROLL CALL

II. OPEN MEETING

III. CONSENT CALENDAR (items are considered routine and are not discussed unless requested)
- Approval of November 12, 2009 Planning Commission Meeting Minutes

IV. COMMUNICATIONS FROM THE FLOOR (5 minute maximum per person)
- For items not listed on the agenda

V. LEGISLATIVE PUBLIC HEARINGS (complete registration form to give testimony - 5 minute maximum per person, unless otherwise set by majority motion of the Planning Commission)

1. APPLICANT: City of Newberg
REQUEST: Consider revisions to Newberg's Economic Opportunities Analysis (EOA). The EOA revisions include updated buildable land inventories for commercial and industrial land, updated demographic and economic statistics, updated information regarding Newberg's economic development strategy, and updates to the Comprehensive Plan land need and supply tables.
FILE NO.: CPTA4-09-001 RESOLUTION NO.: 2009-275
CRITERIA: Newberg Development Code § 151.122(B)

2. APPLICANT: City of Newberg
REQUEST: Consider changes to the Newberg Development Code to support the development of more affordable housing. The changes would do the following:
   - Add a definition regarding "special needs housing";
   - Allow reduction of parking requirements where an affordable housing development is near a transit stop or where the development provides its own transit;
   - Modify current driveway standard to allow more than two lots per driveway; and,
   - Add design standards for housing that promote the development of attractive, livable, and functional neighborhoods.

   FILE NO.: G-09-007 RESOLUTION NO.: 2009-273
   CRITERIA: Newberg Development Code § 151.122(B)

   REQUEST: Approve changes to the Newberg Development Code and Comprehensive Plan text tentatively approved under Planning Commission Resolutions 2009-265, 266, 267, 272 & 273, and forward the recommendation to City Council.
   RESOLUTION NO.: 2009-274

VI. NUAMC POSITION RECOMMENDATION
- Mayor Andrews has requested that the Planning Commission make a recommendation on which commissioner should be appointed to NUAMC

VII. ITEMS FROM STAFF
1. Update on Council items
2. Holiday Dinner: Yamhill Grill, December 14, 6:30 pm
3. Other reports, letters, or correspondence
4. Next Planning Commission Meeting: January 14, 2010

VIII. ITEMS FROM COMMISSIONERS

IX. ADJOURN

FOR QUESTIONS PLEASE STOP BY, OR CALL (503) 537-1240, PLANNING & BUILDING DEPT. - P.O. BOX 970 - 414 E. FIRST STREET

ACCOMMODATION OF PHYSICAL IMPAIRMENTS:

In order to accommodate persons with physical impairments, please notify the City Recorder's office of any special physical accommodations you may need as far in advance of the meeting as possible and no later than 48 hours prior to the meeting. To request these arrangements, please contact the city recorder at (503) 537-1283. For TTY service please call (503) 554-7793.

(This page left blank, intentionally)

PLANNING COMMISSION MINUTES
November 12, 2009
7 p.m. Regular Meeting
Newberg Public Safety Building
401 E. Third Street

TO BE APPROVED AT THE DEC. 10, 2009 PLANNING COMMISSION MEETING

I. ROLL CALL:

Present:	Lon Wall, Chair	Derek Duff	Thomas Barnes
	Nick Tri, Vice Chair	Matson Haug	Philip Smith
	Cathy Stuhr		

Absent: Amanda Golson, student PC

Staff Present: Barton Brierley, Planning & Building Director
David Beam, Economic Development Planner
Steve Olson, Associate Planner
Dawn Karen Bevill, Recording Secretary

II. OPEN MEETING:

Chair Wall opened the meeting at 7 p.m. and asked for roll call.

III. CONSENT CALENDAR:

Chair Wall entertained a motion to accept the minutes of the October 8, 2009 meeting.

MOTION #1: Haug/Duff to approve the minutes from the Planning Commission Meeting of October 8, 2009. (7Yes/ 0 No/) Motion carried.

IV. COMMUNICATIONS FROM THE FLOOR:

Chair Wall offered an opportunity for non-agenda items to be brought forth. No topics were brought forward.

V. QUASI-JUDICIAL PUBLIC HEARING:

APPLICANT: **City of Newberg**
REQUEST: **Annexation of a 19.68 acre parcel**
LOCATION: **1409 S. Sandoz Road (new animal shelter will be located on southeast corner)**
TAX LOT: **3229-100**
FILE NO.: **ANX-09-001** **RESOLUTION NO.: 2009-271**
CRITERIA: **Newberg Development Code §151.262**

Opening of the Hearing:

Chair Wall opened the public hearing and read ORS 197.763. He asked the Commissioners for any abstentions, conflicts of interest, and objections to jurisdiction. None were brought forward. Steve Olson, Associate Planner, presented the staff report (see official meeting packet for full report) and passed out Exhibit B Annexation Map & Exhibit C Legal Description that will become an official part of the resolution if approved.

Public Testimony:
Chair Wall opened the public testimony portion of the hearing. There were no proponents or opponents present. Councilor Bart Rierson, who also serves on the Animal Shelter Sub-Committee, was in attendance and made himself available for any questions. Councilor Rierson explained there is expansion room available for growth at the shelter. The Planning Commission discussed the zone change for this property and the future changes south of Wynooski.

Deliberation:
Chair Wall opened the deliberation portion of the hearing and asked for final comments and recommendation from staff. Staff concluded with a recommendation to approve Resolution 2009-271, which recommends to the City Council approval of the requested annexation with concurrent zone change, withdrawal of the parcel from the Newberg Rural Fire Protection District, and that if the annexation is approved by the voters then recommend Council initiate a request to Yamhill County to transfer jurisdiction of Sandoz Road to Newberg. Chair Wall asked for additional comments from Commissioners and after hearing none, closed the public hearing.

MOTION #2: Haug/Tri to adopt **Resolution 2009-271**, recommending to the City Council approval of the requested annexation. (7Yes/ 0 No) Motion carried.

VI. LEGISTLATIVE PUBLIC HEARINGS:

APPLICANT: **City of Newberg**
REQUEST: **Consider changes to the Newberg Development Code to support the development of more affordable housing: allow duplexes in R-1; allow more flexibility for accessory dwelling units; allow multiple second-story residences in C-1; incentivize more affordable dwelling units in PUDs; allow legal non-conforming duplex and mutli-family units to be reconstructed if destroyed; and reduce and provide flexibility to parking standards for affordable housing projects.**
FILE NO.: **G-09-007** **RESOLUTION NO.: 2009-272**
CRITERIA: **Newberg Development Code § 151.122(B)**

TIME: 7:42 PM

Opening of the Hearing:
Chair Wall opened the public hearing and asked the Commissioners for any abstentions, conflicts of interest, and objections to jurisdiction. None were brought forward. David Beam, Economic Development Planner, presented the staff report (see official meeting packet for full report) and handed out the proposed December 2007 Newberg Development Code Changes as reference for the Commissioners. This was the same information sent to them by email earlier in the week. Commissioner Haug commented that he liked the staff presentation, as it clarified many points. He expressed he wished he had this information prior to the meeting. He also asked how affordable housing affect property values of surrounding development. Mr. Beam handed out a copies of an item printed

off the internet from Habitat for Humanity. The handout lays out a collection of studies from various groups regarding how affordable housing affects property values. The vast majority of the studies have shown that affordable housing does not negatively affect existing property values. Mr. Haug stated he would like to have seen other viewpoints about this issue other than Habitat for Humanity.

TIME – 8:10 PM

Public Testimony:
Chair Wall opened the public testimony portion of the hearing. Roger Grahn stated he is both a proponent and opponent. His belief is that low-income housing will never be built in Newberg under current conditions. He's tried to build affordable housing himself, without success. Land is too expensive, as well as the cost of permits. Building affordable housing is a worthwhile cause, but the City needs to participate in the effort financially by subsidizing the land cost and/or reducing fees. It's more beneficial for him to build in Portland because the permit fees are significantly less. Portland offers density bonuses for certain issues, such as safety. Mr. Grahn suggested using a method by which a builder would write a check to the City for a portion of the fees and then pay to the City a certain percentage of the gross for 10 years after the project has been built and keeps its deed restriction. Mr. Grahn will write down his suggestions and forward to City staff. Mr. Grahn doesn't believe affordable housing will have a serious effect on property values, if managed properly.

Proponent Lee Means, Executive Director of YCAP, which is a social services agency serving low-income seniors and disabled individuals and families in Yamhill County. They run Harvest House, which is a transitional shelter home in Newberg for homeless families, and are the managing owners of Camelia Court, an affordable housing complex in Newberg. There is a lot to be said for spreading out affordable housing and not concentrating it all in one area. Ms. Means spoke to the humanitarian side, stating that as wonderful as Yamhill County is, people don't realize the extent of the low-income housing problem. In the last three months, they've seen a 48% increase in the number of people seeking help so they can stay in their homes. This county is in desperate need of affordable housing. YCAP is a funnel for state and federal housing to assist people with paying rent. Ms. Means just did a study on how much of that money is spent in each of the communities and it showed Newberg has significantly less affordable housing to refer people in need to. She spoke to the parking issue and stated many families have single parents and normally only have one car if any at all, as well as disabled individuals with one or no car.

Closing Comments from Staff:
Chair Wall asked for final comments from the Commissioners and recommendations from staff. Mr. Beam stated staff recommends the adoption of Resolution 2009-272 that recommends that the City Council adopt the proposed amendments to the Newberg Development Code, as detailed in Exhibit A in the resolution. Staff will also define "special needs housing" and will bring that definition back to the Commission for their consideration in the near future.

Commissioner Haug suggested moving some of these suggested development code changes along more slowly. For example, for ADUs in the R-1 zone, we could loosen some of the rules, but we should keep the conditional use in place so individual neighborhoods can be involved in these changes. If successful, then later we could make them outright permitted. This proposal has a number of changes all at once.

Barton Brierley explained that the change before the Planning Commission tonight would be changing accessory dwelling units in the R-1 zone from a conditional use to a permitted use. About eight years

ago, ADUs were put into the Development Code and at that time, they were made a conditional use in the R-1 zone. In essence, it already has been a gradual process. The recommendation before the Commission came from the Affordable Housing Ad Hoc Committee. Mr. Brierley noted there are two sides to this story. On one side, a conditional use would give opportunities for neighbors to comment and issues could be addressed. On the other hand; the conditional use process costs the applicant time and money. There have only been three requests for ADUs in R-1 in the last eight years. Concerning duplexes in R-1 there hasn't been any in the last 8-year period.

Chair Wall closed the public hearing and recessed at 9:04 PM for a five-minute break.

Deliberation:

TIME – 9:09 PM

Chair Wall opened the deliberation portion of the hearing.

MOTION #3: Haug/Tri to adopt **Resolution 2009-272**, recommending the City Council adopt the proposed amendments to the Newberg Development Code, as detailed in Exhibit A.

The Planning Commission reviewed the proposed changes and actions (pages 73 – 74 of the official meeting packet).

Commissioner Haug referred to Action 4.2I and believes it's more reasonable to reduce the square footage, but keep that change as a conditional use in order to see how it impacts neighborhoods.

MOTION #4: Commissioner Haug amended the motion; and moved to change Action 4:2I allowing duplexes in R-1, keeping them as a conditional use. No second was given; motion failed.

Commissioner Stuhr is concerned with Action 4.2C and the possibility of everyone adding accessory dwelling units, which can add demands to sewer, parking, water, etc. This application to existing homes where this wasn't anticipated or planned is something different from planning for future developments. She isn't convinced this won't affect livability.

Commissioner Smith stated he isn't persuaded by the Habitat for Humanity study, as many of the studies are too dated. He referred to Mr. Grahn's testimony and is intrigued by his idea of spreading payments for fees out over time. He noted that Lee Means spoke regarding the homeless count and it would be a great mistake to equate the need for the homeless with the need for affordable housing, since it is far larger and includes many different income levels. The Affordable Housing Action Plan is large and complicated and that is why the Commission is only hearing it bit by bit and not as a whole. ADUs only address a small part of the need for affordable housing. Also, keeping affordable housing all in the same area is a social disaster and is better to place it within other housing stock. He doesn't agree with the comments in Roger Currier's letter (see official meeting packet). Commissioner Smith is sympathetic to Commissioner Haug and Commissioner Stuhr's concerns, but is in support of this proposal. He also stated he believes the proposed parking standards are sufficient.

Chair Wall will vote for this resolution but understands the concerns voiced. City Council will need to make the political decision on this.

Commissioner Haug stated when you waive fees and permits, you do it on new development SDCs. However, that cost to build new systems is still there, and therefore, those costs are just transferred to existing residents living in the city. Mr. Haug is also the Chair of the Citizen Rate Review Committee and stated there is a lack of reserve funds for the Wastewater Treatment Plant. A 20% annual rate increase is needed per year over the next several years and asked the Commission to keep the SDCs needs in mind.

Vote on Motion #3: (5 Yes / 2 No [Haug, Stuhr]) Motion carried.

VIII. ITEMS FROM STAFF:

Update on Council items:

Barton Brierley stated the City Council did approve one small UGB amendment on the south side of Wynooski Rd. for 1.2 acres. At the next City Council meeting on December 7, 2009, they will be considering the Planning Commissioner appointments; there are two spots available and three applicants.

The next Planning Commission Meeting: December 10, 2009 and the Commission will be hearing more of the affordable housing amendments and an update to the Economic Opportunities Analysis.

Holiday Dinner Plans:
Barton Brierley stated the Commission needs to discuss the date and place for the holiday dinner. Commissioner Smith suggested the Yamhill Grill where they can have a private room for dinner. Mr. Brierley will suggest dates and the Commissioners can respond by email.

Other reports, letters, or correspondence:
The Electronic Sign Committee has had three meetings so far and Mr. Brierley is pleased with the group and the variety of opinions, thoughts, and interests. At this point, they've focused time on reviewing other cities' codes and interviewed three of the pilot program participants. At least three to four meetings are left, including a field trip to see existing signage.

IX. ITEMS FROM COMMISSIONERS:

None.

X. ADJOURN:

Chair Wall adjourned the meeting at 10:14 PM.
Approved by the Planning Commission this 10th day of December, 2009.

AYES:	**NO:**	**ABSENT:** (List Name(s))	**ABSTAIN:** (List Name(s))

Planning Recording Secretary *Planning Commission Chair*

(This page left blank, intentionally)

TYPE IV, LEGISLATIVE PUBLIC HEARING PROCEDURE

1. OPEN THE PUBLIC HEARING, ANNOUNCE THE PURPOSE, DISCUSS TESTIMONY PROCEDURE, AND TIME ALLOTMENTS[1]

2. CALL FOR ABSTENTIONS, CONFLICTS OF INTEREST AND OBJECTIONS TO JURISDICTION

3. STAFF REPORT

   A. PROJECT SUMMARY AND RECOMMENDATION BY STAFF

   B. STAFF SUMMARY OF LATE CORRESPONDENCE SUBJECT TO PLANNING COMMISSION REQUEST[2]

4. PUBLIC TESTIMONY (SEE "HOW TO TESTIFY" FORM)[3] [4]

   A. THE PLANNING COMMISSION CHAIR WILL CALL YOUR NAME WHEN IT'S YOUR TURN TO TESTIFY (NOTE: COMMISSIONERS MAY ASK QUESTIONS DURING THE TESTIMONY PERIOD, AT THE DISCRETION OF THE CHAIR)

5. STAFF SUMMARY OF WRITTEN TESTIMONY FROM REGISTRATION FORMS

6. CLOSE OF PUBLIC TESTIMONY PORTION OF HEARING (GAVEL)

7. FINAL COMMENTS FROM STAFF

8. DELIBERATION OF COMMISSION

9. ACTION BY THE PLANNING COMMISSION

NOTE: No new public hearings will be started after 10:00 p.m. (except by majority vote of the Commission).

---

1 The Chair of the Planning Commission may set time limits on the public testimony portion of the hearing.

2 ORS 197.763(3)(j) allows the City to establish procedures for submittal of evidence. The Planning Commission has established a period of one week prior to hearing for submittal of written evidence in order to be considered at the hearing. Written testimony received late will only be considered at the discretion of the Planning Commission.

3 Questions by those wishing to testify should be directed to the Chair during the PUBLIC TESTIMONY (Step 4) portion of the public hearing.

4 Questions may be asked by the Commissioners thru the chair during the PUBLIC TESTIMONY (Step 4) portion of the public hearing.

(This page left blank, intentionally)

Planning Division
P.O. Box 970 • 414 E First Street • Newberg, Oregon 97132
503-537-1240 • Fax 503-537-1272 • www.ci.newberg.or.us

Planning Commission Staff Report
Revised Economic Opportunities Analysis

File No.: CPTA4-09-001
Proposal: Adopt the revised Economic Opportunities Analysis and the accompanying Comprehensive Plan Amendments.

Planning Commission Hearing Date: December 10, 2009

Summary of Proposal: The original Economic Opportunities Analysis (EOA) was adopted by City Council in January 2006 by Ordinance 2006-2635. The EOA is considered part of the Comprehensive Plan and implements the goals and policies in Section H. The Economy. Much of the information found in the EOA is statistical and dynamic in nature, including demographic and economic statistics, population and employment projections, and buildable land inventories. Therefore, the EOA is not a static document and is meant to be updated with current information from time to time. The accompanying Comprehensive Plan amendments update similar statistical information and add five new policies to Section H. Having an updated EOA also ensures the city's compliance with Statewide Planning Goal 9: Economic Development.

Summary of EOA: Newberg's economic base has diversified over time and several of its home-grown industries have become national and international leaders in their respective fields. The City is slowly transitioning into more of an urban center for east Yamhill County as the population grows. However, Newberg citizens have made it clear that they value the "live here, work here, shop here" values and way of life. To keep up the City's commitment to the values of its residents, Newberg must strengthen its economic base and provide adequate industrial and commercial lands for current and future populations. The revised EOA has updated data on demographic and economic statistics to help us plan for these future populations.

Newberg has identified four business clusters that are the foundation of its economy: manufacturing, health care, higher education, and the wine/tourism industry. Ensuring the vitality of these business clusters is key to the economic health of our community. Newberg's economic development efforts focus on two principal strategies: 1) retention and expansion of existing businesses, and 2) recruitment of new businesses. The availability of developable land for businesses is a large part of Newberg's economic development strategy, and the City closely monitors the inventory of available land to ensure that there are opportunities for economic growth. The revised EOA has updated data on regional industry clusters and trends, an assessment of our community economic development potential, and an updated discussion of Newberg's economic development strategy.

The industrial and commercial buildable land supply tables in the revised EOA indicate a shortage of both types of land within the current Newberg Urban Growth Boundary. It is critical for economic development efforts to have adequate buildable land available that meets the identified site suitability requirements for both industrial and commercial areas. The City cannot help provide enough jobs for current and future residents without adequate land to locate new businesses on, and without adequate land for existing businesses to expand onto. Newberg does have many advantages that make it stand out in the regional marketplace, including the following: small town quality of life; access to quality education and skills training; strong established and growing industry clusters; strong local support for business and employment opportunities; proximity to the Portland Metropolitan Region; future Newberg-Dundee Bypass; and compliance with Oregon's statewide planning goals. The revised EOA includes updated buildable lands inventories and an updated discussion of Newberg's comparative advantages and disadvantages, along with strategies to address each.

Summary of Changes to the EOA:

- Updated population, demographic, economic and employment statistics.
- An economic trends analysis section that looks at national, state and regional trends, regional economic development industry clusters and target industries, Yamhill County agri-business, and regional industrial land availability.
- A new section that covers an assessment of our community economic development potential. This section includes updated employment projects, a discussion of Newberg's comparative advantages and disadvantages relative to similar regional markets, and Newberg's special opportunities to capitalize on its unique geographic niche in the regional marketplace.
- A more robust discussion of Newberg's economic development strategy. The current EOA focuses largely on regional targeted industry clusters; the revised version of the EOA focuses more on our local targeted industry clusters as the foundation of our economic development efforts. This section also includes actions to capitalize on Newberg's comparative advantages and to address the comparative disadvantages, and actions to implement the overall economic development strategy.
- Updated buildable land inventories and the addition of maps that illustrate the available industrial and commercial buildable land by area.

ATTACHMENTS:

Planning Commission Resolution 2009-275 with:

Exhibit A: Revised Economic Opportunities Analysis
Exhibit B: Comprehensive Plan Amendments
Exhibit C: Findings

1. Letter from Tom Fox, dated December 1, 2009
2. Comments from Steve Oulman, dated November 30, 2009
3. Public Comments

PLANNING COMMISSION RESOLUTION NO. 2009-275

A RESOLUTION OF THE PLANNING COMMISSION OF THE CITY OF NEWBERG RECOMMENDING THAT THE CITY COUNCIL ADOPT THE REVISED ECONOMIC OPPORTUNITIES ANALYSIS AND THE ACCOMPANYING PROPOSED COMPREHENSIVE PLAN AMENDMENTS

1. The original Economic Opportunities Analysis (EOA) was adopted by City Council in January 2006 by Ordinance 2006-2635. The EOA is considered part of the Comprehensive Plan and implements the goals and policies in Section H. The Economy. Much of the information found in the EOA is statistical and dynamic in nature, including demographic and economic statistics, population and employment projections, and buildable land inventories. Therefore, the EOA is not a static document and is meant to be updated with current information from time to time.

2. The revisions to the EOA include updated demographic and economic statistics, updated buildable lands inventory, and an expanded discussion of Newberg's economic development strategy. The accompanying Comprehensive Plan amendments update similar statistical information and add five new policies to Section H.

3. On November 6, 2009, notice of this hearing was included in the News of Newberg's Future newsletter and sent out to the comprehensive mailing list and notice was published in the Newberg Graphic newspaper on November 25, 2009.

4. On December 10, 2009, a hearing was held by the Newberg Planning Commission.

NOW THEREFORE, BE IT RESOLVED by the Planning Commission of the City of Newberg that it recommends to the City Council adoption of the revised Economic Opportunities Analysis as shown in Exhibit A and the accompanying Comprehensive Plan Amendments as shown in Exhibit B. This recommendation is based on the staff report, the findings in Exhibit C, and testimony.

DATED this 10th day of December, 2009.

AYES: NAYS: ABSTAIN: ABSENT:

ATTEST:

_____ _____

Planning Commission Secretary Planning Commission Chair

Exhibits:
A: Revised Economic Opportunities Analysis
B: Comprehensive Plan Amendments
C: Findings

Exhibit A

Economic Opportunities Analysis

Section 12 of Newberg Inventory of Natural and Cultural Resources

Originally Adopted by Newberg City Council January 3, 2006
by Ordinance No. 2006-2635
Proposed Revisions Draft November 2009

City of Newberg
Economic Opportunities Analysis

Table of Contents

Table of Tables iii
Table of Figures iii
I. Introduction 1
II. Economic Trends Analysis 3
National, State and Regional Trends 3
Regional Economic Development Industry Clusters and Target Industries 9
Yamhill County Agri-Business 10
Regional Industrial Land Availability 13
Newberg Population Profile 14
Historic and Future Growth Trends 14
Age characteristics 15
Educational Attainment and Income 15
Commuting Patterns 18
Newberg Employment Characteristics 19
Historic Economy 19
Current Economy 20
Retail Conditions 23
III. Assessment of Community Economic Development Potential 24
Employment Projections 24
Newberg's Comparative Advantages and Disadvantages 24
Comparative Advantages 24
Comparative Disadvantages 27
Special Opportunities 28
Dental Equipment Cluster 28
Alternative Energies 28
South Industrial Area 29
Aviation Related Industry 30
Nursery and other Agricultural Products 30
Wine/Tourism Industry 31
Retail 32
IV. Newberg's Economic Development Strategy 33
Capitalizing on Comparative Advantages & Addressing Comparative Disadvantages 33
Regional Focus 34
Locally Targeted Economic Development Industry Clusters (Target Industries) 36
Comprehensive Plan Policies and Recommended Supportive Economic Development Actions 37
V. Industrial and Commercial Land Needs and Supply 39
Industrial Land Need 39
Industrial Employment Projections 39
Industrial Site Requirements 39

Industrial Land and Sites 45
2030 Industrial Site Need vs. Supply 48
Commercial Land Need 48
Commercial Land Need 48
Commercial Site Requirements 49
Commercial Land and Sites 50
2030 Commercial Site Need and Supply 51
VI. Conclusion 53

Table of Tables

Table 12- 1: Yamhill County Value of Agricultural Production, 2007 11
Table 12- 2: Newberg Census Populations 14
Table 12- 3: Population Forecasts - Newberg Urban Area 15
Table 12- 4: Comparative Age Characteristics 15
Table 12- 5: Comparative Educational Attainment 16
Table 12- 6: Comparative Household Income 17
Table 12- 7: Comparative Median Household Income and Median Wages 17
Table 12- 8: Place of Work for Workers Living in Newberg 19
Table 12- 9: 2007 City of Newberg Annual Average Employment by Industry 21
Table 12- 10: Newberg Top Employers 2009 22
Table 12- 11: Population and Retail Sales 23
Table 12- 12: Industrial Employment Projections 24
Table 12- 13: Strategies to Capitalize on Comparative Advantages 33
Table 12- 14: Strategies to Address Comparative Disadvantages 34
Table 12- 15: Newberg Targeted Industries 37
Table 12- 16: Site Size Ranges by Targeted Industrial Cluster and Sector 41
Table 12- 17: Targeted Industry Clusters and Sectors by Site Size Ranges and Existing Newberg Industrial Firm Examples 42
Table 12- 18: Site Size Distribution by Firm Employment (2010-2030) 43
Table 12- 19: Required Industrial Site Suitability Characteristics 44
Table 12- 20: Buildable Industrial Land in Newberg UGB (2009) 46
Table 12- 21: 2010-2030 Industrial Land Supply and Need 48
Table 12- 22: Commercial Land Need 2010-2040 49
Table 12- 23: Required Commercial Site Suitability Characteristics 50
Table 12- 24: Buildable Commercial Land in Newberg UGB (2009) 50
Table 12- 25: Commercial Land Supply and Need 51

Table of Figures

Figure 12- 1: Comparative Median Household Income and Median Wage 18
Figure 12- 2: Employed Workers over 16 by Industry 20
Figure 12- 3: Projected Cumulative Employment Growth, 2005-2040 39
Figure 12- 4: Buildable Industrial Land, Newberg UGB 2009 47
Figure 12- 5: Commercial Areas and Buildable Commercial Land, Newberg UGB 2009 52

I. Introduction

Newberg's economy traditionally has been rural in nature. As the city with the second largest population in Yamhill County, Newberg serves as the commerce center for the eastern portion of the county's primarily agricultural economy. However, over the past couple of decades, Newberg has been making a slow transition to a city of more urban characteristics. Newberg's economic base has become more diversified, including some of its home-grown industries that have evolved into national and international leaders in their respective fields.

This trend toward urbanization is likely to continue as the growth of the Portland metropolitan area increasingly influences the character of Newberg. However, our city is one steeped in history, and is a community that possesses a strong sense of place. The citizens of Newberg highly value these characteristics and wish to maintain its unique identity. To do so, Newberg must strengthen its economic base. Newberg must support its existing businesses while nurturing new enterprises.

Newberg has identified four business clusters that are the foundation of its economy: manufacturing, health care, higher education, and the wine/tourism industry. Ensuring the vitality of these business clusters is key to the economic health of our community

Like most communities, Newberg's economic development efforts focus on two principal strategies:

1. Retention and Expansion of Existing Businesses. Newberg has been extremely fortunate in having strong commercial and industrial sectors. Newberg has an unwavering commitment to its existing businesses and industries. This commitment is underscored by the positive attitude of appointed and elected officials to meeting the needs of the business community – in terms of providing public facilities and services necessary for businesses to grow and prosper, and in listening to the business community in its long-range planning processes and regulatory review.

2. Recruitment of New Businesses. A substantial portion of Newberg's Economic Opportunities Analysis is devoted to attracting new traded-sector industrial and service-based industries that will bring new wealth to the community. To ensure that Newberg's economic development efforts are successful, we have carefully assessed economic trends and our comparative economic advantages and disadvantages, as required by Statewide Planning Goal 9 (Economy of the State).

   The City has worked closely with the Portland-Vancouver Regional Partners Council for Economic Development, the Oregon Business Development Department (OBDD), and the Department of Land Conservation and Development (DLCD) in defining the types of industry clusters that can be reasonably attracted to our community. Newberg also has determined the size and characteristics of sites required for Newberg to be competitive -- from a regional perspective -- in attracting our targeted businesses to the community.

Critical to Newberg's economic development efforts is the availability of developable land for

businesses, as redevelopment opportunities are limited. The City closely monitors the supply of these types of lands to ensure that opportunities for economic growth can be capitalized upon as they arise.

As for Newberg's targeted industrial clusters, most of these businesses require relatively flat sites, with a minimum of conflicting land uses (e.g., agricultural or residential areas), and close access to a major highway without travel through land with conflicting uses. Most will benefit tremendously by the construction of the Newberg-Dundee Bypass and its connection to Highway 219, which is planned in the Oregon Highway Plan.

The City also has considered the site characteristics required to attract targeted industrial clusters when considering Newberg relative to other Northwest communities. Newberg has identified four types of industrial development to focus on:

- Large site light industrial (individual sites reserved for single users);
- Airport light industrial (within the Sportsman Airpark Land Use Master Plan);
- Infill light industrial that takes advantage of remaining industrial sites within the existing UGB; and
- Master planned light industrial parks that provide a range of medium to small sites in a master planned setting.

The Oregon Business Development Department has made it very clear that providing large industrial sites for traded-sector employment opportunities in a master planned park setting with close access to Interstate 5 will put Newberg at a distinct advantage when compared with other Northwest communities.

Newberg has relatively little industrial land left within its UGB – and most of this land does not meet the site requirements of companies looking to expand and/or relocate to Newberg. After considering a range of alternatives both in and outside of the existing UGB, Newberg has concluded that the South Industrial Area best meets the site requirements of targeted industrial clusters. This area:

- Has large, flat "suitable" sites (i.e., meeting identified site requirements) with close access to Highway 219. The area has access within about 10 minutes to I-5, with no intervening urban areas. It has close access to the Highway 99W corridor, which will be further enhanced with construction of the Newberg-Dundee Bypass;
- Has natural buffers from adjacent agricultural and rural residential land that enhances the attractiveness of the area for traded-sector industrial use;
- Has immediate access to electrical, natural gas, sewer and water services;
- Is a natural extension of Newberg's existing light industrial and airport-related industrial areas.

Newberg's other primary existing business clusters (health care, higher education, wine/tourism) also must have opportunities for expansion if they are to remain vital. These businesses are usually located on lands zoned for commercial and/or institutional development.

Higher education institutions include George Fox University and Portland Community College. While the University currently owns sufficient land to satisfy its physical needs for the foreseeable future, much of that land is expected to be redeveloped to satisfy their programmatic needs. Portland Community College plans to build a branch campus in Newberg as a result of a bond measure that was passed in 2008. The College is nearing purchase of a site after an extended search yielded few opportunities for suitable sites.

The foundation of the local healthcare industry is Providence Newberg Medical Center, which is located at the east end of Newberg directly on Highway 99W. The hospital is located on land that will accommodate its expansion plans for the foreseeable future. Land to accommodate development of ancillary private medical services that would benefit from close proximity to the hospital is available.

The wine/tourism industry in Newberg is principally involved in the retail and service business sectors. Growing of the wine grapes and processing them into wine is done outside of Newberg's city limits. Further development of this industry will likely be accommodated through two mechanisms. First, Newberg's historical downtown buildings/land will continue to be reused and redeveloped for businesses of this industry, including direct sales of wine, restaurants, antiques, arts and crafts stores, etc. Second, the Springbrook Master Plan has a commercial node: one that is expected to include businesses that will cater to the needs of wine tourists. Moreover, this commercial node will be located next to the newly constructed Allison Inn and Spa, a high-end resort that targets wine tourists. Additional opportunities for manufacturing, processing, and storing wine could be made available if Newberg had adequate industrial land.

Finally, a community's economic development strategy must consist of more than ensuring the availability of an adequate land supply for future growth. The community also must commit to comprehensive set of actions that support local businesses. Included in this analysis is a list of recommended economic development actions that are intended to help Newberg assist its local economic partners.

II. Economic Trends Analysis

The EOA addresses local and regional trends (660-009-0015 (1)) on the following pages, concluding that Newberg's future employment growth will be dependent on regional economic clusters. The trends analysis results in identification of future industrial uses – the "Targeted Industrial Clusters" for Newberg.

National, State and Regional Trends

Economic development in Newberg over the next 20 years will occur in the context of long-run national trends.[1] The most important of these trends include:

- The aging of the baby boom generation, accompanied by increases in life expectancy. The number of people age 65 and older will more than double by 2050, while the number of

[1] National trends courtesy of ECONorthwest.

people under age 65 with grow only 22 percent. The economic effects of this demographic change include a slowing of the growth of the labor force, an increase in the demand for healthcare services, and an increase in the percent of the federal budget dedicated to Social Security and Medicare.[2]

Baby boomers are expecting to work longer than previous generations. An increasing proportion of people in their early to mid-50s expect to work full-time after age 65. In 2004, about 40% of these workers expect to work full-time after age 65, compared with about 30% in 1992.[3] This trend can be seen in Oregon, where the share of workers 65 years and older grew from 2% of the workforce in 1992 to 3% of the workforce in 2002, an increase of 64%. Over the same ten-year period, workers 45 to 64 years increased by 70%.[4]

- Tightening labor force. Growth in the labor force is projected to slow over the 2006-2016 period due to the aging and retirement of the baby boomer generation and because women's participation in the labor force has peaked. Job growth is expected to outpace population growth, with a 10% increase in employment (15.6 million jobs) compared to a 9% increase in civilian non-institutional population 16 years and older (22 million people).[5]

- Need for replacement workers. The need for workers to replace retiring baby boomers will outpace job growth. According to the Bureau of Labor Statistics, net replacement needs will be 33.4 million job openings over the 2006-2016 period, more than twice the growth in employment (15.6 million jobs). Management occupations and teachers will have the greatest need for replacement workers because these occupations have an older-than-average workforce.[6]

- Increases in labor productivity. Productivity, as measured by output per hour, increased over the 1995 to 2005 period. The largest increases in productivity occurred over the 1995 to 2000 period, led by industries that produced, sold, or intensively used information technology products. Productivity increased over the 2000 to 2005 period but at a slower rate than during the latter half of the 1990s. The sectors that experienced the largest productivity increases over the 2000 to 2005 period were: information, manufacturing, retail trade, and wholesale trade. Productivity in mining decreased over the five-year period. [7]

- Continued trend towards domestic outsourcing. Businesses continue to outsource work to less expensive markets. Outsourcing generally falls into two categories: (1) moving jobs from relatively expensive areas to less expensive areas within the U.S. and (2) moving jobs

---

[2] The Board of Trustees, Federal Old-Age and Survivors Insurance and Federal Disability Insurance Trust Funds, 2008, *The 2008 Annual Report of the Board of Trustees of the Federal Old-Age and Survivors Insurance and Federal Disability Insurance Trust Funds*, April 10, 2008.

[3] "The Health and Retirement Study," 2007, National Institute of Aging, National Institutes of Health, U.S. Department of Health and Human Services.

[4] "Growing Numbers of Older Workers in Oregon," Oregon Employment Department.

[5] Arlene Dohm and Lyn Shniper, "Occupational Employment Projections to 2016," *Monthly Labor Review*, November 2007, pp. 86-125.

[6] Arlene Dohm and Lyn Shniper, "Occupational Employment Projections to 2016," *Monthly Labor Review*, November 2007, pp. 86-125.

[7] Corey Holman, Bobbie Joyeaux, and Christopher Kask, "Labor Productivity trends since 2000, by sector and industry," Bureau of Labor Statistics *Monthly Labor Review*, February 2008.

outside of the U.S. to countries with lower labor costs. About three-quarters of layoffs in the U.S. between 1995 and 2004 were the result of domestic relocation, involving movement of work within the same company. The industries with the largest amounts of domestic outsourcing were: manufacturing, retail trade, and information.[8]

- Continued growth in global trade and the globalization of business activity. With increased global trade, both exports and imports rise. Faced with increasing domestic and international competition, firms will seek to reduce costs through implementing quality- and productivity-enhancing technologies, such as robotics or factory automation. In addition, production processes will continue to be outsourced offshore.[9]
- Continued shift of employment from manufacturing and resource-intensive industries to the service-oriented sectors of the economy. Increased worker productivity and the international outsourcing of routine tasks lead to declines in employment in the major goods-producing industries. Projections from the Bureau of Labor Statistics indicate that U.S. employment growth will continue to be strongest in healthcare and social assistance, professional and business services, and other service industries. Construction employment will also grow but manufacturing employment will decline.[10]
- The importance of high-quality natural resources. The relationship between natural resources and local economies has changed as the economy has shifted away from resource extraction. Increases in population and household income, combined with changes in tastes and preferences, have dramatically increased demands for outdoor recreation, scenic vistas, clean water, and other resource-related amenities. Such amenities contribute to a region's quality of life and play an important role in attracting both households and firms.[11]
- Continued westward and southward migration of the U.S. population. Although there are some exceptions at the state level, a 2006 U.S. Census report documents an ongoing pattern of interstate population movement from the Northeast and Midwest to the South and West.[12]
- The growing importance of education as a determinant of wages and household income. Level of education largely determines employment, which largely determines income level. Completion of a four-year college degree paves the way for a professional or managerial occupation in the information-based economy, which on average yields higher incomes than service jobs or menial labor. According to the Bureau of Labor Statistics, the majority of the

---

[8] Sharon P. Brown and Lewis B. Siegel, "Mass Layoff Data Indicate Outsourcing and Offshoring Work," *Monthly Labor Review*, August 2005, pp. 3-10.

[9] Eric B. Figueroa and Rose A. Woods, 2007, "Industry Output and Employment Projections to 2016," *Monthly Labor Review*, November 2007, pp. 53-85.

[10] Eric B. Figueroa and Rose A. Woods, 2007, "Industry Output and Employment Projections to 2016," *Monthly Labor Review*, November 2007, pp. 53-85.; Arlene Dohm and Lyn Shniper, "Occupational Employment Projections to 2016," *Monthly Labor Review*, November 2007, pp. 86-125.

[11] For a more thorough discussion of relevant research, *see,* for example, Power, T.M. and R.N. Barrett. 2001. *Post-Cowboy Economics: Pay and Prosperity in the New American West*. Island Press, and Kim, K.-K., D.W. Marcouiller, and S.C. Deller. 2005. "Natural Amenities and Rural Development: Understanding Spatial and Distributional Attributes." *Growth and Change* 36 (2): 273-297.

[12] Marc J. Perry, 2006, *Domestic Net Migration in the United States: 2000 to 2004*, Washington, DC, Current Population Reports, P25-1135, U.S. Census Bureau.

fastest growing occupations over the next decade will require an academic degree: computer software application engineers, elementary school teachers, and accountants and auditors. Service jobs, (e.g., retail sales person, food preparation workers, and home care aides) will account for about half of all jobs by 2016.[13]

- Continued increase in demand for energy. Despite short-term fluctuations, energy prices are forecast to remain at relatively high levels, as seen in the 2006 to 2008 period, likely increasing further over the 20-year planning period. Although energy sources are expected to diversify and the energy efficiency of automobiles, appliances, and production processes are projected to increase, energy demand is expected to increase over the 2008 to 2030 period due to increases in population and economic activity. [14]

- Impact of rising energy prices on commuting patterns. Energy prices may continue to be high (relative to historic energy prices) or continue to rise over the planning period[15] which may impact willingness to commute long distances. There is some indication that increases in fuel prices have resulted in decreased suburban housing demand which has resulted in decreased prices, especially in large urban areas (e.g., Los Angeles or Chicago) and suburbs far from the center city. If this pattern continues, the area in Oregon most likely to be most impacted is Portland, which has the largest area of urban and suburban development in the state.[16]

- Possible effect of rising transportation and fuel prices on globalization. Increases in globalization are related to the cost of transportation: When transportation is less expensive, companies move production to areas with lower labor costs. Oregon has benefited from this trend, with domestic outsourcing of call centers and other back office functions. In other cases, businesses in Oregon (and the nation) have "off-shored" employment to other countries, most frequently manufacturing jobs.

  Likewise, increases in either transportation or labor costs may impact globalization. When the wage gap between two areas is larger than the additional costs of transporting goods, companies are likely to shift operations to an area with lower labor costs. Conversely, when transportation costs increase, companies may have incentive to relocate to be closer to suppliers or consumers.
  This effect occurs incrementally over time and it is difficult to measure the impact in the short-term. If fuel prices and transportation costs decrease over the 20-year planning period, businesses may not make the decision to relocate (based on transportation costs) because the benefits of being closer to suppliers and markets may not exceed the costs of relocation.

---

[13] In 2006, the national median income was about $32,000. Workers with some college education earned slightly less than median, while workers with a bachelor's degree earned $45,000. Workers who only had a high school diploma earned $26,000 a year, while workers without a high school degree only earned $19,000 a year. Workers in Oregon experience the same patterns as the nation, however, notably, pay is generally lower in Oregon than the national average. (Source: "Growing Number of Older Workers in Oregon," Oregon Employment Department and American Community Survey, U.S. Census, 2006.)

[14] Energy Information Administration, 2008, *Annual Energy Outlook 2008 with Projections to 2030*, U.S. Department of Energy, DOE/EIA-0383(2008), April.

[15] Energy Information Administration, 2008, *Annual Energy Outlook 2008 with Projections to 2030*, U.S. Department of Energy, DOE/EIA-0383(2008), April

[16] Cortright, Joe. "Driven to the Brink: How the Gas Price Spike Popped the Housing Bubble and devalued the Suburbs," May 2008.

- Growing opportunities for "green" businesses. Businesses are increasingly concerned with "green" business opportunities and practices. These business practices are concerned with "the design, commercialization, and use of processes and products that are feasible and economical while reducing the generation of pollution at the source and minimizing the risk to human health and the environment."[17]

  Green business opportunities historically have been at the mercy of feasibility and economics; if a firm ignores feasibility and economics while trying to be green, the firm may not be able to afford to operate long enough to learn how to make green businesses feasible. However, growing popularity in "eco-friendly" products and green development has caused the green market to become cost-competitive with the conventional market. The three types of green business opportunities are products, processes, and education.

  - *Producing green products.* In general, green products consume fewer resources, and create less pollution, which in turn, is beneficial to human health. For example, hybrid vehicles (which use a mixture of power or fuel sources), use less gasoline to operate and add fewer pollutants to the air, while still providing the same transportation services as a traditional vehicle. Another example is bamboo fencing and lumber, which is considered a "rapidly renewable" material.[18] Unlike traditional building materials, rapidly renewable materials, by virtue of a more consistent harvesting cycle, may sustain a community over a longer period of time than the steady and eventual depletion of finite resources or the degradation of a productive ecosystem.[19]
  - *Providing education about green practices or products.* Green education is often closely related to producing green products and is often done by consultants or nonprofit organizations. One example of a company involved in green education is the U.S. Green Building Council, a 501(c)(3) non-profit, which provides third-party verification that a building or community was designed and built using strategies aimed at improving environmental performance (LEED certification), provides numerous education resources and commissions studies geared to advance the green building movement. Another example is a consulting firm that writes a green plan for a city or business.
  - *Using green business practices.* Green business practices are alternative methods of doing business that promote resource conservation, prevent or reduce pollution, or have other beneficial environmental effects. Examples of green business processes include: buying products locally to reduce shipping distance, recycling waste products (where possible), or maximizing the use of natural lighting to reduce use of electricity and light bulbs.

- Potential impacts of global climate change. There is growing support for but not a consensus about whether global climate change is occurring as a result of greenhouse gas emissions. There is a lot of uncertainty surrounding global climate change, including the pace of climate change and the ecological and economic impacts of climate changes. In the Pacific

[17] Urban Green Partnership at urbangreenpartnership.org

[18] Rapidly renewable materials are considered to be an agricultural product, both fiber and animal that takes 10 years or less to grow or raise, and to harvest in an ongoing and sustainable fashion. Bamboo is the fastest-growing plant on Earth.

[19] New Construction and Major Renovation LEED Reference Guide, Version 2.2, U.S. Green Building Council (September 2006).

Northwest, climate change may result in the following changes: (1) increase in average temperatures, (2) shift in the type of precipitation, with more winter precipitation falling as rain, (3) decrease in mountain snow-pack and earlier spring thaw and (4) increases in carbon dioxide in the air.[20] Assuming that global climate change is occurring and will continue to occur over the next 20 years, a few broad, potential economic impacts for the nation and Pacific Northwest include:[21]

- *Potential impact on agriculture and forestry.* Climate change may impact Oregon's agriculture through changes in: growing season, temperature ranges, and water availability.[22] Climate change may impact Oregon's forestry through increase in wildfires, decrease in the rate of tree growth, change in mix of tree species, and increases in disease and pests that damage trees.[23]
- *Potential impact on tourism and recreation.* Impacts on tourism and recreation may range from: (1) decreases in snow-based recreation if snow-pack in the Cascades decreases, (2) negative impacts to tourism along the Oregon Coast as a result of damage and beach erosion from rising sea levels,[24] (3) negative impacts on availability of water summer river recreation (e.g., river rafting or sports fishing) as a result of lower summer river flows, and (4) negative impacts on the availability of water for domestic and business uses.
- *Potential changes in government policies.* There is currently no substantial national public policy response to global climate change. States and regional associations of states are in the process of formulating policy responses to address climate change including: increasing renewable energy generation, selling agricultural carbon sequestration credits, and encouraging energy efficiency.[25] Without clear indications of future government policy, it is impossible to assess the impact of government policies on the environment and subsequently, the economy.

However, the impending issue of global climate change will also offer economic *opportunities*. The search for alternative energy sources may result in increased investment and employment in "green" energy sources, such as wind, solar, and bio-fuels. Firms in the Northwest are well positioned to lead efforts on climate change mitigation, which may result in export products, such as renewable technologies or green manufacturing. [26]

---

[20] "Economic Impacts of Climate Change on Forest Resources in Oregon: A Preliminary Analysis," Climate Leadership Initiative, Institute for Sustainable Environment, University of Oregon, May 2007.

[21] The issue of global climate change is complex and there is a substantial amount of uncertainty about climate change. This discussion is not intended to describe all potential impacts of climate change but to present a few ways that climate change may impact the economy of cities in Oregon and the Pacific Northwest.

[22] "The Economic Impacts of Climate Change in Oregon: A preliminary Assessment," Climate Leadership Initiative, Institute for Sustainable Environment, University of Oregon, October 2005.

[23] "Economic Impacts of Climate Change on Forest Resources in Oregon: A Preliminary Analysis," Climate Leadership Initiative, Institute for Sustainable Environment, University of Oregon, May 2007.

[24] "The Economic Impacts of Climate Change in Oregon: A preliminary Assessment," Climate Leadership Initiative, Institute for Sustainable Environment, University of Oregon, October 2005.

[25] Pew Center on Global Climate Change website: http://www.pewclimate.org/what_s_being_done/in_the_states/

[26] "The Economic Impacts of Climate Change in Oregon: A preliminary Assessment," Climate Leadership Initiative,

Short-term national trends will also affect economic growth in the region, but these trends are difficult to predict. At times these trends may run counter to the long-term trends described above. A recent example is the downturn in economic activity in 2007 following declines in the housing market and the mortgage banking crisis. The result of the economic downturn has been a decrease in employment related to the housing market, such as construction and real estate. Employment in these industries will recover as the housing market recovers and will continue to play a significant role in the national, state, and local economy over the long run. This report takes a long-run perspective on economic conditions (as the Goal 9 requirements intend) and does not attempt to predict the impacts of short-run national business cycles on employment or economic activity.

The national trends discussed above inform many of the emerging and targeted industry clusters identified in this EOA. They also underscore the importance of concentrating traded-sector industries in Newberg to reduce energy consumption and reliance on commuting. It's important to note that, despite national trends, Newberg has maintained a relatively high percentage of manufacturing jobs within the community and supports continuing to do so.

Regional Economic Development Industry Clusters and Target Industries

Industry clusters of a region are its principal economic drivers. The Portland Regional Business Plan identifies specific, traded-sector industry clusters that should be supported to enhance the economic base of the region. The Plan defines a cluster as follows:

> *A cluster is a group of firms that, though their interactions with each other and with their customers and suppliers, develop innovative, cutting-edge products and processes that distinguish them in the market place and from firms in the same industry found elsewhere. The competitiveness of an industry cluster is determined by the presence of highly specialized pools of skills, technology and infrastructure tailored to the needs of the cluster firms. The presence of sophisticated and demanding customers in a cluster pressures firms to innovate on a continuing basis....*
>
> *Those industry clusters that compete nationally and internationally are the core of this region's economy and what distinguishes it from other regions. The industry cluster that exist and that are emerging in the metropolitan area are built on the distinctive knowledge competencies of the region, and the strengths that currently enable the region to compete globally for economic activity and investment. Additionally, industries that sell their products and services nationally and internationally have greater long-term growth potential since their opportunities for growth are not constrained by the size of this region's market. For these reasons, focusing on industry clusters is both a more efficient and effective use of this region's efforts and resources.*

The Plan identifies the following industry clusters that the Portland region should focus on in their economic development efforts. Because of Newberg's proximity to the region, Newberg also has good likelihood of attracting these industries, and also should focus on attracting them.

Institute for Sustainable Environment, University of Oregon, October 2005.

These include:

1. Established
   a. High Tech (Semiconductors/Silicon, Imaging & Display Technology)
   b. Metals, Machinery, Transportation Equipment
   c. Nursery Products
   d. Specialty Foods and Food Processing
   e. Lumber and Wood Products

2. Emerging
   a. High Tech (Nano & Micro Technology, Cyber-Security, Health/Medical Information Technology)
   b. Creative Services (Advertising, Public Relations, Film and Video, Web/Internet Content and Design)
   c. Sports Apparel/Recreation-Related Products

3. Targeted (clusters desired to create and establish)
   a. Biotech/Bioscience (Medical Devices, Bioinfomatics, Pharmaceuticals, Genomics, Anti-Virals)
   b. Sustainable Industries (Renewable Energy, Resource Efficiency Technologies, Sustainable Building Materials, Green Chemistry)
   c. Professional Services (Architecture, Engineering, Legal and Financial Services, etc.)
   d. Distribution & Logistics

Newberg should provide opportunities for these industries to expand and locate within the Newberg UGB over the 20-year planning period. In addition, doing business in Newberg (e.g. real estate costs) can often be significantly lower than much of the Portland metro area. Our community offers a unique quality of life compared to others in the region, one that will attract those who believe their business will benefit from being located here. If Newberg provides suitable sites for these industry clusters, there is a reasonable likelihood that they will choose our community.

Yamhill County Agri-Business

In June 2009, Barney & Worth, Inc. prepared the *Yamhill County Agri-Business Economic and Community Development Plan: Summary Report* for Yamhill County. The plan assessed the existing state of agriculture and agri-tourism in the County, and assessed future opportunities for growth. According to the report, Nursery and Greenhouse Crops comprise 45.2% of the value of agricultural production in the county.

Table 12- 1: Yamhill County Value of Agricultural Production, 2007

Yamhill County Value of Agricultural Production, 2007	Value ($000)	Percent of Total
All Crops		
Nursery & Greenhouse Crops	$133,724	45.2%
Grass & Legume Seeds	$56,889	19.2%
Nuts & Tree Fruit	$24,684	8.3%
Small Woodlots and Christmas Trees	$13,204	4.5%
Grain & Hay	$9,600	3.2%
Vegetable & Truck Crops	$3,185	1.1%
Other Crops (Wine Grapes)	$13,387	4.5%
Sub total	$254,673	86.0%
All Livestock		
Dairy Products	$20,482	6.9%
Poultry	$9,780	3.3%
Cattle	$6,267	2.1%
Other Animal Products	$4,903	1.7%
Sub total	$41,432	14.0%
All Crops and Livestock	**$296,105**	

Source: Oregon Agricultural Information Network.

The report also recognizes great opportunities in the agri-tourism sectors. Key findings from the report include:

> *For 150 years and longer, Yamhill County has benefitted from its strong agricultural base. Even now, the agriculture sector produces $300 million in annual sales (not including food processing and wine). The great strength of Yamhill County agriculture is its diversity. Local agricultural production remains strong in many profitable sub-sectors, with fast growing horticulture accounting for nearly half of total sales. The future for Yamhill County agriculture looks bright.*
>
> *Alongside horticulture and traditional crops, the Yamhill County wine industry has emerged over the past 30 years to become headline news nationally and internationally. Yamhill's name – like Napa, Sonoma, Bordeaux and Burgundy – has become synonymous with its wine. With the wine sector continuing to flourish, new wineries opening each year, more acres planted with grapes, this trend will also be sustained in Yamhill County.*
>
> *Coupled with the area's scenic beauty (thanks in part to agriculture!), the wineries assure that Yamhill County will continue to host many visitors. Estimates already place that number at 1.5 million per year who visit local wineries. Half of those visitors come from the Portland area, and the other half are from the western states and all over the U.S. and world.*
>
> . . .

Yamhill County – with its solid agricultural base, wine destination status, proximity to the metro area, and stunning beauty – also appears to be on the verge of something great. With the opening of the Allison resort in Newberg, along with other new attractions, there's an opportunity just now to pick priorities and adopt strategies that move the community forward[27].

The plan identifies a number of key ingredients to secure the future for Yamhill County's agriculture and tourism sectors:

Shared vision for Yamhill County's future. *Yamhill County communities and citizens need to reach agreement on values and priorities for the future. Tourism is here to stay – now is the critical time to plan, safeguarding quality of life for local residents and maximizing the potential for community benefits.*

More lodging facilities. *To capture the economic benefits of the estimated 1.5 million annual visitors to wine country, Yamhill County must have more high amenity overnight accommodations.*

More attractions. *Wineries and hotels alone aren't enough to hold every visitor's attention and assure repeat visits. Wine tourism is seasonal and cyclical, and other destinations and attractions will be needed to complement Yamhill County wine country and fill out the tourism calendar: arts and culture, entertainment, historic sites, parks and trails, golf, outdoor adventures, shopping.*

Rezoning to accommodate prototype development projects. *Analysis has revealed the types of representative projects needed to support agriculture and tourism lack adequate sites. Rezoning enables communities to place these projects where they "fit" and provide benefits to the community.*

Site assembly. *Preparing land for development, from initial site selection through planning and marketing, is site assembly. To assure job growth and allow for new investment, communities will need to be proactive in identifying an adequate supply of properly sized, suitably zoned development sites and be active participants in the development process.*

County-wide infrastructure strategy. *The most pressing problem for every community is infrastructure. Regional cooperation in Yamhill County to jointly plan for the future and secure adequate drinking water supplies can be a model for cost saving inter-agency arrangements for other services. Moving ahead with a reprisal solution for drinking water is critical for many Yamhill County communities.*

---

[27] *Yamhill County Agri-Business Economic and Community Development Plan: Summary Report* Prepared for: Yamhill County, Oregon, Barney & Worth, Inc., in association with Globalwise, Inc., E.D. Hovee & Company, LLC, and Spencer & Kupper, page 41.

Coordinate opportunity sites / services. *The shortage of suitable development sites and scarcity of funds require strategic thinking. Which key sites and development opportunities must have adequate services available?*[28]

Regional Industrial Land Availability

In 2001, OTAK prepared the *Regional Industrial Land Study for the Portland – Vancouver Metropolitan Area.* This report inventoried the available industrial land in the area. That report concluded that the region would have a need for 6,900 acres of buildable industrial land for the period 2000-2025 [29]. The study found that, while the region had enough land, most of it suffered from development constraints and lack of services. The report found that the region had only 2,387 acres of ready-to-develop unconstrained land, only about 1/3 of the projected need.

Recognizing the severe shortage of industrial land in the region and the state, in 2003 Governor Kulongoski ordered the Community Solutions Team to help establish certified shovel ready industrial sites, and appointed the Industrial Lands Taskforce. In its report,

> *The Taskforce concluded that there is a significant lack of certain types of project ready industrial land in certain parts of the state. This conclusion is supported by the findings of the Portland-area Regional Industrial Lands Study (RILS), the HB3557 committee report, testimony received at Taskforce hearings, and the direct experience of Taskforce members. The Taskforce also concluded that the many jurisdictions lack a 20-year supply of industrial land.*[30]

In addition:

> *Although the committee selected the following five highly marketable sites, the industrial land supply in the METRO region remains critically low. Identifying these five sites is only a first step.* ***More industrial sites, especially those that could accommodate a large employer, are needed.***[31] [Emphasis added]

The report also discussed the lack of large industrial sites in appropriate locations:

> *<u>Unavailable Land in Strategically Significant Employment Areas</u>*
> *Given the Portland metropolitan area's economic significance to the state, the committee expressed concern that the selection pool of 55 sites forwarded to them from OECDD's Regional Development Officers (RDOs) included very few large industrial sites along I–5, between the Washington border and Salem. This occurred because there is a lack of land available for industrial development in this area. Land located at existing freeway interchanges, such as the Stafford District at I–205 and Stafford Road, Langdon Farms*

[28] Barney & Worth, Inc., page 43.
[29] *Phase 3: Regional Industrial Land Study for the Portland – Vancouver Metropolitan Area* prepared by Otak, Inc., in association with ECONorthwest and Parametrix, October 31, 2001
[30] *Positioning Oregon for Prosperity,* Report to Governor Kulongoski, prepared by the Industrial Lands Taskforce, September 2003
[31] *Industrial Lands Advisory Committee Report,* December 15, 2003

at the I–5 and Charbonneau exit, and the I–5 Donald/Aurora exit are logical market driven locations for large scale industrial and employment intensive development. [32]

While some efforts in the region have been made since that time to address this significant lack of industrial land in the region, the shortfall remains high and the needs have grown.

Newberg Population Profile

Historic and Future Growth Trends

Newberg has grown steadily through the last few decades. Table 12-1 shows the population growth over time since 1960.

Table 12- 2: Newberg Census Populations

Year	Population
1960	4,204
1970	6,507
1980	10,394
1990	13,086
2000	18,064

Source: U.S. Census Bureau

Newberg's population as of July 1, 2009 was estimated to be 23,150[33]. As of July 1, 2009, the Urban Growth Boundary has an estimated population of 23,582[34].

Between 1990 and 2000, Newberg's growth rate was 38%. In comparison, Newberg's growth rate was greater than the Portland Metropolitan area's at 27%, the state of Oregon at 20%, and Yamhill County's at 30%[35]. It should be noted that Yamhill County, where Newberg is located, is part of the Portland Metropolitan Statistical Area (PMSA). While Oregon's population in general is not expected to grow in the foreseeable future as fast as in the 1990s, the Portland metropolitan area should grow faster than the state as a whole.

In 2004, the Newberg City Council appointed an ad hoc advisory committee to look at the community's future land needs. To accomplish this task, the Ad Hoc Committee for Newberg's Future needed to forecast the community's future population. A consultant working with the Committee developed three growth forecast scenarios for the Committee to consider: low, medium, and high. The Committee selected the medium growth scenario as the most likely to occur. These population projections have been adopted into the Comprehensive Plan[36], coordinated with Yamhill County as required by ORS 195.036, and acknowledged by the State. The following table shows the forecasted future growth for Newberg:

---

[32] *Industrial Lands Advisory Committee Report,* December 15, 2003
[33] Population Research Center, Portland State University
[34] Newberg Planning Division
[35] U.S. Census Bureau
[36] Adopted by Ordinance 2005-2626, November 21, 2005

Table 12- 3: Population Forecasts - Newberg Urban Area[37]

Year	2000	2005	2010	2025	2030	2040
Forecasted Population	18,438	21,132	24,497	38,352	42,870	54,097

Source: Newberg Comprehensive Plan

Through 2008, these projections have been remarkably accurate. The 2008 PSU estimates are within 11 persons of the population estimates made in the comprehensive plan.

Age characteristics

Table 12- 4 below compares Newberg's population by age categories with the populations of Yamhill County, the Portland Metropolitan Statistical Area (PMSA), and the state of Oregon. The table also compares the median age for each geographical area.

Table 12- 4: Comparative Age Characteristics

Age Categories	Newberg	Yamhill County	PMSA	Oregon
Under 5 years	7.6%	6.4%	6.7%	6.3%
5 to 9 years	3.5%	5.4%	6.9%	6.4%
10 to 14 years	8.9%	8.0%	6.7%	6.4%
15 to 19 years	9.7%	7.9%	6.5%	6.7%
20 to 24 years	12.1%	8.4%	6.0%	6.6%
25 to 34 years	13.0%	13.9%	14.9%	13.9%
35 to 44 years	15.4%	13.4%	15.3%	13.9%
45 to 54 years	11.9%	14.4%	15.4%	15.1%
55 to 59 years	5.7%	6.4%	6.7%	6.9%
60 to 64 years	2.4%	3.9%	4.5%	4.9%
65 to 74 years	4.4%	5.6%	5.3%	6.5%
75 to 84 years	3.5%	4.2%	3.5%	4.5%
85 years and over	2.0%	1.9%	1.6%	1.9%
Median age (years)	30.6	34.9	36.3	37.6

Source: U.S. Census Bureau, 2005-2007 American Community Survey 3-Year Estimates

The data shows that Newberg's population is younger that the comparative populations, especially in the 20 to 24 year old category. This is likely due to the presence of students attending George Fox University. In general, our population over 45 years of age is somewhat lower than the comparative populations.

Educational Attainment and Income

Table 12- 5 below compares the educational attainment of the Newberg population over 25 years of age compared with Yamhill County, the PMSA, and the state of Oregon. Newberg has approximately the same amount of residents with high school diplomas as the comparative areas; however, there are fewer residents with a Bachelor's degree or higher when compared to the PMSA and the state. This may indicate that, although Newberg has a strong workforce in many areas, it does not have as many of the highly skilled professional jobs available that would

[37] Population forecasts are for the Newberg Urban Growth Boundary.

require a Bachelor's degree.

Table 12- 5: Comparative Educational Attainment

	Newberg	Yamhill County	PMSA	Oregon
Less than 9th grade	3.9%	7.0%	4.1%	4.6%
9th to 12th grade, no diploma	7.4%	8.2%	6.7%	7.9%
High school graduate (includes equivalency)	27.9%	31.8%	24.4%	26.9%
Some college, no degree	29.2%	24.3%	25.2%	25.3%
Associate's degree	7.2%	6.6%	7.7%	7.7%
Bachelor's degree	15.2%	13.8%	20.6%	17.6%
Graduate or Professional degree	9.1%	8.2%	11.3%	10.0%
Percent High School Graduate or Higher	89%	85%	89%	88%
Percent Bachelor's Degree or Higher	24%	22%	32%	28%

Source: U.S. Census Bureau, 2005-2007 American Community Survey 3-Year Estimates

Table 12- 6 compares the household income levels of the Newberg population over 25 years of age compared with the state of Oregon, Yamhill County and the PMSA. Newberg has a high percentage of households in both the $35,000 to $49,999 and the $50,000 to $74,999 income ranges. As seen below in Figure 12-2, Newberg has high employment in the areas of construction, retail, manufacturing, and educational services; industries whose pay would typically fall into these ranges.

Table 12- 6: Comparative Household Income

Household Income*	Newberg		Yamhill County		PMSA		Oregon	
	Number	Percent	Number	Percent	Number	Percent	Number	Percent
Less than $10,000	483	7.1%	2,378	7.2%	52,888	6.5%	108,551	7.5%
$10,000 to $14,999	552	8.1%	2,142	6.5%	39,721	4.9%	87,317	6.0%
$15,000 to $24,999	513	7.5%	3,189	9.7%	79,348	9.7%	168,261	11.6%
$25,000 to $34,999	819	12.0%	3,748	11.4%	85,031	10.4%	169,167	11.7%
$35,000 to $49,999	1,469	21.5%	5,462	16.6%	119,523	14.6%	225,677	15.6%
$50,000 to $74,999	1,430	20.9%	6,668	20.3%	166,437	20.3%	287,225	19.8%
$75,000 to $99,999	1,087	15.9%	4,480	13.6%	108,932	13.3%	174,531	12.1%
$100,000 to $149,999	363	5.3%	3,257	9.9%	103,824	12.7%	145,655	10.1%
$150,000 to $199,999	101	1.5%	772	2.4%	32,632	4.0%	42,738	3.0%
$200,000 or more	20	0.3%	737	2.2%	29,570	3.6%	38,287	2.6%

* In 2007 Inflation Adjusted Dollars
Source: U.S. Census Bureau, 2005-2007 American Community Survey 3-Year Estimates

Table 12- 7 compares the median household income and median wages for Newberg, Yamhill County, the PMSA, and the state of Oregon. Figure 12- 1graphically shows that Newberg is behind Yamhill County and the PMSA in median household income and median wage.

Table 12- 7: Comparative Median Household Income and Median Wages

	Newberg	Yamhill County	PMSA	Oregon
Median Household Income	$46,066	$48,485	$53,935	$47,385
Median Wage	$19,821	$23,848	$30,094	$26,002
Male, Full-Time, Year-Round	$44,205	$41,148	$47,803	$42,676
Female, Full-Time, Year-Round	$29,063	$31,680	$36,563	$33,017

Source: U.S. Census Bureau, 2005-2007 American Community Survey 3-Year Estimates

Figure 12- 1: Comparative Median Household Income and Median Wage

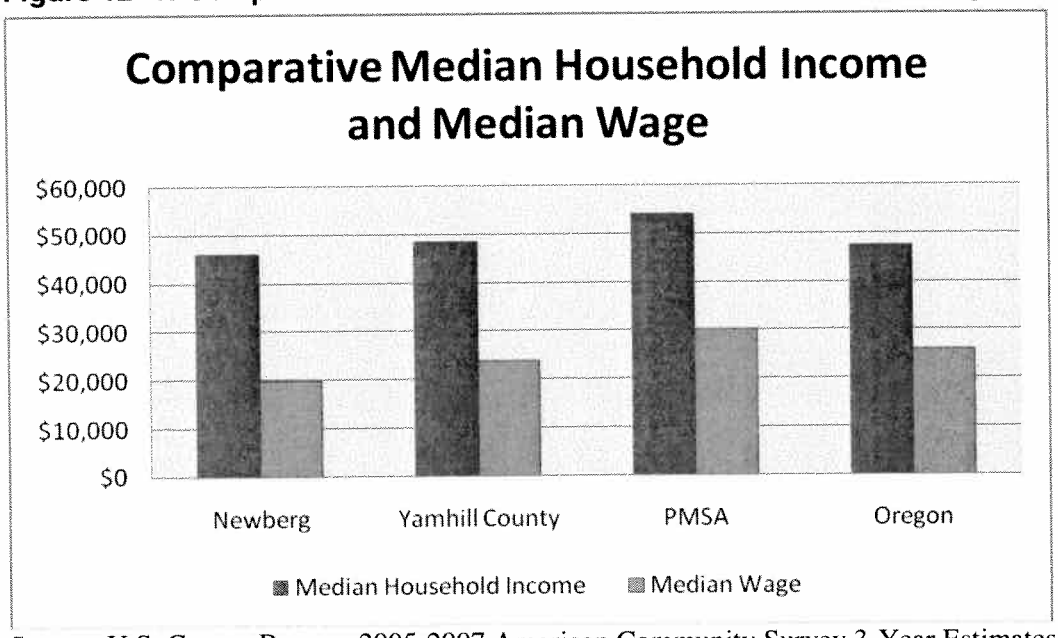

Source: U.S. Census Bureau, 2005-2007 American Community Survey 3-Year Estimates

Comparing the previous education and income tables reveals a very interesting profile of the Newberg community. The Newberg population has a smaller percentage of 4-year college and graduate degrees than the state or the PMSA; however, Newberg is also home to George Fox University. This indicates that George Fox University graduates are not remaining in Newberg, whether by choice or by other factors such as limited available job opportunities. Newberg also has a lower median household income and median wage than Yamhill County, the PMSA and the state. This may be related to the fact that Newberg has fewer citizens with higher education. As shown in Figure 12-2 on page 12-20, Newberg has a high percentage of workers in educational services and manufacturing jobs, both historically lower-paying professions (with the exception of highly skilled manufacturing jobs).

Commuting Patterns

The 2006-2008 American Community Survey 3-Year Estimates indicate that approximately 56% of workers over age 16 that live in Newberg travel outside of Newberg for work. Of those people that commute outside of Newberg for work, approximately 55% of workers stay in Yamhill County and approximately 45% of workers commute to other counties. The data indicates that the mean travel time for a worker leaving Newberg for work is 21 minutes. Given Newberg's relatively close proximity to the Portland metropolitan area, it is reasonable to assume that many of the workers leaving Newberg for work are going to one of the nearby Portland suburbs (which are located in Washington, Multnomah and Clackamas Counties). The following table shows this commuting pattern.

Table 12- 8: Place of Work for Workers Living in Newberg

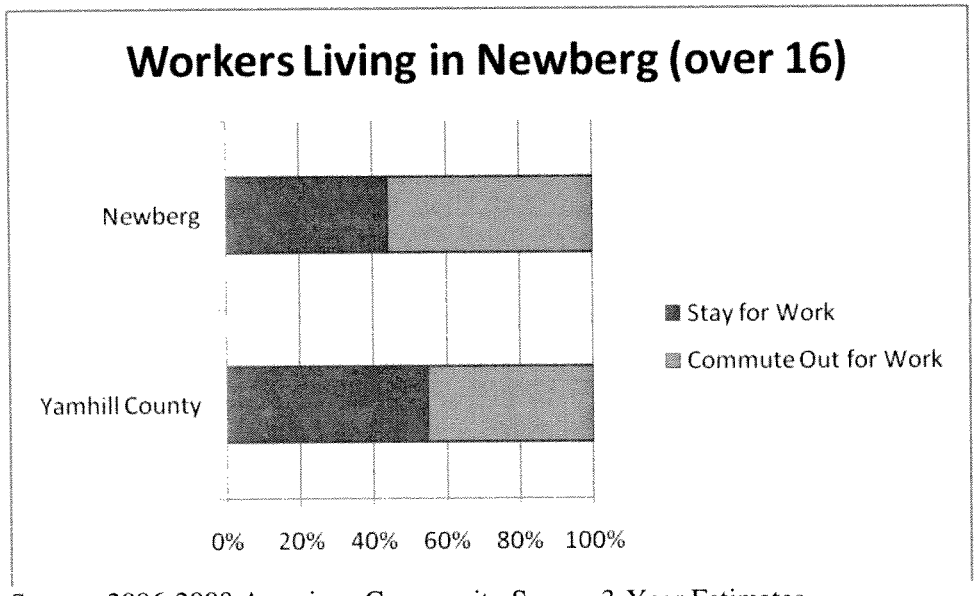

Source: 2006-2008 American Community Survey 3-Year Estimates

The Oregon Employment Department has statistics regarding commuting patterns within Yamhill County. Of all the workers that live in Yamhill County, approximately 12% work in Newberg. Approximately 31% of all workers that live in Yamhill County commute to the nearby Portland metropolitan area counties (Washington, Multnomah and Clackamas Counties); a statistic that is similar to the number of Newberg workers commuting out to these counties. The Newberg number is likely higher due to its proximity to these neighboring counties relative to the rest of the Yamhill County population.

Reasons for these commuting patterns are likely to be manifold, and may include:

- Lower housing costs in Newberg compared to the Portland area.
- More employment opportunities in the Portland area.
- Desire to live in a community like Newberg with a high quality of life and sense of community, rather than a "same as everywhere else" type of Portland area suburb.

Newberg would like to provide more local employment opportunities, thus reducing travel time and distance for existing and future residents. In short, Newberg would like to reverse trends towards "bedroom community" status by providing a greater variety of local employment opportunities. To achieve this objective, Newberg must provide industrial sites with characteristics that capitalize on Newberg's comparative economic advantages.

Newberg Employment Characteristics

Historic Economy

Settlement of our region by people of European ancestry began a mostly agricultural economy for the area. As the region developed, Newberg slowly became the commercial center for the eastern end of Yamhill County and it remains so to this day. Evidence of this development is

expressed through Newberg's Central Business District, which consists of many early twentieth century buildings constructed in a high-density pattern.

The advent of the car as a primary mode of transportation for people brought about commercial development pattern of a lower density. Most of this type of development is situated along Highway 99W in the eastern section of the city.

Current Economy

Newberg has a diverse economic base. This diversity, along with the types of businesses, has provided Newberg with a reasonably stable economy. Figure 12-2 shows how Newberg compares with Yamhill County, the PMSA and the state for percentage of workers by industry. As the chart shows, Newberg has a high percentage of workers in construction, manufacturing, retail trade, and educational services.

Figure 12- 2: Employed Workers over 16 by Industry

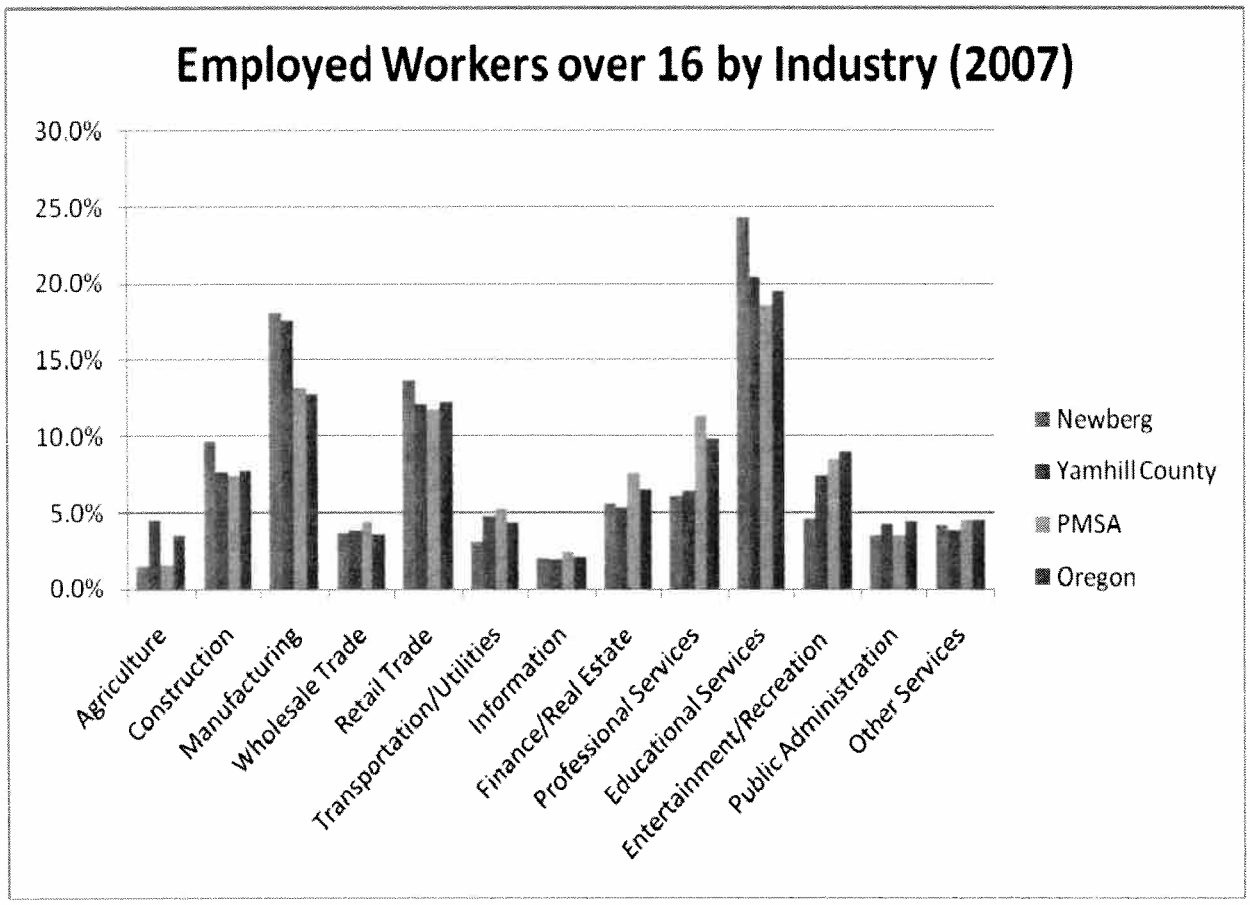

Source: U.S. Census Bureau, 2005-2007 American Community Survey 3-Year Estimates

Table 12-9 shows the actual employment by industry for Newberg in 2007, as reported by the Oregon Employment Department.

Table 12- 9: 2007 City of Newberg Annual Average Employment by Industry

Industry	Average Annual Employment	Total Payroll	Average Annual Wage
Agriculture, Forestry, Fishing and Hunting	142	$4,351,630	$30,645
Construction	773	$31,068,987	$40,193
Manufacturing	2,608	$135,015,712	$51,770
Wholesale Trade	103	$4,869,681	$47,278
Retail Trade	933	$25,761,682	$27,612
Transportation & Warehousing	167	$4,809,037	$28,797
Information	57	$2,148,418	$37,692
Finance & Insurance	169	$7,637,067	$45,190
Real Estate, Rental & Leasing	110	$2,693,296	$24,485
Professional, Scientific & Technical Services	199	$8,025,799	$40,331
Administrative Support, Waste Management, Remediation	207	$4,862,935	$23,492
Education Services	1,349	$45,973,472	$34,080
Health Care & Social Assistance	1,304	$45,422,729	$34,833
Arts, Entertainment & Recreation	148	$2,012,923	$13,601
Accommodation & Food Services	796	$10,227,414	$12,849
Other Services	397	$7,773,184	$19,580

Source: Oregon Employment Department

The following is a list of the top employers located within the urban growth boundary of Newberg in 2009.

Table 12- 10: Newberg Top Employers 2009

Employer	Average Employment	Product Description	Industry Cluster
A-dec	978	Dental equipment	Manufacturing
George Fox University	560	Higher Education	Higher Education
Newberg Public Schools	560	K-12 Education	Education
SP Newsprint Company	324	Newsprint	Manufacturing
Providence Newberg Medical Center	255	Health Care	Health Care
Suntron	220	Electronics (circuit boards, modular parts, cable assembly)	Manufacturing
Fred Meyer, Inc.	210	Groceries, retail	Retail
City of Newberg	181	Government	Government
The Allison Inn and Spa	165	Hotel and spa	Wine/Tourism
Friendsview Retirement Center	149	Continuing care retirement community	Health Care
FMC Food Tech	109	Food processing machinery	Manufacturing
Hazelden Springbrook	100	Alcohol and drug treatment	Health Care
Climax Portable Machine Tools	95	Portable machine tools	Manufacturing
Safeway	80	Groceries, pharmacy	Retail
Harris Thermal Transfer Products	73	Heat exchanger manufacturing	Manufacturing
Chehalem Youth & Family Services	73	Child and family services	Health Care
Dental Components, Inc.	60	Dental equipment	Manufacturing
Ushio Oregon, Inc.	53	High intensity lamps	Manufacturing
A.R.E. Manufacturing	51	Dental equipment and boat parts	Manufacturing

Source: Chehalem Valley Chamber of Commerce; Reuters

Newberg has a higher than average manufacturing employment base. The list of companies in the table above shows that many of the community's businesses are industrial in nature. Education (e.g. George Fox University) and health care (e.g. Providence Newberg Hospital) are also big components of Newberg's economic structure. With the addition of the Allison Inn & Spa, the wine industry is beginning to make a larger impact, along with the associated tourism industry: bed and breakfasts, restaurants, art shops, wine-tasting rooms.

Retail Conditions

Newberg's close proximity to the Portland metro area and relatively low retail opportunities results in retail dollar "leakage" from the community. This means that fewer retail dollars stay in the community and continue to circulate within the local population. Support for this assertion of retail dollar leakage can be demonstrated through some simple calculations. By taking the total annual retail sales numbers of area, divided by the area's population, one gets a total annual retail spending per capita in that community. Using this formula, the following is a list of the annual retail sales per capita in population centers within Oregon.

Table 12- 11: Population and Retail Sales

Population Center	Annual retail sales per capita
Newberg	$9,462
McMinnville	$11,798
Ashland	$7,495
Medford	$21,470
Washington County	$12,386
Salem	$13,807
Bend	$22,933
Pendleton	$12,515
Eugene/Springfield	$14,132
Oregon	$10,542

Source: U.S. Census Bureau, 2000

Newberg's local retail spending is the below the state average. McMinnville's retail spending is higher than Newberg, but also has more shopping opportunities. Ashland and Medford's relationship is much like Newberg with the Portland metro area, with many Ashland retail dollars likely to be going to Medford businesses. Many other commercial centers around Oregon, like Salem, Bend, Pendleton and Eugene/Springfield also appear to attract more retail dollars per capita that the state average.

It is acknowledged that this calculation is simplistic. Many other variables would affect a more thorough analysis, such as total income, disposable income, geographic boundaries and population dispersion. However, it is probable that the biggest factor in retail dollar leakage remains the fact that small towns with limited shopping opportunities will always lose retail dollars to nearby urban centers.

Outside of Newberg, agriculture is still an important industry to the area's economy. The wine/tourism industry has an especially large impact upon Newberg. Many new businesses, such as restaurants, bed & breakfasts, art galleries, and gift shops, have been established with recognition that tourists would be a principal customer. The Yamhill Valley (consisting of portions of Yamhill and Polk County) is the heart of Oregon's $576 million wine industry, with about 200 vineyards and 85 of Oregon's 200 wineries[38]. The wine industry in Yamhill County has grown exponentially over the last few decades.

[38] *News-Register*

III. Assessment of Community Economic Development Potential

Employment Projections

In 2004, Johnson-Gardner prepared future industrial employment projections based on long-range employment forecasts by the Oregon Employment Department. Employment projections are shown in Table 12- 12 below. In general, employment is forecasted to rise in each employment sector through 2040.

Table 12- 12: Industrial Employment Projections

Employment Sector	Industrial Space-Utilizing Employment							
Year	**2005**	**2010**	**2015**	**2020**	**2025**	**2030***	**2035**	**2040***
Construction	158	177	202	233	272	293	322	350
Manufacturing	2,091	2,271	2,487	2,744	3,052	3,248	3,487	3,727
Wholesale Trade	80	84	87	90	93	97	100	103
Transportation, Warehousing & Utilities	119	130	142	157	173	185	199	212
Information	38	43	49	55	62	68	74	80
Professional & Business Services	74	84	94	107	120	130	142	154
Other Services	294	332	375	423	478	518	564	610
Government	49	54	60	68	77	82	89	96
Total	2,903	3,175	3,496	3,877	4,327	4,621	4,976	5,331
Cumulative Growth from 2005	**-**	**272**	**594**	**974**	**1,424**	**1,718**	**2,073**	**2,428**

Source: Johnson-Gardner. *Employment projections extrapolated for these years

Newberg's Comparative Advantages and Disadvantages

This section, Assessment of Community Economic Development Potential (660-009-0015-4), determines the types and amounts of industrial and other employment uses likely to occur in the planning area, relating to the results of the Trends Analysis and Inventory, and considers the planning area's economic advantages and disadvantages.

Comparative Advantages

1. Small town quality of life
    a. Relatively affordable housing
    b. Attractive rural setting in heart of wine country
    c. Attractive historic downtown
    d. Full service city separate from Portland metropolitan area with deep sense of community and history.
    e. High level of "social capital"

2. Access to quality education and skills training
    a. George Fox University is very highly regarded. George Fox is listed among the top 100 colleges in the United States in *Forbes'* 2009-10 ranking of "America's best colleges." *U.S. News and World Report* named the University on its list of "Best National Universities," and was the only Christian college in the Pacific Northwest to make this list. The *Report* also cited an academic reputation survey of high school counselors that ranked George Fox University among the top 100 national universities. Moreover, it reported that more Portland-area valedictorians and straight-A seniors enroll at George Fox University than at any other private college in Oregon. *The Princeton Review* lists George Fox as a "Best in the West" selection.
    b. Portland Community College recently passed a bond measure that will fund the construction of a branch campus in Newberg. The College will offer classes in the community in the fall of 2010. The College is expected to offer a wide range of academic and technical skills training that will serve the needs of local citizens and businesses alike.
    c. The Newberg School District has a higher percentage of Newberg students that meet or exceed state standards in reading, mathematics, writing and science than state averages. Average student SAT scores are 1567 compared to Oregon average of 1550 and national average of 1511.

3. Established and growing industry clusters
    a. The percentage of employment in the manufacturing sector in Newberg is higher than state average. Average wage is high in this sector.
    b. Dental equipment manufacturing cluster is very strong, including a world leader in this industry.
    c. The new $68.5 million Providence regional medical center has created hundreds of highly-skilled, well-paying job and solidified health care as one of Newberg's target industries. The hospital has also spurred development of retirement and health care facilities for seniors.
    d. The wine/tourism industry in Yamhill County is world-renowned. Given Newberg's strategic location as the eastern gateway to the area's wine country from the Portland metropolitan region, this industry is expected to experience continued strong growth. Total direct spending for tourism in Yamhill County has gone from $29.1 million in 1991 to $60.7 million in 2003 [39]. Businesses such as restaurants, bed and breakfasts, wine shops, and art galleries are benefiting from this rising industry and are actively pursuing these customers. In particular, Newberg's historic downtown has experience significant revitalization in recent years, much of it due to the increasing impacts of this industry. In 2009, the Allison, a large luxury inn and spa targeting wine tourists, was opened. This development was a significant investment in this local industry and a very demonstrative statement in its future.

4. Strong local support for business and employment opportunities

[39] Dean Runyan Associates

a. Newberg commits staff resources to retain existing business and recruit new businesses .
b. Newberg is commitment to planning "shovel ready" industrial sites.
   i. Sportsman Airpark Master Plan preserves the functional aspects of this airport. It also reserves developable industrial land for businesses that would benefit from having close access to airport services.
   ii. South Industrial Area Master Plan provides for the development of new industrial sites of various sizes that have good transportation access, especially to Interstate 5.
c. The Chehalem Valley Chamber of Commerce has high membership and very active in supporting members, business, and industry.
d. Coordination with County ensures that land outside city limits is reserved for intended employment uses and not converted to residential or commercial uses

5. Proximity to Portland metropolitan region
   a. Newberg has access to large market area, including the Portland-Vancouver area. This also provides access to other regions, including the Seattle, the Bay area and even Asian markets.
   b. Newberg has access to major state highways: Highway 99W and 219, and 10 to 15 minute access to I-5.
   c. Newberg has access to national/international transportation facilities, including air and water transportation facilities at the Port of Portland.
   d. Newberg has strong relationships with other economic development organizations in the region.

6. Future Newberg-Dundee Bypass
   a. The Newberg-Dundee Bypass is included in Oregon's Highway Plan. The location EIS has been approved. Plans are currently underway to construct a first segment of the bypass within 5-10 years.
   b. The Bypass will provide improved transportation facilities that will benefit existing industrial users (airport, Highway 219) in south Newberg by allowing traffic from those areas to access Highway 99W and SW Portland area markets without routing truck traffic through downtown.
   c. The Bypass will provide improved access to Newberg and the Portland region from I-5 (via Highway 219).
   d. The Bypass will reduce traffic in downtown Newberg and facilitate the objective of having a pedestrian-oriented city and retail and service center.
   e. The Bypass will provide improved transportation facilities near flat serviceable land in south Newberg.

7. Oregon's Statewide Planning Goals. Economic development in Oregon is strongly influenced by many of these goals. In particular, Goal 9 requires cities to identify comparative advantages, targeted employment opportunities and site requirements and to reserve land for long-term industrial uses. Compared to national and international competitors, this required planning work can help ensure that Newberg's efforts in the retention and recruitment of businesses is targeted, efficient and effective.

Comparative Disadvantages

The global economy provides strong competition for local, regional and national manufacturers. Many other countries, such as China and India, are attracting manufacturing facilities through a growing, trained workforce with lower, average wages than this region. Some of Newberg's disadvantages in competing in a regional and national marketplace include:

1) Transportation and access issues:
    a. Congestion on Highway 99W and travel times to Metro area markets slows shipments of goods and material, employees, and customers.
    b. Truck traffic on Highway 99W prevents Newberg's historic downtown from achieving its full potential by creating an environment that is less-than pedestrian friendly.
    c. Although Newberg has easy access to I-5 via Highway 219 and McKay Road, the Donald/Aurora Interchange at I-5 has access and capacity issues that will likely require a reconfiguration or some other interchange redesign to handle increased traffic capacity from future development in the region.
    d. The Newberg-Dundee Bypass is a significant future advantage to Newberg. However, ODOT may want to limit development near the Bypass interchange with Highway 219 in the future to ensure that adequate volume and capacity standards are met. Development limitations may require trip caps or a restriction on certain high-traffic generating uses.

2) In 2009, Newberg lacks suitable industrial sites to meet needs of targeted employment opportunities:
    a. Many existing industrially zoned parcels are constrained by size, topography, or height restrictions.
    b. Some formerly viable sites have been lost due to needs for Bypass right-of-way acquisition.
    c. Some existing sites are being reserved for future expansion of adjoining industrial users.
    d. Cost of infrastructure to serve sites can be prohibitive.
    e. Newberg lacks master planned industrial and business parks that allow for immediate development when industrial firms consider location in Newberg area

3) Highly parcelized land outside the UGB limits alternatives for meeting identified site requirements. Prior to the full implementation of Goal 3 and 4 measures to protect agricultural land outside of the Newberg UGB, considerable rural residential development was permitted outside the Newberg city limits. As such, the small parcel sizes and rural homes and businesses outside of the Newberg UGB limit the availability of suitable employment sites in rural residential exception areas.

4) Newberg's commercial sector has been under considerable stress as retail paradigms have changed over the last few decades. Regional malls and the more recent development of "big-box" stores are strong competitors to Newberg businesses. While the volume sales model of these types of stores bring lower costs to consumers for goods, this pattern has had a negative impact on the relatively smaller retailers of the local economy. In

addition, the ease of shopping through internet sales is being utilized by growing number of customers. Many locally-owned businesses find it difficult to compete under this new paradigm, a situation that has forced many of them to go out of business.

5) In addition, Newberg's close proximity to the Portland metro area and relatively low retail opportunities results in retail dollar "leakage" from the community. This means that fewer retail dollars stay in the community and continue to circulate within the local population.

6) Despite major investments in the last few years, SP Newsprint is experiencing financial pressures due to changing market conditions. The financial pressures on SP Newsprint are mostly on the macroeconomic scale, significantly reducing Newberg's ability to positively impact this situation.

7) Oregon's Statewide Planning Goals. Economic development in Oregon is strongly influenced by many of these goals. Balancing of these goals often creates a planning process for local economic development that is long, expensive, and uncertain: a process that is frequently incompatible with needs of an ever-increasingly fast-paced business world. It can prevent including suitable industrial and employment sites when needed.

Special Opportunities

Beyond the regional economic markets, Newberg has several special opportunities to capitalize on its unique niche geographically and in the market place. These are discussed below.

Dental Equipment Cluster

Newberg is the home of A-dec, one of the largest dental equipment manufacturers in the world. This also has spurred other dental equipment companies, such as DCI International and Beaverstate Dental, and several other industries that supply machined parts, electrical supplies, or other equipment. The dental industry is an expanding market, especially in Asian markets where dental care is increasing. There are over 30 billion teeth in China: if Newberg suppliers can capitalize on even a small part of this market, they could expand substantially.

Alternative Energies

As concerns of peak oil, global warming, and carbon emissions rise, so do opportunities for the alternative energy industry. Several Newberg firms already have begun to capitalize on this industry. Harris Thermal constructs heat exchange equipment that is used in the manufacture of biofuels. Climax Portable Machine Tools constructs equipment that is used in the maintenance of wind power turbines. Local companies such as Voltair are manufacturing wind turbines for private sale. The Newberg area has an expanding wind energy cluster of suppliers, manufacturers, and technicians. Newberg has excellent opportunities to capitalize on this market.

South Industrial Area

As noted in the discussion of regional industrial land availability on page 13, the region has a significant lack of suitable industrial sites. In particular, the region lacks large, flat industrial sites with good transportation access and available utilities. In addition, the state's Industrial Lands Advisory Committee found,

> *Land located at existing freeway interchanges, such as the Stafford District at I–205 and Stafford Road, Langdon Farms at the I–5 and Charbonneau exit, and the I–5 Donald/Aurora exit are logical market driven locations for large scale industrial and employment intensive development.* [40]

However, they also found:

> ***Donald-Aurora I–5 Interchange****—The Donald-Aurora interchange on I–5 is approximately 20 miles south of Portland. Although this is a prime location for industrial development when viewed from a market perspective, the land surrounding the interchange is zoned Exclusive Farm Use (EFU) and is in not within any jurisdiction's UGB. Given current land use laws these are substantial obstacles to development.* [41]

Newberg's South Industrial area is along Wynooski Road and Highway 219. Newberg recently prepared the *South Industrial Area Master Plan*, which envisions utilizing the area along Highway 219 south of Wynooski Road by including several large, flat parcels for future industrial use. The South Industrial Area is uniquely posed to accommodate industrial users in the region:

- It contains large, level sites. The area can accommodate employers needing sites of 10 acres up to 100 acres.
- The area is adjacent to Newberg's existing industrial areas, and is a logical extension of that area.
- It has excellent access. The area is about a 10-15 minute drive to I-5 without traveling through any intervening urban areas. The future Newberg-Dundee bypass will travel east to the Portland metro area through no traffic lights until the Portland UGB. It will allow travel west to the Oregon Coast through only one stop light, and to the Mid-Willamette Valley with few stops.
- Newberg has the utility capacity to serve the area with relatively short extensions.
- The area has excellent riparian buffers consisting of two stream corridors between the proposed future industrial area and conflicting uses. No travel would be required through residential or commercial areas.

Were the area included in the Newberg Urban Growth Boundary, it certainly would attract the target industries Newberg is seeking.

---

[40] *Industrial Lands Advisory Committee Report*, December 15, 2003
[41] *Industrial Lands Advisory Committee Report*, December 15, 2003

Aviation Related Industry

Newberg is home to the Sportsman Airpark. This is a private/public use airport in the Urban Growth Boundary. The Sportsman Airpark Industrial District is situated next to the landing strip. The Sportsman Airpark District has three important advantages over other airport related industrial areas:

- Industrial land can be owned by individual users. In most industrially zoned districts near airports, land can only be leased to users, and "through the fence" use of adjacent industrial land is not allowed.
- All adjacent land is within the UGB.
- The airpark is adjacent to the Airpark Residential Zone, which allows business owners and entrepreneurs to live in close proximity to their planes.

With these advantages, the airpark presents excellent opportunities for small to medium industrial users. It can accommodate aircraft related industries, such as manufacture of airplane parts or aircraft maintenance. It can also attract entrepreneurial businesses that need to use a plane for business travel, visiting clients, or delivering goods. A good example of this is a new company in town, Voltair, which is constructing a new facility in the Airpark Industrial area. Voltair is a manufacturer of wind turbines and their location in the Airpark Industrial area will allow for quick access for maintenance crews to fly to eastern Oregon to service turbine installations.

Nursery and other Agricultural Products

As noted in the section *Yamhill County Agri-Business* on page 10, Yamhill County has developed the *Yamhill County Agri-Business Economic and Community Development Plan*. Of particular note in the plan is the predominance of the nursery and greenhouse crop industry in Yamhill County, following by the grass seed and fruit and nut products. All of these are present in the Newberg area. The plan identified needs for processing facilities in the County for these and other agricultural products. The plan includes several strategies to promote the agricultural industrial. Of particular relevance to Newberg are the following recommended strategies:

> Rezoning to accommodate prototype development projects. *Analysis has revealed the types of representative projects needed to support agriculture and tourism lack adequate sites. Rezoning enables communities to place these projects where they "fit" and provide benefits to the community.*
>
> Site assembly. *Preparing land for development, from initial site selection through planning and marketing, is site assembly. To assure job growth and allow for new investment, communities will need to be proactive in identifying an adequate supply of properly sized, suitably zoned development sites and be active participants in the development process.*

> County-wide infrastructure strategy. *The most pressing problem for every community is infrastructure. Regional cooperation in Yamhill County to jointly plan for the future and secure adequate drinking water supplies can be a model for cost saving inter-agency arrangements for other services. Moving ahead with a reprisal solution for drinking water is critical for many Yamhill County communities.*[42]

Newberg has the infrastructure capable to support such processing facilities. The South Industrial area provides adequate sized sites that would accommodate small and large processing facilities.

Of course converting agricultural land to other uses should not be taken lightly, as that land is important to the agricultural industry. Newberg can assist in this respect by maintaining an urban growth boundary and providing adequate land within that boundary to meet urban land needs at relatively dense development levels. Agricultural land only should be included in the urban area where there is a demonstrated need.

Wine/Tourism Industry

The Chehalem Valley Chamber of Commerce recently branded the area as "the Gateway to Oregon Wine Country." Vineyards and wine productions is a booming business in the Chehalem Valley. This is attracting a great number of tourists, most with money to spend. This has spurred a number of associated economic opportunities, including:

- Accommodation and Hospitality services. Newberg is home to Oregon wine country's premiere facility: The Allison Inn and Spa. It also is home to several bed and breakfast inns and other hotels.
- Restaurant and wine tasting. Newberg features several opportunities for fine dining, including the Painted Lady and the Jory at the Allison. Downtown Newberg features several wine bars. There are many opportunities to expand fine and casual dining and wine tasting.
- Arts and Culture. Newberg's downtown has a strong and growing arts community. The Chehalem Cultural Center is set to open soon and will allow art creation and exhibits. This is a strongly growing sector with a lot of opportunity.
- Golf and Recreation. Newberg is home to the Chehalem Glenn Golf Course, one of Oregon's best. This publicly owned course attracts tourists from around the region. A third nine holes is planned, which will further promote the tourism in the area. Additional recreation opportunities, such as for bowling or a family fun center, are desired in the community.
- Riverfront commercial. Newberg has an adopted Riverfront Master Plan for areas along the Willamette River. This future development area will allow views of the Willamette while one shops, dines, or stays. The riverfront area provides access to Roger's Landing, one of the best and most used accesses to the Willamette River.

[42] Barney & Worth, Inc., page 43.

Retail

Newberg's retail objectives, beyond promoting the wine and tourism industries, focus on providing opportunities for local residents and businesses to obtain the goods the need without travel outside the community. Newberg does have strong retail areas, but sales of certain retail goods are either missing or undersupplied. In many cases the goods are available regionally, but Newberg residents must drive to other areas, such as Washington Square, Wilsonville, Sherwood, or McMinnville. As of 2009, the following retail services are either missing or undersupplied in Newberg: office supplies; electronics; clothing and footwear; sewing supplies; sporting goods; appliances; whole and natural foods. Additional retail services in these areas would be welcome.

IV. Newberg's Economic Development Strategy

Capitalizing on Comparative Advantages & Addressing Comparative Disadvantages

Table 12- 13: Strategies to Capitalize on Comparative Advantages

Advantage	Strategy / Action
1. Small Town Quality of Life	• Continue to provide relatively affordable housing opportunities. • Minimize adverse impacts on existing and planned residential neighborhoods from conflicting employment opportunities. • Continue revitalization efforts of historic downtown. • Support organizations that foster "social capital". • Work to improve the pedestrian/bicycle network in Newberg. *(Applicable Comprehensive Plan policies: 1.p., 1.q., 3.a.)*
2. Access to Quality Education and Skills Training	• Continue to support the Newberg School District, George Fox University, and Portland Community College in their efforts to train and motivate the kind of workforce required by existing and future employers in Newberg. *(Applicable Comprehensive Plan policies: 1.f., 1.q.)*
3. Strong Established and Growing Industry Clusters	• Provide sufficient land near existing industrial areas to allow for expansion. • Provide suitable sites with characteristics required by such industries to take advantage of industrial clusters in Newberg. • Encourage the reuse/redevelopment of properties in zones allowing business. *(Applicable Comprehensive Plan policies: 1.b., 2.e., 2.g.)*
4. Strong Local Support for Business and Employment Opportunities	• Continue to plan for future employment opportunities by providing suitable sites for industrial (export) and commercial uses. • Continue to work collaboratively with the State, Yamhill County, and local businesses to fund infrastructure and planning necessary to maintain and attract desired employment. • Continue to work with and support the Chehalem Valley Chamber of Commerce. *(Applicable Comprehensive Plan policies: 1.m., 1.n., 1.o., 3.b.)*
5. Proximity to Portland Metropolitan Region	• Continue to work with Metropolitan area partners in promoting the economic advantages of the region. • Provide opportunities for identified regional employment clusters in Newberg. • Continue to advocate for improved access to regional markets, via Highways 99W and 219 and the Interstate. • Continue to maintain rail and air access opportunities. *(Applicable Comprehensive Plan policies: 1.f., 1.o., 2.g.)*
6. Future Newberg-Dundee Bypass	• Continue to work with the Oregon Legislature and State agencies to build political support and ensure funding for the Bypass. • Encourage support, funding and construction of the full Bypass project. *(Applicable Comprehensive Plan policies: 1.o.)*
7. Oregon's Statewide Planning Goals	• Newberg has taken advantage of Oregon's Economic Development Program (Goal 9) by identifying comparative advantages (and disadvantages), targeting export-based employment clusters, identifying and providing for the site requirements necessary to maintain and attract such clusters in Newberg, and coordinating with Yamhill County and affected state agencies to retain and provide services to suitable employment sites. Newberg will continue to coordinate with these agencies. *(Applicable Comprehensive Plan policies: 1.f.)*

Table 12- 14: Strategies to Address Comparative Disadvantages

Disadvantage	Strategy / Action
1. Transportation and Access Issues	• Continue to work with the Oregon Legislature and State agencies to ensure funding for the Newberg-Dundee Bypass. • Continue to advocate for Highway 99W improvements to reduce congestion and maintain regional connectivity. • Continue to work with ODOT for review of all development proposals in areas that may impact a state highway facility. *(Applicable Comprehensive Plan policies: 1.o.)*
2. Lack of Suitable Employment Sites	• Newberg has considered local, regional, state and national economic trends and identified industry clusters that the City has a reasonable likelihood of attracting to the community. • Newberg has also researched and identified the site characteristics demanded by firms within these industry clusters. Newberg is actively planning for a future industrial area that will meet both the industrial site characteristics and the land needs of the city's population over the next 30 years. *(Applicable Comprehensive Plan policies: 2.h., 2.g.)*
3. Limited Suitable Land Supply Outside UGB	• After considering the potential for rural residential exception areas to meet identified site requirements, the City has selected sites on agricultural land that will be reserved for identified employment needs. *(Applicable Comprehensive Plan policies: 2.e., 2.g.)*
4. and 5. Stressed Commercial Sector and Retail Dollar Leakage	• Recruit businesses that can fulfill commercial needs that are currently being unmet locally. • Support small businesses that are adjusting these new retail realities by either focusing on high quality customer service and/or gearing their business plans toward niche markets. • Encourage local retail businesses to improve their online presence. *(Applicable Comprehensive Plan policies: 1.c., 1.i).*
6. Market Pressures on SP Newsprint	• Newberg will continually look for opportunities to work with SP Newsprint to help reduce their operational costs. *(Applicable Comprehensive Plan policies: 2.d.)*
7. Oregon's Statewide Planning Goals	• Newberg will continue to pursue Urban Growth Boundary amendments and Urban Reserve expansions to provide adequate land for future uses. *(Applicable Comprehensive Plan policies: 1.f.)*

Regional Focus

Newberg has recognized the importance of being part of a shared, regional economic vision. *Beyond the Vision: A Strategic Plan for the Chehalem Valley* is a document that was created cooperatively between five governmental entities located within the Chehalem Valley. This document was adopted by the Newberg City Council in January 2005. One section of this document, called *Economy and Employment,* describes the economic future of the area as follows:

> *A diversified economy provides balanced economic opportunities for the residents of the Chehalem Valley. Agriculture and agribusinesses are an important component of the local economy. The natural beauty of the area encourages*

tourism and the wine industry. A carefully targeted retail recapture strategy has encouraged more local shopping and minimized buying outside of the area. Downtown areas are vibrant commercial areas that support the local economy.

Clean industries have been developed using a "campus" design. Plenty of family wage jobs are available for citizens of the area. Tourism is a major economic force, its strengths based on the premise that the Chehalem Valley is 1) the gateway to the wine country; 2) characterized by a clean and comfortable environment; and, 3) offers the historical experience of a friendly, small town and village America in the earlier period of the 20th century. As a destination location for visitors, the community of Dundee now has two small exclusive hotels and bed and breakfast inns. The service industry has expanded, with the health industry and health research being a major provider of employment in this sector of the economy.[43]

Key strategic steps laid out for the *Economy and Employment* section of the plan are as follows:

- Hold a broad community forum on economic development to build consensus.
- Invigorate the Chamber of Commerce Economic Development Committee.
- Seek financial aid in the form of grants.
- Develop community college training programs tailored to the labor force needs of prospective employers.

The regional economic development paradigm is expected to continue in the foreseeable future. Newberg has worked extensively with the Mid-Willamette Valley Council of Governments and the Oregon Business Development Department for many years. With an understanding that Newberg's economic future is likely to be strongly linked with fortunes of the Portland region, the City has recently developed relationships with economic development organizations in the metropolitan area. In the summer of 2004, the City of Newberg joined the Association of Regional Economic Development Partners, Inc. (now the Portland-Vancouver Regional Partners Council for Economic Development.). The Partners is "a public-private partnership that focuses on shared economic priorities and works to implement business retention, expansion, and recruitment as well as marketing strategies and recommendations for policy development. The members are public and private sector economic development professionals in the region who have worked collaboratively for more than 10 years to retain and recruit businesses, and promote the metropolitan region as a vital economic center."

On January 3, 2005, the Newberg City Council passed Resolution No. 2005-2554, which stated the city's support for the framework of the Portland Regional Business Plan of the Regional Economic Development Partners.

[43] *Beyond the Vision: A Strategic Plan for the Chehalem Valley*

Locally Targeted Economic Development Industry Clusters (Target Industries)

The majority of Newberg's economic development efforts should continue to be focused upon supporting existing local businesses. In the economic development profession, there is a general principle call the "80/20 rule", which means that 80 percent of an area's economic development efforts should be dedicated towards the retention and expansion of existing local businesses. In addition, it is often said that "Your good businesses are your competitor's best recruitment prospects!" Therefore, a community should ensure, as much as possible, that their local businesses are content and prosperous, or else they may look elsewhere to do business. In summary, it is far easier, effective and efficient to try to maintain and expand your economy through one's local industries than to attract new ones.

As important as Newberg's retention efforts are for its economic health, recruiting specific new businesses to Newberg such as those listed in the Portland-Vancouver Regional Business Plan and the Newberg EOA is a critical aspect of Newberg's economic development strategy. Some of these businesses can be recruited to strengthen existing clusters within the community. Others are new types of businesses that can be attracted based on combination of three factors: a business' cluster strength in the Portland region; Newberg's close proximity to the metro area, and Newberg's unique high quality of life compared to other communities in the region. The City's business recruitment efforts should be focused on identified strong, traded-sector clusters. These types of businesses will bring new wealth to the community and diversify the local economy, thereby creating an economic base that is stronger and more stable. Table 12- 15 on page 37 lists industries on which Newberg should focus its economic development efforts.

Table 12- 15: Newberg Targeted Industries

Business Cluster	Targeted business types
Manufacturing and Industry	
High Tech Manufacturing	Semiconductors/silicon, imaging & display technology
	Nano & micro technology, cyber-security, health/medical information technology
	Biotech/bioscience (medical devices, bioinfomatics, pharmaceuticals, genomics, anti-virals)
General Manufacturing	Dental equipment
	Metals, machinery, transportation equipment
	Lumber and wood products (value added)
	Sustainable industries (renewable energy, resource efficiency technologies, sustainable building materials, green chemistry)
	Distribution & logistics
	Sports apparel/recreation-related products
Aviation related	Specialty aircraft equipment, aircraft repair, machine shops, small entrepreneur business
Agriculture	Wineries
	Specialty foods and food processing
	Nursery and agricultural products (value added)
Services	Professional services architecture, engineering, legal and financial services, etc.
	Creative services (advertising, public relations, film and video, web/internet content and design)
Health Care	
	Providence Medical Center Expansion, medical offices, senior services
Higher Education	
	Portland Community College campus, George Fox University expansion, high school vocational training and college preparedness, private post-secondary training
Wine/Tourism	
	Wineries and tasting rooms, restaurants, art studios, theater and entertainment, recreation (golf, bowling), conference facilities, specialty retail

Source: Newberg Planning Division

Comprehensive Plan Policies and Recommended Supportive Economic Development Actions

Newberg has developed a vision for the community's economic future. The City of Newberg's adopted Comprehensive Plan includes a list of goals and policies that help shape Newberg's future economy (Section H. The Economy). The following is a list of Newberg's recommended economic development actions and the applicable Comprehensive Plan policies they support. All of the Comprehensive Plan policies are from Section H (The Economy) and support the larger goal "To develop a diverse and stable economic base".

1. Work with the State to "certify" industrial sites to shorten the development time of projects and provide certainty to a business that regulatory and permitting issues will not delay the project's timeline.
   Applicable Comprehensive Plan policies: 1.f., 2.g.

2. Identify and implement cost and time saving measures that improve the development permitting process.
   Applicable Comprehensive Plan policies: 2.d.

3. Develop a financial incentives "toolbox" to recruit new businesses and encourage existing business expansions. The incentives should be applied only after a proposed project has been reviewed by a rigorous analysis that demonstrates a clear benefit to the City.
   Applicable Comprehensive Plan policies: 1.b., 1.g.

4. Maintain a useful economic development website that is easy to navigate and contains substantive content that meets the needs of business.
   Applicable Comprehensive Plan policies: 1.a., 1.g.

5. Work with local, regional and state educational and training resources (private and public) to assist with the workforce training needs of businesses and provide opportunities for workers to voluntarily upgrade their skills. The available workforce pool in the Newberg region is approximately 223,000. The regional workforce is estimated by using the assumption that a 23 minute mean commute time (2000 Census) draws workers from an approximately 15 mile radius from the center of Newberg Oregon is recognized for having an educated workforce, one with good basic work skill sets that allows them to be relatively easily trained.
   Applicable Comprehensive Plan policies: 1.c., 1.f.

6. Gauge the health of local businesses regularly and identify how the City can help resolve issues, when feasible. Focus should be on businesses of the traded-sector and local clusters. Anticipate local problem areas by keeping abreast of regional, national, and international business trends.
   Applicable Comprehensive Plan policies: 1.p.

7. Develop closer ties to organizations/businesses located within the Portland area with a similar interest in regional economic development (e.g. Regional Economic Development Partners, future Portland Economic Development District, etc). However, joining METRO will not be considered. Reevaluate current relationship with Mid-Willamette Valley Community Development Partnership.
   Applicable Comprehensive Plan policies: 1.f.

8. Develop a Downtown Revitalization Master Plan prior to the construction of the Newberg-Dundee Bypass. Identify funding sources necessary to implement the plan.
   Applicable Comprehensive Plan policies: 3.a.

V. Industrial and Commercial Land Needs and Supply

To encourage and accommodate future commercial and industrial growth, Newberg must have developable land readily available with characteristics necessary to be competitive in the regional economic development market. Newberg's Ad Hoc Committee on Newberg's Future recently completed an analysis of the community's future land use needs. That analysis is described in the *Report to Newberg City Council; Recommendations for Newberg's Future*, which was accepted by the Newberg City Council on July 21, 2005. On August 1, 2005, the City Council initiated the amendment process for the comprehensive plan changes recommended in the Report. The following are the Committee's recommendations for commercial and industrial land needs for Newberg's future. These also include updates made in 2009 to reflect development since the time of the report.

Industrial Land Need

Industrial Employment Projections

In 2004, Johnson-Gardner prepared future industrial employment projections based on long-range employment forecasts by the Oregon Employment Department. Employment projections by industry are shown in Table 12- 12 on page 24. In general, the employment projections show growth in all of Newberg's industrial sectors through 2040. Figure 12- 3 below shows the projected cumulative employment growth through the year 2040.

Figure 12- 3: Projected Cumulative Employment Growth, 2005-2040

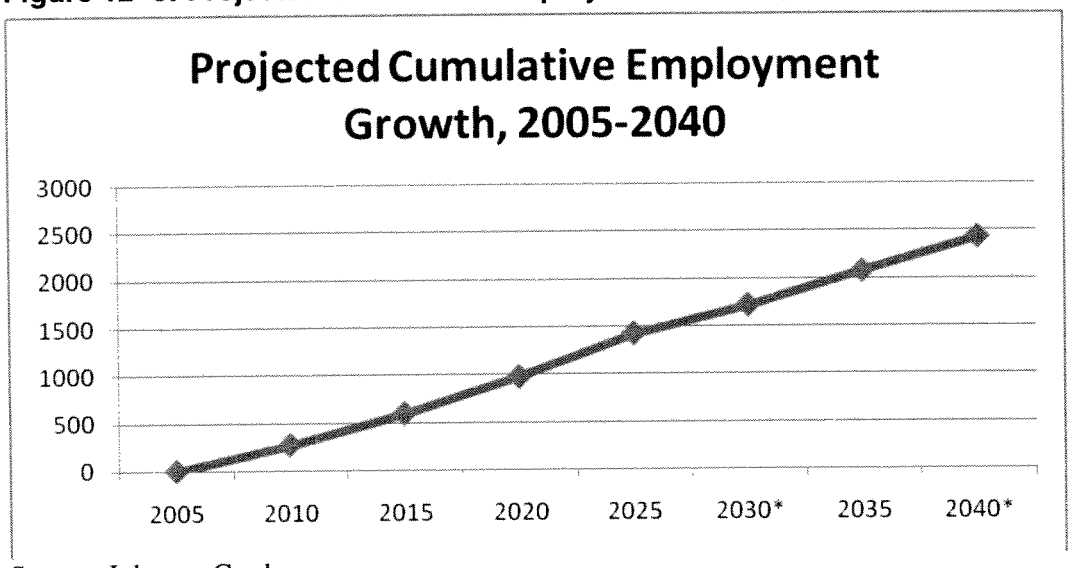

Source: Johnson-Gardner

Industrial Site Requirements

A variety of parcel sizes, building types, and land use designations are required to provide suitable sites to attract targeted industry clusters. In 2005, the *Report to Newberg City Council; Recommendations for Newberg's Future* documented that there was a general lack of suitable large (20+ acre) industrial sites with access to a state highway and physical separation or

transitional buffering from residential neighborhoods. The report documented an additional need for 4-5 large (20+ acre) industrial sites for the period 2005-2025. Industrial land needs for the 2005-2025 period totaled about 216 acres, with an additional 6 sites needed for the period 2026-2040. The assumption was that approximately 50 percent of future industrial employment will take place on large parcels.

In 2009, the Department of Land Conservation and Development (DLCD) encouraged the City to refine its target industries analysis and site needs requirements to determine whether a UGB amendment could be justified. The City has since worked closely with OBDD to refine its industrial site requirements.

This section includes four tables:

1. Table 12- 16 describes average site sizes for targeted industry sectors and clusters;
2. Table 12- 17 arranges targeted industry sectors and clusters into site size ranges and provides examples of existing Newberg industries in those clusters and ranges; and
3. Table 12- 18 associates projected employee growth with site sizes, including redevelopment assumptions, to project a number of needed sites within each site size category.
4. Table 12- 19 describes the site suitability characteristics required for light industrial and Airport-related developments.

Table 12- 16 links targeted industry clusters discussed in this EOA with uses identified in the 2005 *Report to Newberg City Council*. These clusters and uses were allocated site size ranges based on ECONW and a meeting with Oregon Business Development Department (OBDD) representative Tom Fox on September 10, 2009. Site size ranges were verified against OBDD data relating to real firms seeking sites in Oregon, in the targeted industry clusters. Industry clusters containing firms that could potentially require large sites – 10-30 acres or 30-50 acres in size – are identified by the Potential Large Site Category columns. Thirteen industry clusters include firms that could potentially require 10-30 acre sites, and nine include firms that could potentially require 30-50 acre sites.

OBDD reviewed the site size ranges by targeted industry cluster in Table 12- 16 and supports the estimated site sizes and ranges as viable and marketable for Newberg's targeted industries.

Table 12- 16: Site Size Ranges by Targeted Industrial Cluster and Sector

Industry Cluster	Uses	ECO/WB* (Acres)	OBDD** (Acres)	Newberg Examples (Acres)	Potential Large Site Categories	
					10 - 30	30 - 50
High Tech Manufacturing	Electronics, Other	10 - 30	10 - 60	6 - 55	X	X
	Health, Nano/Micro Tech, Cyber Security	5 - 20		6 - 55	X	X
	Bio-Tech/Bioscience/ Pharmaceuticals, Health Services	5 - 40	2 - 60		X	X
General Manufacturing	Dental Equipment	5 - 40		2 - 55	X	X
	Fabricated Metals, Plastics	10 - 20	10 - 20	3 - 7	X	
	Transportation Equipment	10 - 30	10	1	X	
	Industrial Machinery	10 - 20	10 - 20	3 - 6	X	
	Lumber and Wood Products (Value Added)	1 - 10	10	243	X	X
	Sustainable Industries	5 - 25	25 - 200	1 - 7	X	X
	Distribution and Logistics	5 - 60	30 - 60		X	X
	Sports and Recreational Campus	10 - 50			X	X
Airport Related Industrial	Specialty Aircraft Equipment, Aircraft Repair, Machine Shops, Small Entrepreneur Business	1 - 70	70	1 - 3		
Agriculture	Winery			3 - 5		
	Specialty Foods and Food Processing	1 - 10	10 - 150	5	X	X
	Nursery and Ag Products (Value Added)	1 - 10		2 - 13	X	
Services	Professional Services	1 - 5		1 - 2		
	Creative Services, Printing, Publishing	1 - 10		1 - 2		

*ECO/WB: EcoNorthwest and Winterbrook Planning
**Outside Investment Prospects, OECDD (OBDD), Oct 2008

Table 12- 17 below arranges the identified target industry clusters and sectors by potential site sizes, and associates those sizes with existing Newberg industries. As shown in Table 12- 16, some industry clusters and sectors appear in multiple site size categories due to wide potential ranges. Of note, Newberg's existing large industrial sites (A-Dec and SP Newsprint) are over 50 acres in size.

Newberg has an excellent example of a high tech traded-sector manufacturing cluster – three large firms in the dental industry. A-Dec, A.R.E. Manufacturing, and Dental Components Inc. employ slightly over 1,000 people on 67 acres of industrial land. It is not unreasonable for Newberg to assume similar success with another targeted-industry cluster. As such, 10-30 and 30-50 acre sites should be included to provide the City with this opportunity.

Table 12- 17: Targeted Industry Clusters and Sectors by Site Size Ranges and Existing Newberg Industrial Firm Examples

Site Size Range	Industry Clusters/Uses	Newberg Industry Examples
<10 Acres	• Health, Nano/Micro Tech, Cyber Security • Bio-Tech/Bioscience/Pharmaceuticals • Dental Equipment • Fabricated Metals, Plastics • Lumber and Wood Products (Value Added) • Sustainable Industries • Distribution and Logistics • Airport Related Industrial • Winery • Specialty Foods and Food Processing • Nursery and Ag Products (Value Added) • Professional Services • Creative Services	• Climax Portable Machine Tools • PPM Technologies • A.R.E. Manufacturing • Dental Components Inc. • Ushio Oregon • Harris Thermal Transfer Products • Airpark Business Complex
10 – 30 Acres	• Electronics • Health, Nano/Micro Tech, Cyber Security • Bio-Tech/Bioscience/Pharmaceuticals • Dental Equipment • Fabricated Metals, Plastics • Transportation Equipment • Industrial Machinery • Lumber and Wood Products (Value Added) • Sustainable Industries • Distribution and Logistics • Sports and Recreational Equipment Campus • Specialty Foods and Food Processing • Nursery and Ag Products (Value Added)	• Suntron Corporation
>30 Acres	• Electronics • Health, Nano/Micro Tech, Cyber Security • Bio-Tech/Bioscience/Pharmaceuticals • Dental Equipment • Lumber and Wood Products (Value Added) • Sustainable Industries • Distribution and Logistics • Sports and Recreational Equipment Campus • Specialty Foods and Food Processing	• SP Newsprint Company • A-dec, Inc.

Johnson-Gardner prepared future industrial employment and land forecasts in 2004 based on long-range employment forecasts by the Oregon Employment Department. Table 12- 18 links projected 2030 industrial employment[44] with potential site size ranges. While examples can be found of large sites with few employees, and small sites with many employees, larger employers generally require larger sites. This table is one way to address that dynamic while relating projected industrial site needs to adopted employment projections.

The data is based on the assumption that most sites under 10 acres will be located in industrial parks, which will require dedication of an average of 15% right-of-way for streets and utilities. For sites over 10 acres, the table assumes 5% of the area for streets and utilities. The table also includes assumptions that most (55%) of Newberg's future industrial employment will be located on sites 10 acres or less, and that one-third of those future new industrial firms under 10 acres in size, and one-half of firms under 2 acres in size, will find a site through infill redevelopment or intensification of existing employment land uses.

Table 12- 18 shows the 2030 need for approximately 21 acres of very small (under 2 acre) sites, 63 acres of small (2- to 10-acre) sites,[45] two sites in the 10-30 acre range, and one site in the 30- to 50-acre range, for a total industrial site need of 168 gross buildable acres by 2030. These needs for small and medium sites are consistent with recent demand for industrial land in Newberg. From 2005 to 2009, there were 24 acres of industrial land developed. A number of industrial employers expanded or constructed new facilities over that time, including Action Equipment, Climax Portable Machine Tools, Harris Thermal, A-dec, and Freeman Manufacturing. The total land needs equate to approximately 9.5 employees per developed acre, which reflects the reality that many firms look for sites that allow for future expansion, and is consistent with the site size per employee ratio of many of Newberg's largest industrial employers.[46]

Table 12- 18: Site Size Distribution by Firm Employment (2010-2030)

Employees per Firm	Percent of Employment	Number of Employees	Number of Firms	Sites Needed	Size Range (Acres)	Average Site Size (Acres)	Average ROW Need (Acres)	Gross Buildable Acres Needed
0-9	15%	217	36	18	<2	1	0.15	21
10 to 74	40%	578	17	11	2 - 10	5	0.75	63
75 to 150	15%	217	2	2	10 - 30	20	1.00	42
150+	30%	434	1	1	30 - 50	40	2.00	42
Total	100%	1,446	56	32				168

Source: Winterbrook Planning 2009, Newberg Planning Division

In addition, Johnson-Gardner projected 710 additional employees for the period 2031-2040. At

[44] Employment projections extrapolated from Johnson Gardner employment projections adopted into the Newberg Comprehensive Plan in 2005.

[45] Much of this site size need can be most efficiently accommodated by master planned business parks.

[46] Review of site sizes for existing industrial firms with over 50 employees in Newberg determined an average of 4.75 employees per acre. A fully developed site for an employee-rich industrial firm like A-Dec is able to achieve about 16 employees per acre. Firms like A.R.E. Manufacturing, Dental Components Inc., Ushio Oregon Inc., and Harris Thermal Transfer Products come in around 7-14 employees per acre.

an average of 9.5 employees/acre, which is similar to the employee density of firms currently in Newberg, plus 10% of the land area for right-of-way (based on an a mix of small and large sites), this will generate an additional need for 83 gross buildable acres of land for the period 2031-2040. Table 12- 19 shows site suitability characteristics needed for these targeted industries.

Table 12- 19: Required Industrial Site Suitability Characteristics

Required Site Characteristic	Description	Statutory, Rule or Plan Basis
Site Size	• Minimum parcel size 5 vacant acres (or vacant with less than ½ acre occupied by permanent structures) • Group of at least 20 suitable acres as defined below • May include parcels with less than 5 vacant acres if site is currently an industrial use or is vacant and adjacent to industrial use or group of 20 suitable acres • Inventory to include sufficient large sites (10-30 acre and 30-50 acre categories)	ORS 197.712; Goal 14; OAR 660-009-0025; OAR 660-024-0060; Revised Newberg EOA
Topography	Exclude: • Slopes of 10% or greater • Inventoried and protected riparian corridors / wetlands • Areas within the designated Stream Corridor Overlay (which include the 100-year floodplain) • Remaining suitable area contiguous and generally rectangular in shape for efficient development	ORS 197.712; Goal 14; OAR 660-009-0025; OAR 660-024-0060; Revised Newberg EOA
Proximity to Transportation and Services	Include parcels (or group of parcels): • Within, or contiguous to existing UGB to allow for efficient extension of urban services, or as part of group of parcels that could immediately be added to UGB • Adjacent to or within 1/8 mile of a major arterial or state highway access without travel through non-industrial properties. • Provides connection to I-5 via Highway 219 • Site adjacent to Sportsman Airpark necessary for airport-related industrial uses • Adjacent to existing industrial areas, or agglomeration of at least 100 new acres to facilitate agglomeration economies and minimize adverse impacts	ORS 197.712; Goal 14; OAR 660-009-0025; OAR 660-024-0060; Revised Newberg EOA
Compatibility (residential, downtown and resource land)	Exclude sites that: • Abut residential neighborhood on more than 25% of the site perimeter unless effective topographical or road buffers present or planned • Abut large contiguous tracts of agricultural land unless effective topographic or road buffers are present or planned • Result in truck traffic through downtown	ORS 197.712; Goal 14; OAR 660-009-0025; OAR 660-024-0060; Revised Newberg EOA; Goal 14 Locational Factors

Industrial Land and Sites

The comprehensive plan inventory of buildable industrial land was updated in 2009, consistent with the requirement in OAR 660-009-0015 (3) for an inventory of industrial and other employment land. The term "buildable industrial land" as used in this plan is consistent with the terms defined in OAR 660-009-0005 as "total supply" of "vacant" or "developed" industrial land that is "suitable" and "serviceable." Buildable land:

1. Includes lots that have any "Industrial" comprehensive plan designation. This includes land in the "Employment" Springbrook District, specific plan industrial districts, and land in the MIX comprehensive plan district zoned industrial. It excludes publicly owned properties intended for city facilities such as the wastewater treatment plant expansion, which are counted in the "public/quasi-public" category.
2. Includes lots that are:
    a. equal to or larger than one half-acre not currently containing permanent buildings or improvements; or
    b. between one-half and five acres that are likely to be redeveloped during the planning period.
    c. equal to or larger than five acres where less than one half-acre is occupied by permanent buildings or improvements.
3. Excludes portions of lots within stream corridors, with slopes over 10 percent, or currently occupied by buildings or industrial uses, or contained within the Newberg-Dundee bypass "build design alternatives options" published August 2008.

Table 12- 20 shows the existing buildable industrial land in the UGB as of 2009. Figure 12- 4 is a map of the buildable industrial land in the UGB in 2009.

Table 12- 20: Buildable Industrial Land in Newberg UGB (2009)

Location	Potential Uses	Buildable Acres	Site Sizes				
			< 2 ac.	2-10 ac.	10-30 ac.	30-50 ac.	Total
Springbrook Employment	Light Manufacturing or Industrial Office	23		1	1		2
Sportsman Airpark[47]	Airport Industrial	22	2	4			6
Wynooski Industrial	Light Industrial	9	1	2			3
Elliot Road Industrial	Light Manufacturing or Industrial Office	1	1				1
Total		55	4	7	1		12

Source: Newberg Planning Division

The current UGB has approximately 55 buildable industrial acres. Newberg's existing industrial land supply is mostly contained within two industrial/employment park areas: approximately 23 buildable acres zoned SD/E (Springbrook District Employment) in the Springbrook area and approximately 22 vacant acres near the Sportsman Airpark. There are also about 10 acres of buildable industrial land scattered throughout the City on individual lots.

[47] The Sportsman Airpark contains one large 55-acre property that contains the existing airport, plus approximately 10.8 acres of buildable industrial land. The approved Sportsman Airpark Master Plan includes a plan for developing the buildable industrial land into an industrial park with aviation related uses. This site was counted in the 2-10 acre category, even though it contains slightly over 10 acres of buildable land, because the approved master plan envisions further division, and the aviation related uses are more likely to be separate smaller firms rather than one large firm.

Figure 12- 4: Buildable Industrial Land, Newberg UGB 2009

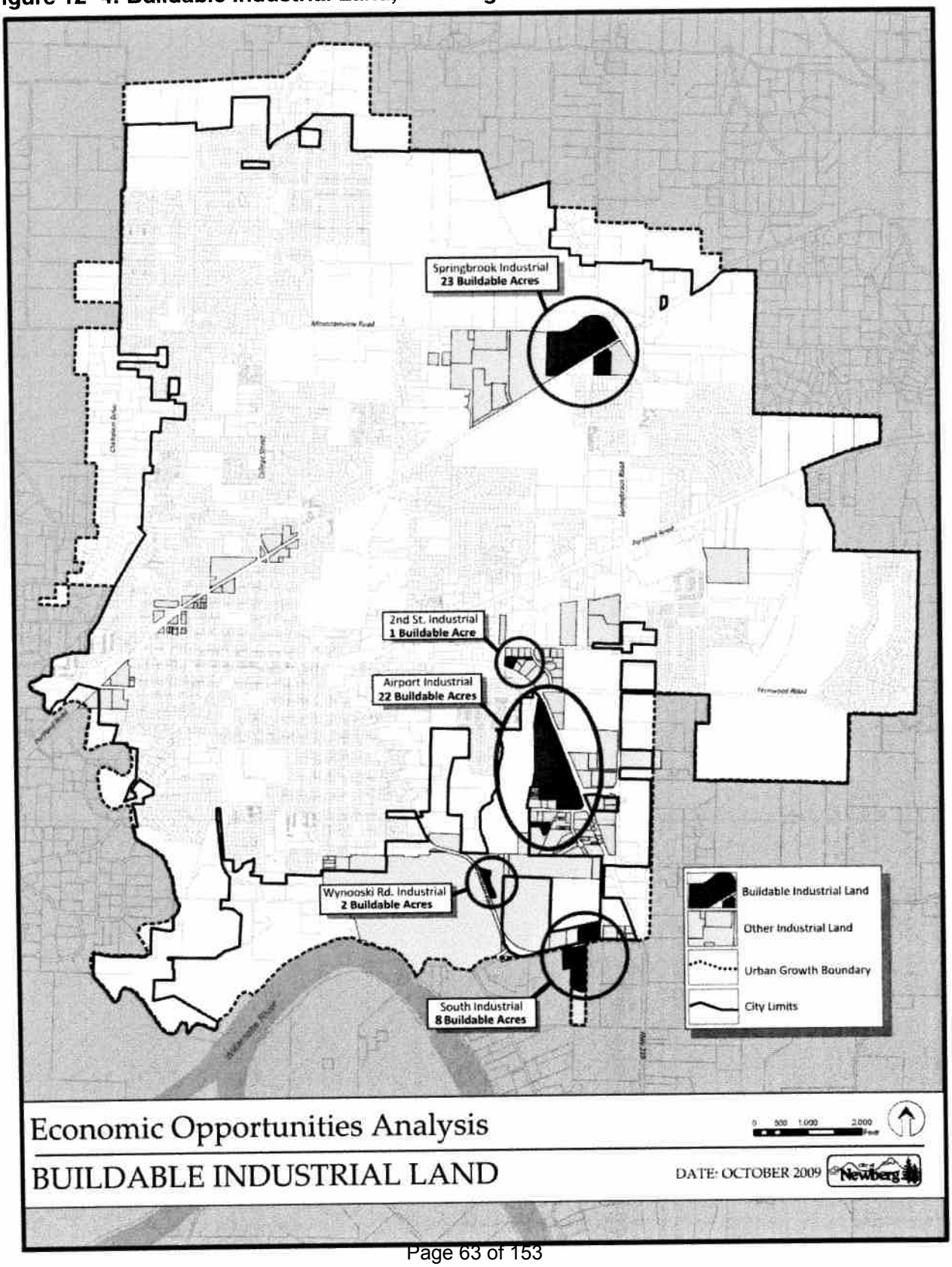

2030 Industrial Site Need vs. Supply

As shown in Table 12- 21, Newberg has an unmet need for one 30- to 50-acre site, two 10- to 30-acre sites, 33 acres of 2- to 10-acre sites, and 16 acres of sites under 2 acres in size.

Table 12- 21: 2010-2030 Industrial Land Supply and Need

Size Range (Acres)	Number of Sites - 2009 UGB	Buildable Acres - 2009 UGB	2010-2030 Needed Sites	2010-2030 Needed Buildable Acres	2010-2030 Deficit # of Sites	2010-2030 Deficit Buildable Acres
<2	5	6	18	21	(14)	(15)
2 to 10	7	30	11	63	(4)	(33)
10 to 30	1	20	2	42	(1)	(22)
30 to 50	0	0	1	42	(1)	(42)
Total	13	56	32	168	(20)	(112)

Source: Winterbrook Planning, City of Newberg

This means that Newberg's UGB should be expanded by approximately 112 buildable industrial acres to include:

1) A 30- to 50-acre site;
2) A 10- to 30-acre site; and
3) Industrial park sites totaling approximately 48 buildable acres.

In addition, for the period 2031-2040, Newberg will need an additional 83 acres of buildable industrial land. This need has not been divided by site size, but is likely to be similar to the site needs distribution for the 2010-2030 period. The best approach would be to reserve sufficient land in the urban reserve to meet this acreage need, then include suitable land in the UGB as needs arise.

Commercial Land Need

Commercial Land Need

As Newberg's population grows, so will its needs for commercial land. Additional population will bring additional retail, office, and other commercial opportunities. In 2004, Johnson-Gardner prepared a preliminary forecast for the need for office and retail commercial land. The office land need is a function of employment growth based on long-range forecasts by the Oregon Employment Department. The retail land need is a function of household growth and typical household spending patterns.

Table 12- 22 below updates adopted commercial land needs for the 2010-2040 timeframe. The table subtracts actual commercial development from 2005-2009 from the land needs projected

by Johnson Gardner, and then redistributes the needs for the 2010-2030 and 2031-2040 time frames. In addition, as an efficiency measure and in support of efforts to promote and redevelop downtown, total commercial land needs have been reduced by 5 acres, assuming infill and redevelopment will occur in the downtown core.

Table 12- 22: Commercial Land Need 2010-2040

Type	2010-2030	2031-2040
Office	20 ac	17 ac
Retail	101 ac	51 ac
Total	121 ac	68 ac

Source: Johnson Gardner, *Industrial & Office Land Need Methodology,* Newberg Planning Division information on development 2005-2009. Numbers include 1 acre of commercial displaced by future Bypass construction.

Commercial Site Requirements

In 2004-05, Newberg prepared the *Report to Newberg City Council; Recommendations for Newberg's Future,* which documented the development form necessary to accommodate identified commercial land needs. As can be seen, most of the commercial growth is expected to occur within Newberg's existing commercial areas. Newberg has many commercial opportunities in its downtown core. The Newberg Downtown Revitalization Committee is actively working on projects to revitalize the downtown commercial core, including the addition of a new downtown gateway sign, a downtown demonstration block, and efforts to publicize available public parking areas. There is currently approximately 1 buildable acre in the downtown core; however, it can be assumed that redevelopment, infill, and intensification of uses in the downtown core will contribute an additional 5 total acres of buildable land supply through 2040.

In addition, Newberg will need to provide large parcels for shopping centers. The Urban Land Institute has identified three types of shopping centers that potentially could be developed in communities such as Newberg: neighborhood centers, community centers and regional centers. A large regional shopping center is not consistent with Newberg's desire to maintain a small town feeling and have a complete community rather than a bedroom suburb; therefore, smaller neighborhood and community shopping centers are preferred.

Newberg needs to ensure that there is an adequate supply of sites with appropriate characteristics for smaller neighborhood and community shopping centers in terms of size, access, and location. Under this approach, future land needs will include needs for 2-3 community centers (10-15 acres each) and 2-3 smaller neighborhood centers (3-5 acres) through 2040. The smaller neighborhood commercial centers should be scattered throughout the community to provide goods and services near where people live and reduce the need to drive into the central area for basic needs.

Table 12- 23: Required Commercial Site Suitability Characteristics

Required Site Characteristic	Description
Site Size	• For neighborhood centers – 3 acres minimum • For community centers – 10 acre minimum No more than two separate ownerships
Topography	Exclude: • Slopes of 10% or greater • Inventoried and protected riparian corridors / wetlands • Areas within the designated Stream Corridor Overlay (which include the 100-year floodplain) • Remaining suitable area contiguous and generally rectangular in shape to enable efficient development
Proximity to Transportation and Services	• For neighborhood centers – access to major collector or minor arterial street at a minimum. • For community centers – access to minor or major arterial.
Compatibility	Exclude sites that: • For community centers, abut residential neighborhood on more than 50% of the site perimeter unless effective topographical or road buffers present or planned

Commercial Land and Sites

The commercial buildable land inventory inside the 2009 Newberg UGB has approximately 120 buildable acres. Newberg has seven main commercial areas. These are shown on Figure 12- 5 on page 52. Table 12- 24 shows the location and amount of buildable land in each area.

Table 12- 24: Buildable Commercial Land in Newberg UGB (2009)

Location	Potential Uses	Buildable Acres	Parcels over 5 Acres Buildable
Downtown	Infill Retail and Office Uses	1	0
College/Mountainview Neighborhood Center	Neighborhood or Community Commercial Center	12	1
Springbrook Hospitality and Village	Tourist Retail and Hospitality	25	2
East Portland Road	Community Commercial Center	28	2
Portland Road	Retail and Office	19	1
Riverfront	Tourist Retail and Hospitality	10	0
Providence Drive	Medical Offices	25	2
Total		**120**	**8**

2030 Commercial Site Need and Supply

Overall, Newberg has nearly an adequate supply of commercial land to meet needs through 2030. The overall land supply is weighted toward medical office land (Providence Drive) and tourist commercial land (Springbrook and Riverfront), and less toward general retail land. There is land for two community commercial centers. There is an overall deficit of 6 acres of retail commercial land.

Table 12- 25: Commercial Land Supply and Need

Type	2010-2030	Land in 2009 UGB	Surplus or (Deficit)	2031-2040
Office	**20**	25	5	**17**
Retail	**101**	95	(6)	**51**
Total	**121**	120	(1)	**68**

Source: Newberg's Ad Hoc Committee on Newberg's Future, Newberg Planning Division

There is a need for 68 buildable acres for the time period from 2031-2040. There is a built in assumption that approximately 5 acres of the commercial land need will be made up by downtown redevelopment and infill. The remainder of the future commercial land supply should include an additional community commercial center and 2-3 neighborhood commercial centers.

Figure 12- 5: Commercial Areas and Buildable Commercial Land, Newberg UGB 2009

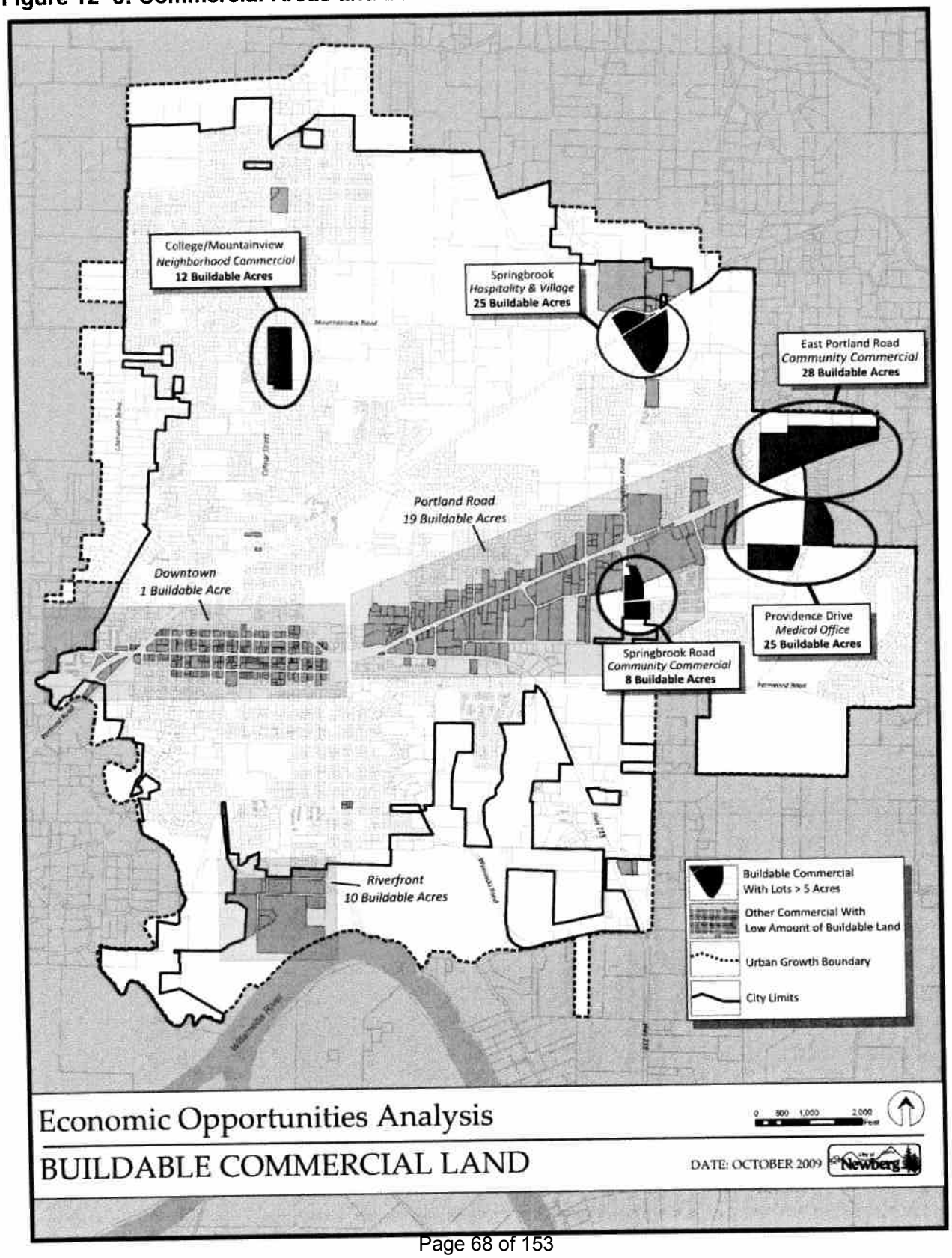

VI. Conclusion

Newberg's economic base has diversified over time and several of its home-grown industries have become national and international leaders in their respective fields. The City is slowly transitioning into more of an urban center for east Yamhill County as the population grows. However, Newberg citizens have made it clear that they value the "live here, work here, shop here" values and way of life. To keep up the City's commitment to the values of its residents, Newberg must strengthen its economic base and provide adequate industrial and commercial land for current and future populations.

The industrial and commercial buildable land supply tables in this report indicate a shortage of both types of land within the current Newberg Urban Growth Boundary. It is critical for economic development efforts to have adequate buildable land available that meets the identified site suitability requirements for both industrial and commercial areas. The City cannot help provide enough jobs for current and future residents without adequate land to locate new businesses on, and without adequate land for existing businesses to expand onto.

Fortunately, Newberg has many advantages that make it stand out in the regional marketplace, including the following:

- Small town quality of life
- Access to quality education and skills training
- Strong established and growing industry clusters
- Strong local support for business and employment opportunities
- Proximity to the Portland Metropolitan Region
- Future Newberg-Dundee Bypass
- Compliance with Oregon's statewide planning goals

In addition, Newberg has easy access to Interstate 5 on its south side for easy access to industrial locations. One of the most important advantages on the list is that Newberg has strong existing and growing industry clusters in the areas of manufacturing, health care, higher education, and wine tourism. Providing additional adequate land for industrial and commercial businesses that are in these same sectors and other compatible sectors will help strengthen Newberg's economic base for the future.

By following the recommended actions in the plan, Newberg can maintain and build a strong economic base to benefit all its citizens.

Exhibit B:
Proposed Comprehensive Plan Amendments
Planning Commission Resolution 2009-275

The following are Comprehensive Plan revisions to implement the revised Economic Opportunities Analysis. Additions to the text are shown as underlined, deletions are shown as ~~strikethrough~~.

***SECTION 1** – Amend the **C. SIGNIFICANCE** section as follows:*

The Urban Growth Boundary will also have an important effect on local residents. The UGB, although only a guide, is intended to provide adequate space for land use needs over a 20-year planning horizon ~~to the year 2010~~ and defines the area within which urban services can be provided. The purpose of the UGB is to contain urban growth within a reasonable area while providing adequate choices for new development locations.

SECTION 2** – Add the following to section **H. THE ECONOMY:

GOAL: To develop a diverse and stable economic base.

POLICIES:

1. **General Policies**

   m. The City shall collaborate with project developers to construct and maintain the best utility systems possible (e.g. water and sanitary sewer), both from a quality as well as quantity (capacity) standpoint.
   n. The City, in cooperation with public and/or private entities, shall invest in the best telecommunications infrastructure possible.
   o. The City shall collaborate with other public and private entities and project developers to construct and maintain the best surface transportation infrastructure possible (e.g. roads, airpark, railroad).
   p. The City shall strive to develop and promote a high quality of life in the community in order to attract and retain a diverse and highly skilled workforce.
   q. The City shall foster an environment of business innovation so that the community may remain economically competitive.

***SECTION 3** – Amend the **POPULATION GROWTH** section as follows:*

A. HISTORIC POPULATION

Newberg grew over ~~400~~ 450 percent from 1960 to 2004~~9~~. This population growth was due to a variety of factors: regional population growth, expansion of industry and business in the area, proximity to other employment centers, and the high quality of life in the area.

Table III-1. Newberg City Population – 1960-~~2004~~2009

Year	Population
1960	4,204
1970	6,507
1980	10,394
1990	13,086
2000	18,064
~~2004~~ 2009	~~19,910~~ 23,150

Sources: U.S. Census, Population Research Center, Portland, State University

~~In addition, approximately 374 people live in the area between the city limits and the urban growth boundary, making the 2004 Newberg UGB population about 20,284.~~ The Portland State University Population Research Center estimated Newberg's population as of July 1, 2009 to be 23,150. As of July 1, 2009, the Urban Growth Boundary has an estimated population of 23,582.

SECTION 4 – Amend the LAND NEED AND SUPPLY section as follows:

A. BUILDABLE LAND INVENTORY

The Newberg Planning Division prepared an inventory of buildable land in the Newberg UGB in 2004, which was updated in November 2009. The buildable land inventory includes vacant and redevelopable land in the existing (2009~~4~~) UGB. This land base is the starting point for determining how much future growth can be accommodated inside the existing UGB and the size of the unmet land need that must be accommodated through zone changes or UGB expansion. Physical constraints such as steep slopes (greater than 25%) and stream setbacks have been deducted from the parcel size, so the buildable land inventory is based on buildable acres, not total acres. In addition, lands that are under development (where a building permit has been issued) are not considered buildable. This inventory also does not include land located within the future right-of-way of the proposed Newberg-Dundee Bypass. In November 2009~~4~~, the Newberg UGB had approximately ~~778~~ 1,071 acres of buildable land ~~inside the UGB~~ (Table IV-1).

Table IV-1. Newberg UGB Buildable Land Inventory (Nov. 2009 ~~2004~~)

Plan Designation	Buildable Land
Low Density Residential	~~359 ac~~ 585 ac.
Medium Density Residential	~~142 ac~~ 132 ac.
High Density Residential	~~13 ac~~ 45 ac.
Commercial	~~105 ac~~ 120 ac.
Industrial	~~159 ac~~ 56 ac.
Park	41 ac.
Institutional	92 ac.
TOTAL	**~~778 ac~~ 1,071 ac.**

Source: ~~Ad Hoc Committee on Newberg's Future (2005), Report to City Council~~ Newberg Planning Division, Buildable Lands Inventory, November 2009

In addition, there is approximately ~~467~~ 381 acres of buildable land within the Newberg Urban Reserve Area. This area does not have any urban comprehensive plan district designations assigned.

B. HOUSING AND RESIDENTIAL LAND NEEDS

1. Housing Needs.

In order to determine the amount of residential land needed, Newberg used Johnson Gardner to create a Housing Needs Analysis. That analysis examined the demographic, housing cost, and household income data for the City of Newberg to determine the need for specific housing types: single-family, multi-family, and manufactured homes. Two adjustments were made to the Johnson Gardner residential land need analysis:

- ~~Development projects that were in the land use approval process during the preparation of the needs analysis were subtracted from the overall 2005-2025 need.~~
- 49 dwelling units displaced by the proposed Newberg-Dundee Bypass were added to the housing need.
- As an efficiency measure, 1 percent of dwellings were allocated to mixed-use developments in non-residential areas, such as upper floor dwellings in commercial areas.

The result is the future housing needs projections shown in Table IV-2. The tables below were updated in 2009 to reflect needs for the periods 2010-2030 and 2031-2040.

~~**Table IV-2. Future Housing Need by Housing Type (number of dwelling units)**~~

	~~Single Family~~		~~Multi-Family~~		~~Manufactured~~		
	~~Detached~~	~~Attached~~	~~Medium Density~~	~~High Density~~	~~Parks~~	~~Subdivision~~	~~Total~~
	~~50%~~	~~7%~~	~~15%~~	~~23%~~	~~2%~~	~~2%~~	~~100%~~
~~**2005 to 2025**~~	~~3,377~~	~~492~~	~~1,022~~	~~1,533~~	~~140~~	~~140~~	~~6,704~~
~~**2026 to 2040**~~	~~3,234~~	~~471~~	~~978~~	~~1,467~~	~~135~~	~~135~~	~~6,420~~
~~**Total**~~	~~6,611~~	~~963~~	~~2,000~~	~~3,000~~	~~275~~	~~275~~	~~13,124~~

Source: Johnson Gardner

Table IV-2. Future Housing Need by Housing Type (number of dwelling units)

	Single Family		Multi-Family		Manufactured			
	Detached	Attached	Medium Density	High Density	Parks	Sub-division	Mixed-Use	Total
	50%	7%	15%	23%	2%	2%	1%	100%
2010-2030	3,796	531	1,139	1,746	152	152	76	7,592
2031-2040	2,190	307	657	1,007	88	88	44	4,380
Total	5,986	838	1,796	2,754	239	239	120	11,972

Source: Johnson Gardner

The residential land need is determined by assigning each housing type to a comprehensive plan designation – low density residential (LDR), medium density residential (MDR), and high density residential (HDR) (Table IV-3).

Table IV-3. Housing Types by Plan and Zone Category

Single Family		Multi-Family		Manufactured	
Detached	**Attached**	**Medium Density**	**High Density**	**Park**	**Subdivision**
80% LDR 20% MDR	MDR	MDR	HDR	MDR	~~LDR~~ MDR
80% R-1 20% R-2 ~~1~~	R-2	R-2	R-3	R-2	R-2 ~~1~~

Source: Johnson Gardner

Table IV-4 presents the 2010-2030 ~~2025~~ and 2031-2040 housing unit need by comprehensive plan designation.

Table IV-4. Adjusted Housing Unit Need

~~Plan Designation~~	~~Units Needed 2005-2025~~	~~Units Needed 2026-2040~~
~~LDR~~	~~2,691~~	~~3,234~~
~~MDR~~	~~1,556~~	~~1,719~~
~~HDR~~	~~1,473~~	~~1,467~~
~~**TOTAL**~~	~~**5,720**~~	~~**6,420**~~

Plan Designation	**Units Needed 2010-2030**	**Units Needed 2031-2040**
LDR	3,037	1,752
MDR	2,733	1,577
HDR	1,746	1,007
TOTAL	**7,516**	**4,336**

2. Planned Residential Densities

Table IV-5. Planned Residential Densities

		Recent Trends	**Planned Density**
Single Family	**Units/Gross Acre**	3.6	4.4
	Average Lot Size	9,800 sf	8,000 sf
Med Density Multi-Family	**Units/Gross Acre**	5.8	9
	Type	Single Family	Townhouses and Duplexes
High Density Multi-Family	**Units/Gross Acre**	15.4	16.5
	Type	2 story apts with surface parking	2-3 story apts with surface parking
Average	**Units/Gross Acre**	5.4	6.8
	Units/Net Acre	6.8	8.5 ~~3~~

3. Residential Land Need

The total amount of residential land needed for housing was calculated by dividing the dwelling units needed by the planned residential densities. The total buildable residential land needs through ~~2025~~ 2030 and 2040 are shown in Table IV-6.

Table IV-6. Buildable Residential Land Need

~~Plan Designation~~	~~Density (du/ac.)~~	~~Dwelling Units Needed (2005-2025)~~	~~Buildable Acres Needed (2005-2025)~~	~~Dwelling Units Needed (2026-2040)~~	~~Buildable Acres Needed (2026-2040)~~
~~LDR~~	~~4.4~~	~~2,691~~	~~612~~	~~3,234~~	~~735~~
~~MDR~~	~~9~~	~~1,556~~	~~173~~	~~1,719~~	~~191~~
~~HDR~~	~~16.5~~	~~1,473~~	~~89~~	~~1,367~~	~~83~~
~~Total~~		~~5,720~~	~~874~~	~~6,320~~	~~1,009~~

Plan Designation	Density (du/gross ac.)	Dwelling Units Needed (2010-2030)	Buildable Acres Needed (2010-2030)	Dwelling Units Needed (2031-2040)	Buildable Acres Needed (2030-2040)
LDR	4.4	3,037	690	1,752	398
MDR	9	2,733	304	1,577	175
HDR	16.5	1,746	106	1,007	61
Total		**7,516**	**1,100**	**4,336**	**634**

4. Residential Land Need and Supply

Comparing the residential land need the current supply, the City has a deficit of residential land to meet needs through 2030~~2025~~ in all residential categories. It also has a deficit of land within the URA to meet the needs from ~~2026-2040~~ 2031-240. Table IV-7 compares the amount of residential land with the available supply.

Table IV-7: Buildable Residential Land Needs vs. Supply

~~Plan Designation~~	~~Buildable Acres Needed 2005-2025~~	~~Buildable Acres in UGB (2004)~~	~~Surplus (Deficit) for 2005-2025~~	~~Buildable Acres Needed 2026-2040~~
~~LDR~~	~~612~~	~~359~~	~~(253)~~	~~735~~
~~MDR~~	~~173~~	~~142~~	~~(31)~~	~~191~~
~~HDR~~	~~89~~	~~13~~	~~(76)~~	~~83~~
~~Total~~	~~874~~	~~514~~	~~(380)~~	~~1009~~

Plan Designation	Buildable Acres Needed 2010-2030	Buildable Acres in UGB (2009)	Surplus (Deficit) for 2010-2030	Buildable Acres Needed 2031-2040
LDR	690	359	(253)	398
MDR	304	142	(31)	175
HDR	106	13	(76)	61
Total	**1,100**	**514**	**(380)**	**634**

C. COMMERCIAL LAND NEED AND SUPPLY

1. Commercial Land Need

As Newberg grows, so will its needs for commercial land. Additional population will bring additional retail, office, and other commercial opportunities. In 2004, Johnson-Gardner prepared a preliminary forecast for the need for office and retail commercial land. ~~Johnson-Gardner prepared a forecasts the need for office and retail commercial land (Table IV-6).~~ The office land need is a function of employment growth based on long-range forecasts by the Oregon Employment Department. The retail land need is a function of household growth and typical household spending patterns.
Table IV-8 below updates adopted commercial land needs for the 2010-2040 timeframe. The table subtracts actual commercial development from 2005-2009 from the land needs projected by Johnson-Gardner, and then redistributes the needs for the 2010-2030 and 2031-2040 time frames. In addition, as an efficiency measure and in support of efforts to promote and redevelop downtown, total commercial land needs have been reduced by 5 acres, assuming infill and redevelopment will occur in the downtown core.

~~**Table IV-8. Commercial Land Need**~~

~~**Type**~~	~~**2005-2025**~~	~~**2026-2040**~~
~~Office~~	~~15 ac~~	~~27 ac~~
~~Retail~~	~~96 ac~~	~~82 ac~~
~~**Total**~~	~~**111 ac**~~	~~**109 ac**~~

~~Source: Johnson Gardner~~

Table IV-8: Commercial Land Need 2010-2040

Type	**2010-2030**	**2031-2040**
Office	20 ac	17 ac
Retail	101 ac	51 ac
Total	**121 ac**	**68 ac**

Source: Johnson Gardner, Industrial & Office Land Need Methodology, Newberg Planning Division information on development 2005-2009. Numbers include 1 acre of commercial displaced by future Bypass construction.

2. Commercial Land and Sites

The commercial buildable land inventory inside the 2009 Newberg UGB has approximately 120 buildable acres. Newberg has seven main commercial areas. Table shows the location and amount of buildable land in each commercial area.

Table IV-9: Buildable Commercial Land in Newberg UGB (2009)

Location	Potential Uses	Buildable Acres	Parcels over 5 Acres Buildable
Downtown	Infill retail and office uses	1	0
College/Mountainview Neighborhood Center	Neighborhood or community commercial center	12	1
Springbrook Hospitality and Village	Tourist retail and hospitality	25	2
East Portland Road	Community commercial center	28	2
Portland Road	Retail and office	19	1
Riverfront	Tourist retail and hospitality	10	0
Providence Drive	Medical Offices	25	2
Total		**120**	**8**

~~2.~~ 3. Commercial Land Supply

Overall, Newberg has nearly an adequate supply of commercial land to meet needs through 2030. The overall land supply is weighted toward medical office land (Providence Drive) and tourist commercial land (Springbrook and Riverfront), and less toward general retail land. There is land for two community commercial centers. There is an overall deficit of 6 acres of retail commercial land.

Table IV-10: Commercial Land Supply and Need

Type	2010-2030	Land in 2009 UGB	Surplus or (Deficit)	2031-2040
Office	**20**	25	5	**17**
Retail	**101**	95	(6)	**51**
Total	**121**	120	(1)	**68**

Source: Newberg's Ad Hoc Committee on Newberg's Future, Newberg Planning Division

There is a need for 68 buildable acres for the time period from 2031-2040. There is a built in assumption that approximately 5 acres of the commercial land need will be made up by downtown redevelopment and infill. The remainder of the future commercial land supply should include an additional community commercial center and 2-3 neighborhood commercial centers.

~~The commercial buildable land inventory inside the current Newberg UGB has approximately 105 acres, but consists mostly of small, scattered sites, with only 3 parcels larger than 5 acres. Overall, Newberg has a deficit of commercial land through 2025. Appropriate land will need to be designated commercial to meet future needs, through some combination of changing the plan designation of lands within the UGB and/or adding additional land to the UGB. To meet the commercial land needs through 2040, additional land will need to be designated commercial.~~

~~Table IV-9. Commercial Land Need and Supply~~

~~Commerical Land Need 2005-2025 (acres)~~	~~Commercial Land in UGB (2004)~~	~~2025 Surplus (Deficit) (acres)~~	~~Commerical Land Need 2026-2040 (acres)~~
~~111~~	~~105~~	~~(6)~~	~~109~~

D. INDUSTRIAL LAND NEED AND SUPPLY

1. Industrial Land Need

Johnson-Gardner prepared future industrial land forecasts based on long-range employment forecasts and converted the new jobs to space needs for each employment sector~~(Table IV-10)~~. This forecast is based on a high employment growth scenario consistent with Newberg's economic development goals to bring more family-wage jobs to the area and to avoid becoming a bedroom community.[1] Newberg has identified four "target" industry clusters that are the foundation of its economy: manufacturing, health care, higher education, and the wine/tourism industry. In addition, there are regional "target industries" that can reasonably be attracted to our community.

Newberg's Economic opportunities analysis considered the size and type of sites needed by these target industries. ~~In addition to an~~ As part of the overall supply of buildable land, Newberg needs to have sites available ~~the~~ that meet the specific needs of ~~potential industrial users, so called "target industries".~~ these industries. A variety of parcel sizes, building types, and land use designations are required to attract target industries and provide market choice. Economic trends indicate that just over half of Newberg's future industrial employment will be located on sites of 10 acres or less. Of those, one-third of the future new industrial firms under 10 acres in size, and one-half of firms under 2 acres in size, will find a site through infill redevelopment or intensification of existing employment uses. The remainder of Newberg's future industrial employment will require larger parcels over 10 acres in size.

Table IV-10: Site Size Distribution by Firm Employment (2010-2030)

Employees per Firm	Percent of Employment	Number of Employees	Number of Firms	Sites Needed	Size Range (Acres)	Average Site Size (Acres)	Average ROW Need (Acres)	Gross Buildable Acres Needed
0-9	15%	217	36	18	<2	1	0.15	21
10 to 74	40%	578	17	11	2 - 10	5	0.75	63
75 to 150	15%	217	2	2	10 - 30	20	1.00	42
150+	30%	434	1	1	30 - 50	40	2.00	42
Total	100%	1,446	56	32				168

Source: Winterbrook Planning 2009, Newberg Planning Division

~~Table IV-10. Industrial Land Need~~

	~~2005-2025~~	~~2026-2040~~
~~Industrial~~	~~87 acres~~	~~75 acres~~

~~Source: Johnson Gardner~~

1 Johnson-Gardner (2004), Industrial and office land need

~~In 2005, there is a general lack of suitable large (20+ acre) industrial sites with access to a state highway and physical separation or transitional buffering from residential neighborhoods.Therefore, Newberg needs 4 large (20+ acre) industrial sites for the period 2005-2025 and an additional 6 sites for the period 2026-2040. The assumption is that approximately 50 percent of the future industrial employment will take place on large parcels.~~

2. ~~2025~~ 2030 Industrial Land Supply and Need

The city reviewed and updated the buildable industrial land inventory in 2009, consistent with the requirement in OAR 660-009-0015(3) for an inventory of industrial and other employment land. The term "buildable industrial land" as used in this plan is consistent with the terms defined in OAR 660-009-0005 as "total supply" of "vacant" or "developed" industrial land that is "suitable" and serviceable". Table IV-11 shows the existing buildable land in the UGB as of 2009.

Table IV-11: Buildable Industrial Land in Newberg UGB (2009)

Location	Potential Uses	Buildable Acres	Site Sizes				
			< 2 ac.	2-10 ac.	10-30 ac.	30-50 ac.	Total
Springbrook Employment	Light Manufacturing or Industrial Office	23		1	1		2
Sportsman Airpark[2]	Airport Industrial	22	2	4			6
Wynooski Industrial	Wastewater Plant expansion, light industrial	10	2	2			4
Elliot Road Industrial	Light Manufacturing or Industrial Office	1	1				1
Total		**56**	**5**	**7**	**1**		**13**

The 2009 UGB contains 56 buildable industrial acres. As shown in Table IV-12, Newberg has an identified need for one 30-50 acre site, two 10-30 acre sites, 33 acres of 2-10 acre sites, and 16 acres of sites under 2 acres in size. This means that Newberg's UGB should be expanded by approximately 112 buildable industrial acres to meet the future employment need. This needs to include a 30 to 50 acre site, a 10 to 30 acre site, and industrial park sites totaling approximately 48 buildable acres.

[2] The Sportsman Airpark contains on large 55-acre property that contains the existing airport, plus approximately 10.8 acres of buildable industrial land. The approved Sportsman Airpark Master Plan includes a plan for developing the buildable industrial land into an industrial park with aviation related uses. This site was counted in the 2-10 acre category, even though it contains slightly over 10 acres of buildable land, because the approved master plan envisions further division, and the aviation related uses are more likely to be separate smaller firms rather than one large firm.

Table IV-12: 2010-2030 Industrial Land Supply and Need

Size Range (Acres)	Number of Sites - 2009 UGB	Buildable Acres - 2009 UGB	2010-2030 Needed Sites	2010-2030 Needed Buildable Acres	2010-2030 Deficit # of Sites	2010-2030 Deficit Buildable Acres
<2	5	6	18	21	(13)	(15)
2 to 10	7	30	11	63	(4)	(33)
10 to 30	1	20	2	42	(1)	(22)
30 to 50	0	0	1	42	(1)	(42)
Total	13	56	32	168	(19)	(112)

Source: Winterbrook Planning, City of Newberg

~~The industrial buildable land inventory inside the current UGB has approximately 159 acres. While this may seem to be a large supply, it is disadvantaged by a number of elements. First, it consists mostly of small, scattered sites, with only 8 parcels larger than 5 acres and only 3 parcels that are 20 acres or larger. Second, several sites are hindered because of proximity to residential neighborhoods or other factors. Thus, some of the industrial should be rezoned for other uses. Third, a significant part of the "buildable" land is in fact in industrial use, such as storage yards. Also, the land need is adjusted to account for existing industrial uses that are displaced by the Newberg Dundee Bypass.~~

~~**Table IV-11. 2025 Industrial Land Supply and Need**~~

~~Industrial Site Size~~	~~2025 Need~~	~~Supply~~	~~Surplus/(Deficit)~~
~~Small/Medium sites (< 20 ac)~~	~~50 ac~~	~~99 ac~~	~~49 ac~~
~~Large sites (20+ ac)~~	~~100 ac~~	~~60 ac~~	~~(40) ac~~

~~Inside the current UGB, the only one large site (20 acres) that is viable in the long term is at the Sportsman Airpark. Two other sites are better suited for other uses long term. Therefore, Newberg needs to look to add additional industrial land to its UGB.~~

3. 2040 Industrial Land Supply and Need

Johnson-Gardner projected 710 additional employees for the period 2031-2040. Continuing the same average of 9.5 employees/acre, consistent with the size of current firms in Newberg, plus 10% of the land area percent for right-of-way (based on an a mix of small and large sites), this will generate an additional need for 83 gross buildable acres of land for the period 2031-2040.

~~The period 2025-2040 will have additional needs for industrial lands. There is projected to be a need for 37 acres of additional small/medium sites. In addition, there will be a need for six large industrial sites (20 acres each).~~

~~**Table IV-12. 2026-2040 Industrial Land Supply and Need**~~

~~Industrial Site Size~~	~~2026-2040 Need~~
~~Small/Medium sites (< 20 ac)~~	~~37 ac~~
~~Large sites (20+ ac)~~	~~120 ac~~

E. INSTITUTIONAL LAND SUPPLY AND NEED

Newberg has estimated the land need for public and quasi-public institutional uses based on consultation with the Newberg School District, the Chehalem Park and Recreation District, Portland Community College, George Fox University, private schools, and per capita needs based on the future population forecast (Table IV-12).[3]

Table IV-13. Summary of Institutional Land Needs (buildable acres)

Category	~~2025~~ 2010-2030	~~2040~~ 2031-2040
Schools	~~85~~ 128 acres	~~105~~ 76 acres
Parks	~~85~~110 acres	~~115~~ 85 acres
Other	~~79~~ 96 acres	~~128~~ 56 acres
Total	**~~249~~ 341 acres**	**~~348~~ 216 acres**

School needs for the 2010-2030 period include needs for one alternative high school (3-5 acres), two elementary schools (10-12 acres), one middle school (redevelop approximately 8 acres of existing 16 acre site), one high school and academic campus (30-50 acres), one or more private schools (30 acres), George Fox University athletic facilities (22 acres on currently owned site), and a Portland Community College Campus (15 acres). Veritas owns a site for a school on North College Street (5 buildable acres), George Fox University owns the athletic field site (22 acres), and Portland Community College is nearing acquisition of a site for its campus (15 acres). As an efficiency measure, total land needs were calculated using the low end of each range, effectively reducing land needs by 15 to 20%.

Parks needs for the 2010-2030 period include needs for four to six new neighborhood parks, two to three community parks, and one city-wide park. Chehalem Park and Recreation District owns one site along Hess Creek at the end of Corinne Drive for either a large neighborhood park or small community park. The old landfill site in the riverfront area could meet the need for a city-wide park.

Other institutional needs include needs for city and public facilities, religious institutions, cemeteries, and miscellaneous private facilities. City and public facilities needs include needs for water and wastewater plant expansions, reservoirs, fire and police stations, and park and ride lots. Needs for City and public facilities include 45 acres for the 2010-2030 period and 25 acres for the 2030-2040 period. Newberg recently purchased a parcel with approximately 13 buildable acres for a wastewater treatment plant expansion, an animal shelter, and a possible public works yard.

Needs for religious institutions, cemeteries, and other private institutions were projected based on current land to population ratios. Religious institutions are projected to need 44 acres for the period 2010-2030. Cemeteries and private facilities are projected to need 7 acres for the period 2010-2030.

Public and semi-public institutions (schools, parks, churches, etc.) are often located in or near residential neighborhoods. These facilities are often developed on residential land and are only zoned for public uses after they have been acquired by the institution for a specific purpose. Newberg has not designated specific parcels for future institutions without the consent of the property owner and/or the institution. At the same time, Newberg needs to ensure an adequate supply of land for future growth of the community as complete neighborhoods with housing, parks, schools and churches. In order to provide an adequate supply of land, some of the institutional uses may locate on infill sites within the UGB and would take

3 Ad Hoc Committee on Newberg's Future (2005), Report to Newberg City Council

away from the residential or other land supply. Additional unmet need will have to be satisfied in the future growth.

For the 2031-2040 period, institutional needs were projected simply by extending the same ratio of land to population as projected for the 2010-2030 period.

Table IV-14. 2031-2040 Institutional Land Needs (Buildable Acres)

Projected population growth 2010-2030	18,373
Institutional land needs 2010-2030	339 acres
Institutional land needs per 1,000 population	18.5 acres
Projected population growth 2030-2040	11,227
Projected institutional land needs 2030- 2040	207 acres

F. SUMMARY OF LAND NEEDS

Table IV-154summarizes the future land needs for the Newberg urban area.

~~**Table IV-14. Future Land Needs and Supply, Newberg Urban Area**~~

~~**Plan Designation**~~	~~**Buildable Acres Needed 2005-2025**~~	~~**Buildable Acres in UGB (2004)**~~	~~**Surplus (Deficit) for 2005-2025**~~	~~**Buildable Acres Needed 2026-2040**~~	~~**Buildable Acres In URA (2004)**~~	~~**Surplus (Deficit) 2026-2040**~~
~~**LDR**~~	~~612~~	~~359~~	~~(253)~~	~~735~~		
~~**MDR**~~	~~173~~	~~142~~	~~(31)~~	~~191~~		
~~**HDR**~~	~~89~~	~~13~~	~~(76)~~	~~83~~		
~~**COM**~~	~~111~~	~~105~~	~~(6)~~	~~109~~		
~~**IND**~~	~~50~~	~~99~~	~~49~~	~~37~~		
~~**IND (Large Site)**~~	~~100~~	~~60~~	~~(40)~~	~~120~~		
~~**P**~~	~~85~~	~~0~~	~~(85)~~	~~115~~		
~~**I, PQ, or other Inst.**~~	~~164~~	~~0~~	~~(164)~~	~~233~~		
~~**Total**~~	~~**1,384**~~	~~**778**~~	~~**(606)**~~	~~**1,623**~~	~~**467**~~	~~**(1,156)**~~

Table IV-15: Future Land Needs and Supply, Newberg Urban Area

Use Type	Buildable Acres Needed 2010-2030	Buildable Acres in UGB (2009)	Surplus (Deficit) for 2010-2030	Buildable Acres Needed 2031-2040	Buildable Acres In URA (2009)	Surplus (Deficit) 2031-2040
Low Density Res.	690	585	(105)	398		
Medium Density Res.	304	132	(172)	175		
High Density Res.	106	45	(61)	61		
Commercial	121	120	(1)	68		
Industrial	168	56	(112)	83		
Parks	115	41	(74)	207		
Institutional	224	92	(132)			
Total	**1,728**	**1,071**	**(657)**	**993**	**381**	**(612)**

Exhibit C: Findings to Planning Commission Resolution 2009-275

The revised Economic Opportunities Analysis (EOA) must comply with the Newberg Comprehensive Plan, Statewide Planning Goal 9, ORS 197.638, ORS 197.712 and OAR 660-009-0015. Below are the findings to these criteria.

I. Newberg Comprehensive Plan

Section H. The Economy – *Goal: To develop a diverse and stable economic base.*

Finding: The EOA is considered the "implementation" portion of Section H in the Comprehensive Plan, and as such it strives to implement this goal and its associated policies in Section H of the Newberg Comprehensive Plan. The EOA contains many elements, including information on local and regional targeted industries, the site size and suitability characteristics of those targeted industries, Newberg's comparative advantages and disadvantages, and an economic development strategy with actions to address the comparative advantages and disadvantages to strengthen Newberg's standing in the regional marketplace to attract the targeted industries. The action items found in the EOA are linked back directly to the policies they implement from Section H of the Comprehensive Plan. All of these things combine to work toward meeting the goal of developing a diverse and stable economic base. This goal could not be met without a revised and updated EOA because economic statistics and market forces change over time, requiring constant monitoring and updating for the economic strategy to stay relevant. Therefore, the revised and updated EOA best helps implement this goal of the Comprehensive Plan.

II. Statewide Planning Goal 9: Economic Development – To provide adequate opportunities throughout the state for a variety of economic activities vital to the health, welfare, and prosperity of Oregon's citizens.

Comprehensive Plans for urban areas shall:

1. *Include an analysis of the community's economic patterns, potentialities, strengths, and deficiencies as they relate to state and national trends;*
2. *Contain policies concerning the economic development opportunities in the community;*

3. *Provide for at least an adequate supply of sites of suitable sizes, types, locations, and service levels for a variety of industrial and commercial uses consistent with plan policies;*
4. *Limit uses on or near sites zoned for specific industrial and commercial uses to those which are compatible with proposed uses.*

A.1. A principal determinant in planning for major industrial and commercial developments should be the comparative advantage of the region within which the developments would be located. Comparative advantage industries are those economic activities which represent the most efficient use of resources, relative to other geographic areas.

A.2. The economic development projections and the comprehensive plan which is drawn from the projections should take into account the availability of the necessary natural resources to support the expanded industrial development and associated populations. The plan should also take into account the social, environmental, energy, and economic impacts upon the resident population.

A.3. Plans should designate the type and level of public facilities and services appropriate to support the degree of economic development being proposed.

A.4. Plans should strongly emphasize the expansion of and increased productivity from existing industries and firms as a means to strengthen local and regional economic development.

A.5. Plans directed toward diversification and improvement of the economy of the planning area should consider as a major determinant, the carrying capacity of the air, land and water resources of the planning area. The land conservation and development actions provided for by such plans should not exceed the carrying capacity of such resources.

Finding: The EOA is Section 12 (The Economy) of the Inventory of Natural and Cultural Resources, which is the base document that the Comprehensive Plan and its goals and policies is based on. The revised EOA includes the elements required above: an analysis of Newberg's economic patterns, forecasts, comparative advantages and disadvantages (strengths and deficiencies); provisions for an adequate supply of sites of suitable sizes, types, locations, and service levels for a variety of industrial and commercial uses consistent with plan policies; and compatibility requirements that limit uses on or near sites zoned for specific industrial and commercial uses to those which are compatible with proposed uses. The Newberg Comprehensive Plan contains policies concerning the economic development opportunities in the community.

The revised EOA includes a robust discussion of Newberg's comparative advantages and disadvantages related to the regional economic marketplace. Newberg has identified four business clusters that are the foundation of its economy and that economic development efforts will be focused on, including: manufacturing, health care, higher education, and the wine/tourism

industry. The updated buildable land inventories in the revised EOA indicate a shortage of both types of land; the City will make future efforts to remedy this situation to ensure Newberg's economic health. The Comprehensive Plan considers the availability of resources to support a growing population, and has goals and policies to ensure that adequate provisions are made. In addition, the City has a Transportation System Plan, a Sewer Master Plan, a Water Master Plan, and a Storm Drainage Master Plan that detail the type and level of public facilities for current and future developments.

The first strategy of Newberg's economic development efforts focuses on retention and expansion of existing businesses. Several of the home-grown industries that reflect Newberg's four main business clusters have become national and international leaders in their respective fields. The revised EOA details Newberg's commitment to its existing businesses and firms, including a list of strategies and actions that are intended to help Newberg assist its local economic partners.

III. ORS 197.638 Department of Land Conservation and Development may request review by Economic and Community Development Department of local inventory and analysis of industrial and commercial land.

(1) Upon request of the Department of Land Conservation and Development, the Economic and Community Development Department shall review the inventory and analysis of industrial and commercial land, and measures taken to address the land needs, required of certain local governments under ORS 197.712. The review shall address the likely effect of measures developed by a local government on the adequacy of the supply of sites and opportunities to satisfy needs identified under ORS 197.712.

(2) The Land Conservation and Development Commission and the Director of the Department of Land Conservation and Development shall consider the review and any recommendations of the Economic and Community Development Department when determining whether a local government has complied with the statewide land use planning goals and the requirements of ORS 197.712. [1999 c.622 §13]

Finding: Newberg worked closely with its regional Business Development Officer, Tom Fox, from the Oregon Business Development Department (formerly the Oregon Economic and Community Development Department) regarding the analysis of industrial and commercial land needs. Mr. Fox reviewed the information in the revised EOA, including the site size ranges by targeted industry cluster and sector, site size distribution by firm employment, and required site suitability characteristics, and concurs that they are viable for firms seeking sites in Oregon and for Newberg's targeted industries. In addition, he noted that the City should have success in expanding and attracting businesses in the targeted industry clusters if they follow the site size and suitability criteria for development sites (see letter from Tom Fox, dated December 1, 2009 – Attachment 1 to the staff report).

IV. ORS 197.712 Commission duties; comprehensive plan provisions; public facility plans; state agency coordination plans; compliance deadline; rules.

(1) In addition to the findings and policies set forth in ORS 197.005, 197.010 and 215.243, the Legislative Assembly finds and declares that, in carrying out statewide comprehensive land use planning, the provision of adequate opportunities for a variety of economic activities throughout the state is vital to the health, welfare and prosperity of all the people of the state.

(2) By the adoption of new goals or rules, or the application, interpretation or amendment of existing goals or rules, the Land Conservation and Development Commission shall implement all of the following:

(a) Comprehensive plans shall include an analysis of the community's economic patterns, potentialities, strengths and deficiencies as they relate to state and national trends.

(b) Comprehensive plans shall contain policies concerning the economic development opportunities in the community.

(c) Comprehensive plans and land use regulations shall provide for at least an adequate supply of sites of suitable sizes, types, locations and service levels for industrial and commercial uses consistent with plan policies.

(d) Comprehensive plans and land use regulations shall provide for compatible uses on or near sites zoned for specific industrial and commercial uses.

(e) A city or county shall develop and adopt a public facility plan for areas within an urban growth boundary containing a population greater than 2,500 persons. The public facility plan shall include rough cost estimates for public projects needed to provide sewer, water and transportation for the land uses contemplated in the comprehensive plan and land use regulations. Project timing and financing provisions of public facility plans shall not be considered land use decisions.

(f) In accordance with ORS 197.180, state agencies that provide funding for transportation, water supply, sewage and solid waste facilities shall identify in their coordination programs how they will coordinate that funding with other state agencies and with the public facility plans of cities and counties. In addition, state agencies that issue permits affecting land use shall identify in their coordination programs how they will coordinate permit issuance with other state agencies and cities and counties.

(g) Local governments shall provide:

(A) Reasonable opportunities to satisfy local and rural needs for residential and industrial development and other economic activities on appropriate lands outside urban growth boundaries, in a manner consistent with conservation of the state's agricultural and forest land base; and

(B) Reasonable opportunities for urban residential, commercial and industrial needs over time through changes to urban growth boundaries.

(3) A comprehensive plan and land use regulations shall be in compliance with this section by the first periodic review of that plan and regulations. [1983 c.827 §17; 1991 c.612 §17]

Finding: The revised EOA includes a comparative analysis of Newberg's economic patterns, potentialities, advantages and disadvantages. In addition, it features a section that discusses Newberg's industrial and commercial land needs and supply, including site size ranges and

suitability characteristics. The Comprehensive Plan contains policies concerning economic development opportunities in the community and provisions for compatibility with industrial and commercial uses. The City also has several public facility plans, including the Transportation System Plan, the Sewer Master Plan, the Water Master Plan, and the Storm Drainage Master Plan. The revised EOA, with its updated buildable land inventories and other information, provides the basis for the City to meet future urban land needs over time through changes to the urban growth boundary.

V. OAR 660-009-0015 – Economic Opportunities Analysis

Cities and counties must review and, as necessary, amend their comprehensive plans to provide economic opportunities analyses containing the information described in sections (1) to (4) of this rule. This analysis will compare the demand for land for industrial and other employment uses to the existing supply of such land.

(1) Review of National, State, Regional, County and Local Trends. The economic opportunities analysis must identify the major categories of industrial or other employment uses that could reasonably be expected to locate or expand in the planning area based on information about national, state, regional, county or local trends. This review of trends is the principal basis for estimating future industrial and other employment uses as described in section (4) of this rule. A use or category of use could reasonably be expected to expand or locate in the planning area if the area possesses the appropriate locational factors for the use or category of use. Cities and counties are strongly encouraged to analyze trends and establish employment projections in a geographic area larger than the planning area and to determine the percentage of employment growth reasonably expected to be captured for the planning area based on the assessment of community economic development potential pursuant to section (4) of this rule.

(2) Identification of Required Site Types. The economic opportunities analysis must identify the number of sites by type reasonably expected to be needed to accommodate the expected employment growth based on the site characteristics typical of expected uses. Cities and counties are encouraged to examine existing firms in the planning area to identify the types of sites that may be needed for expansion. Industrial or other employment uses with compatible site characteristics may be grouped together into common site categories.

(3) Inventory of Industrial and Other Employment Lands. Comprehensive plans for all areas within urban growth boundaries must include an inventory of vacant and developed lands within the planning area designated for industrial or other employment use.

(a) For sites inventoried under this section, plans must provide the following information:

(A) The description, including site characteristics, of vacant or developed sites within each plan or zoning district;

(B) A description of any development constraints or infrastructure needs that affect the buildable area of sites in the inventory; and

(C) For cities and counties within a Metropolitan Planning Organization, the inventory must also include the approximate total acreage and percentage of sites within each plan or zoning district that comprise the short-term supply of land.

(b) When comparing current land supply to the projected demand, cities and counties may inventory contiguous lots or parcels together that are within a discrete plan or zoning district.

(c) Cities and counties that adopt objectives or policies providing for prime industrial land pursuant to OAR 660-009-0020(6) and 660-009-0025(8) must identify and inventory any vacant or developed prime industrial land according to section 3(a) of this rule.

(4) Assessment of Community Economic Development Potential. The economic opportunities analysis must estimate the types and amounts of industrial and other employment uses likely to occur in the planning area. The estimate must be based on information generated in response to sections (1) to (3) of this rule and must consider the planning area's economic advantages and disadvantages. Relevant economic advantages and disadvantages to be considered may include but are not limited to:

(a) Location, size and buying power of markets;

(b) Availability of transportation facilities for access and freight mobility;

(c) Public facilities and public services;

(d) Labor market factors;

(e) Access to suppliers and utilities;

(f) Necessary support services;

(g) Limits on development due to federal and state environmental protection laws;

(h) Educational and technical training programs.

(5) Cities and counties are strongly encouraged to assess community economic development potential through a visioning or some other public input based process in conjunction with state agencies. Cities and counties are strongly encouraged to use the assessment of community economic development potential to form the community economic development objectives pursuant to OAR 660-009-0020(1)(a).

Finding: The revised EOA contains the information described in sections (1) through (4) of OAR 660-009-0015. Section II of the EOA is the Economic Trends Analysis, which includes the following items: national, state and regional trends; regional economic development industry clusters and target industries; Yamhill County agri-business; regional industrial land availability; Newberg population profile; and Newberg employment characteristics. Newberg has identified four business clusters that are the foundation of its economy – manufacturing, health care, higher education, and the wine/tourism industry – and the majority if its economic development efforts will go into recruitment and expansion of existing businesses. Most businesses associated with Newberg's targeted business clusters have similar site suitability characteristics they need to develop. In the revised EOA, Tables 12-16 through 12-19 and Table 12-23 illustrate the site size ranges by targeted industrial cluster and sector, targeted industry clusters and sectors by site size

ranges and existing Newberg industrial firm examples, site size distribution by firm employment (2010-2030), required industrial site suitability characteristics, and required commercial site suitability characteristics.

The revised EOA includes an inventory of industrial and other employment lands within the urban growth boundary. The buildable land inventories have been updated, and the existing industrial and commercial areas are labeled and discussed in Section IV, Industrial and Commercial Land Needs and Supply. The existing industrial and commercial areas within the UGB are also shown graphically on Figure 12-4, Buildable Industrial Land, and Figure 12-5, Commercial Areas and Buildable Commercial Land.

Section III of the revised EOA is the Assessment of Community Economic Development Potential. This section includes employment projections, Newberg's comparative advantages and disadvantages, and a discussion of Newberg's special opportunities to capitalize on its unique niche geographically and in the regional marketplace. Newberg's comparative advantages and disadvantages include the following:

Advantages:

- Small town quality of life
- Access to quality education and skills training
- Established and growing industry clusters
- Strong local support for business and employment opportunities
- Proximity to the Portland Metropolitan region
- Future Newberg-Dundee Bypass
- Oregon's statewide planning goals

Disadvantages:

- Transportation and access issues
- Lack of suitable employment sites
- Highly parcelized land outside UGB limits ability to meet employment site requirements
- Stressed commercial sector
- Retail dollar leakage due to close proximity to metropolitan area markets
- Market pressures on SP Newsprint
- Oregon's statewide planning goals

Newberg's economic development strategy is discussed in Section IV of the revised EOA. This section includes actions to capitalize on Newberg's comparative advantages and to address the comparative disadvantages.

Attachment 1

business oregon

David Beam, AICP
City of Newberg
Economic Development Planner
414 E. First Street
Newberg, OR 97132

December 1, 2009

David:

I have reviewed the site descriptions by targeted industry cluster (Tables 16 -19 of Newberg's draft Economic Opportunity Analysis). I concur that site sizes and characteristics would be viable for firms seeking sites in Oregon and for Newberg's targeted industries.

Given Newberg's location and current economic base, the City should be able to find success in expanding and attracting businesses of the identified targeted industry clusters, if development sites of the size and character identified in the EOA are made available.

Tom Fox
Business Development Officer
Business Oregon
Oregon Business Development Department

775 Summer St, NE, Suite 200 • Salem, OR 97301-1280
503-986-0123 • fax 503-581-5115 • TTY 800-735-2900 • www.oregon4biz.com

Attachment 2

Jessica Nunley

From: Oulman, Steve [steve.oulman@state.or.us]
Sent: Monday, November 30, 2009 1:51 PM
To: Barton Brierley
Cc: Jessica Nunley; Hogue, Thomas
Subject: Newberg EOA - local file CPTA4-09-001

Barton –

After a brief conversation with Jessica this morning, I reviewed the revised economic opportunities analysis (EOA) sent to us on November 25. It appears that this revised document reflects items you and I talked about on November 19. As such, I don't anticipate that the department will have further comments on this post-acknowledgement plan amendment.

In the revised EOA, staff revised discussion of transportation opportunities and constraints, strengthened and clarified the economic development actions and strategies the city will undertake, clarified that land needs are counted as "gross" acres, and refined the analysis of industrial and commercial land needs for the 20-year planning period as well as an additional need to the year 2040.

We understand that this EOA will provide significant basis for a forthcoming urban growth boundary expansion. Such a proposal likely will be reviewed by the department and LCDC in the manner of periodic review and LCDC may review the EOA plan amendment in the context of evaluating goal compliance of a UGB proposal.

Steven M. Oulman, AICP | Regional Representative, Mid-Willamette Valley
Oregon Department of Land Conservation and Development
635 Capitol Street NE, Suite 150 | Salem, OR 97301-2540
Desk: 503.373.0050 x 259 | Fax: 503.378.5518
steve.oulman@state.or.us | www.oregon.gov/lcd

Attachment 3

From: Roger Currier [mailto:rcurrier@hevanet.com]
Sent: Wednesday, December 02, 2009 9:42 PM
To: Barton Brierley; Dan Danicic
Cc: Matson Haug
Subject: UGB meeting

Planning Commissioners:

Please consider the growth of Newberg's UGB of 2100 acres very carefully. I would question the need for this large of inclusion at this time for many reasons, a couple of which will attempt to write about.

The first is the fact of the decrease in population growth that we and the surrounding cities have seen. Newberg is down to 2.2% and Mac is down to only 1.1% . Given this alone should give you thought as to a need of this size! You are told to consider almost all the easy to build on and easy to service land for the new UGB. So then when it comes time for a future group to do so again it will be very costly because there will be nothing left for easy quick inclusion!

Secondly; the fact of using very large percentage of very prime farmland to pave over that will never produce another fruit,vegetable, or grain crop ever is terrible to think of! Maybe this could lend itself to re-thinking the class of soils involved? Maybe you could delete some of the projection for addition to help save our land? Maybe you could piece meal the growth in several other areas (that cost more to service) to help save what Newberg was and is known for, an agricultural area of diverse farming?

Third would be to ask staff to produce to you a survey of the vacant Industrial and Commercial property that is sitting vacant and unused right now in Newberg. Even the fact that Newberg owns the sewage pre-treatment tank in the North section of town on Illinois Street that could be pumped to and used if needed. Maybe we should be working more at helping to fill and use our vacant resources that we have? Maybe we need to think about building that second and third story on the 2nd street parking lot for other things? Maybe we could build affordable housing on the second or third story and parking on the other one? I am sure that some contractor would love to get into a project like that!

The forth item would be that of what will happen if you accept all this expansion and then the Bypass is not built? We the City, County or even State have no money to build any roads to help move all that traffic that will be projected to use this land! We will have to use our old roads that are falling apart now to try and move all these cars and trucks. WE can only hope that they do not go toward Dundee or McMinnville! I know everyone says that they will build the bypass soon. How many years has soon been stretched out now? Maybe 30 plus that I can recall.

So lets try to keep Newberg what it is known for and what we all moved and live here for. We do not have to do any massive expansion just because we are told that we "might" need it by projections. How often are they really correct? Do we have to believe and go with a trend or can we wait and work toward a plan when we really need it maybe only a year or two in advance with the idea (for infrastructure and planning) that we may use this land then. I am not a NO growth person! But I would like to see Newberg look like what people liked about the area left till we really need it.

Thank You very Much for Your Consideration

Roger Currier
(61 year resident)
Newberg,Oregon

City of Newberg
414 E First Street
P.O. Box 970
Newberg, OR 97132

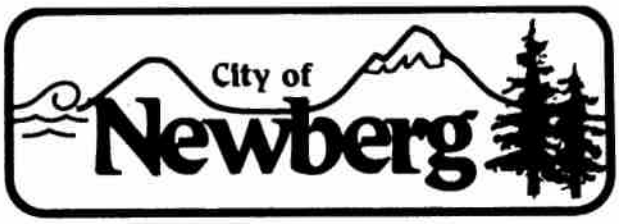

City Manager
(503) 538-9421
(503) 538-5013 Fax

Planning and Building Department

P.O. Box 970 ▪ 414 E First Street ▪ Newberg, Oregon 97132 ▪ (503) 537-1240 ▪ Fax (503) 537-1272

CITY OF NEWBERG
DEVELOPMENT CODE AMENDMENT
STAFF REPORT

FILE NO: GEN FILE 09-007

REQUEST: Amend the Newberg Development Code to support affordable housing regarding: adding a definition of "special needs housing"; clarifying planning review process for accessory dwelling units; reducing parking requirements near transit stops; increasing the number of lots allowed per driveway; and creating housing design standards.

APPLICANT: City of Newberg

PREPARED BY: City of Newberg Planning Staff

DATE OF HEARING: December 10, 2009

ATTACHMENTS:
Planning Commission Resolution No. 2009-273:
Exhibit A: Proposed Development Code Amendments
1. Comparison of current proposed housing design standards and December 2007 standards
2. Fire Apparatus Access Roads – 2007 Oregon Fire Code
3. *Newberg Affordable Housing Action Plan* (by reference)

SUMMARY

On May 4, 2009, the Newberg City Council passed Resolution No. 2009-2843, accepting the Newberg Affordable Housing Action Plan. One of the recommended actions within the Plan is for the City to consider the adoption of amendments to the Newberg Development Code that are designed to support affordable housing.

On December 10, 2009, the Newberg Planning Commission will hold a public hearing regarding the following proposed development standards intended to help support affordable housing:

- Add a definition regarding "special needs housing";
- Clarify that the planning process for the recommendation that accessory dwelling units be an allowed use in the R-1 and R-P zones instead of the current conditional use would be an administrative Type 1.

- Allow reduction of parking requirements where an affordable housing development is near a transit stop or where the development provides its own transit;
- Modify current driveway standard to allow more than two lots per driveway; and,
- Add design standards for housing that promote the development of attractive, livable, and functional neighborhoods.

The proposed Planning Commission Resolution No. 2009-273 recommends that the City Council adopt these proposed amendments.

BACKGROUND

In recent years, the City of Newberg has been examining the community's future land needs and taking steps to accommodate the anticipated future growth. The City's analysis of future land needs has found that if current housing construction trends continue into the future, lack of affordable housing in Newberg will likely continue to be a significant issue.

On May 8, 2008, the Newberg City Council passed Resolution No. 2008-2781, establishing the Housing for Working Families Ad Hoc Committee. The charge of the Committee was to "... identify and recommend tools appropriate for the Newberg community that are intended to encourage the development of housing for working families." The Committee met twice a month from July 2008 to April 2009 with the goal to create an action plan to support the development and retention of affordable housing. On May 4, 2009, the Committee presented the *Newberg Affordable Housing Action Plan* to the City Council. At that meeting, City Council passed Resolution No. 2009-2843, stating their acceptance of the Plan.

On December 10, 2009, the Newberg Planning Commission will hold a public hearing regarding various proposed *Newberg Development Code* amendments supporting affordable housing. The following describes the proposed changes.

1. **Definition of "special needs housing."** At the November 12, 2009 meeting, the Planning Commission requested that city staff to develop a proposed definition for "special needs housing." The Commission felt this was needed, since at that same meeting, the Commission recommended some new parking requirements for adoption by the City Council that referred to this term. Therefore, city staff would like to propose the following definition for "special needs housing": *Group housing specially designed or adapted for those with particular physical, developmental disability, or social needs.*

2. **Clarify the planning process for construction of accessory dwelling units.** At the last Planning Commission meeting, the Commission recommended that ADUs be allowed as an outright permitted use in the R-1 and R-P zones instead of a conditional use. The Commissioned asked what planning process would be used under this change. Staff recommends that a Type 1 administrative process be used for this type of land use. Decisions on Type I planning application are made by the Planning and Building Director. No public notice or public hearing is required for this process.

3. **Reduce parking requirements for affordable housing projects with nearby transit access.** At the last Planning Commission meeting, the Commission considered changes to off-street parking requirements for affordable housing projects. The proposed changes were derived from Action 4.2G of the *Newberg Affordable Housing Action Plan*. One of the suggested changes under Action 4.2G was inadvertently left off the last meeting's agenda. That suggested change from the *Action Plan* is as follows: *Reduce parking requirements where the development is within 1,500 feet of a transit stop or where the development provides its own transit.*

   City staff performed a brief search on the internet to see if there is a "conventional wisdom" regarding how far people are willing walk to get to a transit stop. From that research, the proposed standard of 1,500 feet appeared to be fairly common standard. However, staff found the quality of that route was also an important factor. In other words, the route pedestrians take must also be safe, such as a continuous sidewalk from the housing to the transit stop. In some

cases, a disconnected sidewalk from a transit stop could be made continuous through the construction of sidewalk in gaps missing from the route. Given this information, staff would like to propose the following development code language: *At the review body's discretion, affordable housing projects may reduce the required off-street parking by 10% if there is an adequate continuous pedestrian route no more than 1,500 feet in length from the development to transit service with and average of less than one hour regular service during the daytime or where the development provides its own transit. A developer may qualify for this parking reduction if improvements on a proposed pedestrian route are made by the developer, thereby rendering it an adequate continuous route.*

4. **Modify current driveway standard to allow more than two lots per driveway.** This recommendation comes from Action 4.2L of the *Newberg Affordable Housing Action Plan.* Prior to 1999, the City allowed 6 lots per driveway. The current standard was established because the Planning Commission felt that driveways connecting multiple lots often experienced issues with cars parking on the relatively narrow driveways. They felt that this situation created a safety issue by limiting the access width of the driveway for public safety vehicles to reach homes in need. By limiting the number of houses per driveway to two, rectification of any parking problem on with the driveway became much simpler by dealing with a person's one and only neighbor. In addition to lowering the number lots allowed on a driveway, the City also eliminated the ability of developers to create new private streets. The Planning Commission felt that private streets projected exclusivity and did not promote a sense of community in Newberg.

   However, the current standard has brought its own set of issues. Access to a piece of property can produce multiple parallel driveways, taking up additional land and therefore driving up cost of housing. Also, multiple parallel driveways require additional landscaping between them, taking up additional valuable land. In addition, these landscaped areas may be difficult to maintain.

   Driveways are often used where access to developable land is not large enough to accommodate a public street (private streets are no longer allowed in Newberg.) The use of driveways instead of public streets is one way to support affordable housing, as driveways are much cheaper to construct than public streets. In addition, private driveways do not have to be maintained by the city, funds that can be put to better use in the community.

   The Planning Commission can recommend to the City Council a standard allowing any number of lots per driveway or recommend no change at all. Staff recommends that any proposed change be between 2 lots per driveway (current standard) and 6 lots per driveway (previous limit.) Staff also recommends that each lot on a driveway must provide an additional off-street parking space, with intent that this action will alleviate the illegal parking issue. In any case, lots will still be required to be large enough to meet current total lot coverage standards and driveways must meet fire access standards and provide required turnarounds (please see Attachment 2.) In addition, staff recommends that any driveway that serves multiple lots must include a maintenance agreement regarding the driveway and its associated landscaping.

5. **Create designs standards that promote the development of attractive, livable, and functional neighborhoods, taking care not to increase costs of housing or reduce the number of dwellings.** This recommendation is Action 4.2J of the *Newberg Affordable Housing Action Plan.* The Affordable Housing Ad Hoc Committee felt that good design need not

necessarily create additional costs. However, care should be taken not to require items that do increase development costs or reduce the amount of housing that can be created. Design standards should provide a wide menu design options to choose from, rather than prescribing that certain elements be used. Some elements which may be feasible in larger developments, such as creating common areas or walking paths, may not be feasible in smaller developments. Thus, the Committee recommended a two-tier approach to design standards: one for smaller and one for larger developments.

The proposed standards provide a menu of choices, such as:

- In larger developments, incorporating pathways or common areas.
- Narrowing driveways to provide greater front yard greenspace and additional on-street parking.
- De-emphasizing the garage on the front façade to promote human scale and feel in the neighborhood.
- Orienting the building and entrances toward the street and minimizing the front setback to promote human scale neighborhoods, neighbor interaction and eyes on the street.
- Using entry features and accents, such as porches or recessed entries, to make buildings inviting.
- Using historical architectural styles to blend with Newberg.
- Varying dwelling designs to create interest and avoid monotony.
- Creating small, useable yards for outdoor living space.
- Adding interest to building architecture by incorporating features such as pitched roofs, contrasting siding materials, and interesting window designs.
- Limiting heights of buildings near neighboring property boundaries.

The proposed design standards were presented to the Planning Commission in a workshop at their July 11, 2009 meeting. Staff has revised the proposed design standards to address comments made by the Commission at that meeting as follows:

- The Commission asked how the points from the residential design system would be applied. Staff is recommending that of the total number of design points required for a project, at least at least 20% of those points should be achieved through the use of subdivision design elements and/or site design elements. In addition, each individual dwelling unit in a project shall achieve at least 3 design points from the building design elements. The intent of this distribution is to ensure that all projects will achieve a more balanced design, having some attention paid to good design of the subdivision, site, and building elements.

- Under the subdivision design elements section, one option to achieve points is through the preservation of natural features on the site. The Commission asked how points would be awarded regarding this option. Staff proposes two options for the Commission. Language for Option 1 would be as follows: *The review body may award design points of 0.1 to 1 point per dwelling unit, base upon the quality of those natural features and relative size of the preserved area to the project.* Option 2 would be as follows: *1 point per 1,000 square feet of natural area, up to 20% of the required design point total.* This language was the same as was proposed in December 2007.

In addition, Commissioner Barnes made a presentation to the Commission on October 8th showing design elements of existing developments in Newberg and nearby communities.

The proposed Planning Commission Resolution No. 2009-273 recommends that the City Council adopt the proposed amendments.

For reference, Attachment 1 compares the current proposed housing design standards to those previously proposed in December 2007.

PRELIMINARY STAFF RECOMMENDATION

The preliminary staff recommendation is made in the absence of public hearing testimony, and may be modified subsequent to the close of the public hearing. At this writing, staff recommends the following motion:

Move to adopt **Planning Commission Resolution 2009-273** which recommends that the City Council adopt the proposed amendments to the Newberg Development Code, as detailed in Exhibit A in the resolution.

PLANNING COMMISSION RESOLUTION NO. 2009-273

A RESOLUTION OF THE PLANNING COMMISSION OF THE CITY OF NEWBERG RECOMMENDING THAT THE CITY COUNCIL AMEND THE NEWBERG DEVELOPMENT CODE STANDARDS REGARDING THE ADDITION OF A DEFINTION OF "SPECIAL NEEDS HOUSING; CHANGE THE PLANNING REVIEW PROCESS FOR ACCESSORY DWELLING UNITS TO TYPE 1; OPTION TO REDUCE PARKING REQUIREMENTS FOR RESIDENTIAL DEVELOPMENTS NEAR TRANSIT; INCREASING THE ALLOWED NUMBER OF LOTS PER DRIVEWAY; AND, CREATION OF NEW HOUSING DESIGN STANDARDS

RECITALS:

1. On May 8, 2008, the Newberg City Council passed Resolution No. 2008-2781, establishing the Housing for Working Families Ad Hoc Committee. The charge of the Committee was to "... identify and recommend tools appropriate for the Newberg community that are intended to encourage the development of housing for working families."

2. On May 4, 2009, the Housing for Working Families Ad Hoc Committee presented the *Newberg Affordable Housing Action Plan* to the City Council. At that meeting, City Council passed Resolution No. 2009-2843, stating their acceptance of the Plan.

3. The *Newberg Affordable Housing Action Plan* recommends that the City should consider the adoption of various amendments to the Newberg Development Code regarding: the addition of a definition of "special needs housing"; change the planning review process or accessory dwelling unit to Type 1; option to reduce parking requirements for residential developments near transit; increasing the allowed number of lots per driveway; and, creation of new housing design standards.

4. On November 25, 2009, notice of a public hearing on the proposed amendments was published in the Newberg Graphic. The same notice was posted in four public places on November 19, 2009 and mailed to interested parties on November 19, 2009.

5. On December 10, 2009, the Newberg Planning Commission held a public hearing on the proposed amendments.

NOW THEREFORE, BE IT RESOLVED by the Planning Commission of the City of Newberg that it recommends that the City Council approve the amendments to the Newberg Development Code as shown in Exhibit A, contingent upon the Planning Commission's review of additional proposed Development Code amendments described in the Newberg Affordable Housing Action Plan.

This recommendation is based on the staff report and testimony.

DATED this 10th day of December, 2009

AYES: NAYS: ABTAIN: ABSENT:

ATTEST:

_____ _____

Planning Commission Secretary Planning Commission Chair

Exhibit A: Proposed Newberg Development Code Amendments

Exhibit A to Resolution 2009-273
Proposed Newberg Development Code Amendments

Editorial Key:

Normal = existing text
~~Strikethrough~~ = proposed text deletion
Underline = proposed text additions

§ 151.003 DEFINITIONS

SPECIAL NEEDS HOUSING. Group housing specially designed or adapted for those with particular physical, developmentally disability, or social needs.

PRIVATE DRIVE. A private way which affords principal means of access to ~~two~~ [three, four, five six] or fewer lots (see also service drive). ***NOTE: Number to be determined by Planning Commission.***

PRIVATE STREET. A private way which affords principal means of access to ~~three~~ [four, five, six, seven] or more lots (see also service drive). ***NOTE: Number to be determined by Planning Commission.***

151.191 SITE DESIGN REVIEW APPLICABILITY.

(A) Applicability of requirements. Site design review shall be required prior to issuance of building permits or commencement of work for all improvements noted below. Site design review permits shall be processed as either a Type I or Type II, as noted below.

(1) Type I.

(a) Single family dwellings;

(b) Duplexes;

(c) Institutional, commercial or industrial additions which do not exceed 1000 square feet in gross floor area;

(d) Multi-family additions which do not exceed 1,000 square feet in gross floor area and do not add any new units, or new construction incidental to the main use on an existing developed site which do not exceed 1,000 square feet in gross floor area and do not add any new units;

(e) Institutional, commercial or industrial interior remodels which do not exceed 25% of the assessed valuation of the existing structure;

(f) Multi-family remodels which do not exceed 25% of the assessed valuation of the existing structure and do not add any new units;

(g) Signs which are not installed in conjunction with a new development or remodel;

(h) Modifications, paving, landscaping, restriping, or regrading of an existing duplex, multi-family, institutional, commercial or industrial parking lot.

(i) Fences and trash enclosures.

(j) Accessory dwelling units.

OFF-STREET PARKING REQUIREMENTS

§ 151.612 PARKING SPACES REQUIRED

Use	Minimum Parking Spaces Required
RESIDENTIAL TYPES	
Dwelling, multiple or two family or single family	2 for each dwelling unit; where fractioned, next highest full unit
Studio or 1 bedroom unit 2 bedroom unit 3 and 4 bedroom unit 5 or more bedroom unit	1 per dwelling unit 1.5 per dwelling unit 2 per dwelling unit 0.75 spaces per bedroom
Unassigned spaces	If a development is required to have more than 10 spaces on a lot then it must provide some unassigned spaces. At least 15% of the total required parking spaces must be unassigned and be located for convenient use by all occupants of the development. The location shall be approved by the Director.
Visitor spaces	If a development is required to have more than 10 spaces on a lot then it must provide at least 0.2 visitor spaces per dwelling unit.
On-street parking credit	On-street parking spaces may be counted toward the minimum number of required spaces for developments required to have more than 10 spaces on a lot. The on-street spaces must be directly adjoining and on the same side of the street as the subject property, must be legal spaces that meet all City standards, and cannot be counted if they could be removed by future street widening or a bike lane on the street.
Dwelling on shared driveway	1 additional space to what is otherwise required in this section.
Available transit service	At the review body's discretion, projects may reduce the required off-street parking by 10% if there is an adequate continuous pedestrian route no more than 1,500 feet in length from the development to transit

	service with and average of less than one hour regular service during the daytime or where the development provides its own transit. A developer may qualify for this parking reduction if improvements on a proposed pedestrian route are made by the developer, thereby rendering it an adequate continuous route.
Commercial Neighborhood District (C-1)	1 for each dwelling
Dwelling, single family or two family	2 for each dwelling unit on a single lot
Fraternities, sororities, cooperatives and dormitories	1 for each three occupants for which sleeping facilities are provided
Hotels, motels, motor hotels, etc.	1 for each guest room
Rooming or boarding houses	1 for each guest room
Special needs housing	1 space per 3 beds or actual parking needs as demonstrated through a parking analysis.

DEVELOPMENT CODE DESIGN STANDARDS

§ 151.195.1 SINGLE FAMILY RESIDENTIAL DESIGN STANDARDS

The purpose of this section is to ensure that residential developments provide good design, provide a healthy and attractive environment for those who live there, and are compatible with surrounding development. As part of the review process, an applicant for a residential subdivision must demonstrate that some of the following site and building design elements, each of which has a point value, have been incorporated into the design of the project. For more information and illustrations of the following design elements, refer to *Newberg Residential Development Design Guidelines (July 1997).*

Developers of attached single family projects, projects with multiple single family dwelling on one lot, or projects with combinations of single family attached, single family detached, and multi-unit developments may elect to use either the standards in § 151.195 or § 151.195.1.

Projects subject to these design standards shall achieve at least the minimum number of design points describe below. Each project shall achieve at least 20% of its required minimum total project design points through the use of subdivision design elements and/or site design elements listed below. Each individual dwelling unit in a project shall achieve at least 3 design points from the building design elements listed below.

Projects of 20 dwelling units or more must achieve at total number of design points equal to 10 design points multiplied by the number of dwelling units (10 points x # of dwelling units).

Projects of 19 dwelling units or fewer must achieve at total number of design points equal to 7 design points multiplied by the number of dwelling units (7 points x # of dwelling units).

Where the applicant is using design elements that will be achieved when future building permits are issued, the applicant shall submit a design sheet with the subdivision preliminary plat that explains which design elements must be incorporated into the dwellings when they are constructed.

The applicant shall develop appropriate Covenants, Codes and Restrictions which include design requirements that meet the standards of this section of the Code to be recorded at the time of final plat.

(A) Subdivision design elements

(1) The project achieves over 80 percent of the target density for the zone. *(5 design points for each dwelling above 80% of target density using the following formula: (Proposed # of dwellings – (Target # of dwellings x 80%)) x 5 points = # points, rounded to nearest whole number.)*

(2) Use public walkways or multi-use paths not adjacent to streets in side yards or common areas connecting to a park or collector or arterial street *(1 design point per 100 linear feet of walkway or path)*

(3) Provide additional on-street parking *(1 design point per on-street parking space provided beyond 1 per unit)*

(4) Use antique street lighting styles as approved by City *(1 design point per lighting fixture used.)*

(5) Use site furnishings to enhance open space. Communal amenities such as benches, gazebos, playground equipment, fountains, and/or common patios enhance the outdoor environment and comprise not less than one-half percent of the estimated construction cost of all building(s). Estimated costs are subject to city review and approval. *(1 design point per $1,000 in furnishings)*

(6) Provide usable common recreational area, including but not limited to play fields, walking trails, exercise circuit, playgrounds, common patios, gardens, and/or similar functional and age-appropriate common facilities, a central green or pocket park(s) in a subdivision. *(1 design point per 500 square feet of area)*

(7) Provide a natural feature and tree preservation/replacement plan, including provisions for its future maintenance. (??? *design points ????*).

(B) Site design elements

(1) Bring dwelling close to street by keeping dwelling at most 25 feet from the front property line. *(1 design point per dwelling)*

(2) Use a single narrow (10 to 14 feet width) driveway per unit, or single shared driveway (20 feet to 24 feet width) for two units *(1 design points per dwelling)*

(3) Provide increased setbacks between buildings. Increase side yard setbacks (perpendicular to street) so that there is minimum 15-foot separation between buildings on at least one side. *(1 design points per separation)*

(4) Provide a useable interior yard or courtyard of at least 1000 square feet. *(1 design point per dwelling)*

(5) Use a uniform front yard fence design for the development. *(1 design point per lot with fence design)*

(C) Building design elements

(1) Use entry features and accents such as distinctive building or paving materials and detailing (e.g., unenclosed and covered porch (minimum depth of 6 feet and minimum width of 8 feet), roof overhang or, recessed entry with distinctive arch or gable, pergola, arbor, pathway pavers, or similar feature) to mark major entries to multi-unit buildings or individual units. *(1 design point per dwelling)*

(2) De-emphasize the garage on the front façade

(a) If on front façade, limit garage to single car entrance (16 feet entrance width or less) *(2 design points per dwelling)*

(b) If on front façade, limit garage to two car entrance (28 feet entrance width or less) *(1 design points per dwelling)*

(c) Garage even with or setback up to 10 feet from front façade of dwelling. *(1 design point per dwelling)*

(d) Garage setback 10-19 feet from front façade of dwelling *(2 design point per dwelling)*

(e) Garage setback 20 or more feet from front façade. *(3 design point per dwelling)*

(f) Garage entrance not facing street. If side of garage faces the street, then windows, doors, shutters, or similar architectural features are placed that comprise at least 20 percent of the side wall, or landscaping that will upon maturity obscure at least 30 percent of the side wall *(2 design point per dwelling)*

(3) Orient buildings toward the street. This means orienting individual entries and porches to the street, with front entry not more than 25 feet from the street. In cluster cottage developments with internal circulation and grounds, this means that at least 50% of the units have main entries facing a street or common private drive, rather than be oriented toward a parking lot or the interior. *(1 design point per dwelling)*

(4) Incorporate architectural elements of one of the city's historical styles (Queen Anne, Dutch Colonial Revival, or Bungalow style) into the design to reinforce the city's cultural identity. Typical design elements which should be considered include, but are not limited to, "crippled hip" roofs, Palladian-style window, roof eave brackets, dormer windows, and decorative trim boards. *(1 design point per dwelling)*

(5) Use roof pitches 5:12 to 6:12 *(1 design point per dwelling)*

(6) Use at least two (2) different types of contrasting siding materials on the front street-facing elevation. Siding materials may including, but are not limited to wood, wood composite (wood-appearance siding), board and batten (not more than 24 inches between batts), brick masonry, stone masonry, shake (cedar or concrete-fiber shake applied on upper portions of exterior walls and gable ends), stucco, and similar materials at the discretion of the reveiw body. Each material or pattern used to meet this standard shall comprise at least 20 percent of the subject elevation *(1 design point per dwelling).*

(7) Use architectural features to create interest in the façade such exterior wood or wood-appearance shutters or false shutters, pergolas or trellis work, curved windows or windows with divided or simulated divided lights. *(1 design point per dwelling).*

(8) On boundaries with lots outside the development that have existing dwellings, limit the height of new dwellings to not more than 5 feet higher than the existing dwelling, unless new dwelling or portion of the new dwelling would be separated from the existing dwelling by 15 feet or more *(2 design points per dwelling on the boundary).*

(9) To promote privacy, on upper floors facing and within 10 feet of an interior property line outside the development, any windows must be either placed above the sight line from interior, or must be of a frosted or opaque type *(1 design point per dwelling).*

(10) Use multiple, non-repetitive dwelling designs. Where substantially similar dwelling designs are repeated within a subdivision, they are separated by at least two dwellings of different designs on the same side of any street frontage. Dwellings designs that vary at least three dominant façade features (such as façade materials, roof orientation, reversed orientation, porch or garage features) are not considered substantially similar *(1 design point per dwelling).*

151.703 VEHICULAR ACCESS STANDARDS.

(F) Shared driveways. The number of driveways onto arterial streets shall be minimized by the use of shared driveways with adjoining lots where feasible. The city shall require shared driveways as a condition of land division or site design review, as applicable, for traffic safety and access management purposes in accordance with the following standards:

(1) Where there is an abutting developable property, a shared driveway shall be provided. When shared driveways are required, they shall be stubbed to adjacent developable parcels to indicate future extension. "Stub" means that a driveway temporarily ends at the property line, but may be accessed or extended in the future as the adjacent parcel develops. "Developable" means that a parcel is either vacant or it is likely to receive additional development (i.e., due to infill or redevelopment potential).

(2) Access easements (i.e., for the benefit of affected properties) shall be recorded for all shared driveways, including pathways, at the time of final plat approval or as a condition of site development approval.

(3) No more than ~~two~~ [three, four, five, six] lots may access one shared driveway. A maintenance agreement between the property owners using the shared driveway regarding the driveway and its associated landscaping shall be recorded.

PROPOSED DESIGN STANDARDS

(Note: Proposed standards in June 2009. Balloons on right show changes from December 2007 draft)

Action 4.2J: Create design standards that promote the development of attractive, livable, and functional neighborhoods, taking care not to increase costs of housing or reduce the number of dwellings.

Good design need not necessarily create additional costs. However, care should be taken not to require items that do increase development costs or reduce the amount of housing that can be created. Design standards should provide a wide menu design options to choose from, rather than prescribing that certain elements be used. Some elements which may be feasible in larger developments, such as creating common areas or walking paths, may not be feasible in smaller developments. Thus, the committee recommends a two-tier approach to design standards: one for smaller and one for larger developments.

A menu of choices could include items such as

- In larger developments, incorporating pathways or common areas.
- Narrowing driveways to provide greater front yard greenspace and additional on-street parking.
- De-emphasizing the garage on the front façade to promote human scale and feel in the neighborhood.
- Orienting the building and entrances toward the street and minimizing the front setback to promote human scale neighborhoods, neighbor interaction and eyes on the street.
- Using entry features and accents, such as porches or recessed entries, to make buildings inviting.
- Using historical architectural styles to blend with Newberg.
- Varying dwelling designs to create interest and avoid monotony.
- Creating small, useable yards for outdoor living space.
- Adding interest to building architecture by incorporating features such as pitched roofs, contrasting siding materials, and interesting window designs.
- Limiting heights of buildings near neighboring property boundaries.

The following is a starting point for amendments to the Development Code.

DRAFT DEVELOPMENT CODE DESIGN STANDARDS

• 151.XXX RESIDENTIAL DESIGN STANDARDS

The purpose of this section is to ensure that residential developments provide good design, provide a healthy and attractive environment for those who live there, and are compatible with surrounding development. As part of the review process, an applicant for a residential subdivision, multi-unit residential project, or planned unit development project must demonstrate that some of the following site and building design elements,

Deleted: 253.7

Deleted: DESIGN POINTS

Deleted: taking advantage of the flexible development standards under • 151.253.5

Deleted:

Deleted: that is subject to • 151.253.5,

Deleted: Z:\WP5FILES\FILES.G\G 2009\Gen File 09-007 Affordable Housing Phase 2\Affordable Housing - Planning Commission\Design Standards comparison old vs new.121009.doc

Deleted: K:\Wp\Planning\Misc\Wp5files\FILES.G\G 2009\Gen File 09-007 Affordable Housing Phase 2\Affordable Housing - Planning Commission\Design Standards comparison old vs new.121009.doc

each of which has a point value, have been incorporated into the design of the project. For more information and illustrations of the following design elements, refer to *Newberg Residential Development Design Guidelines (July 1997).*

(A) Multi-unit projects shall use the design standards in § 151.195. Projects with six or fewer units shall achieve at least 16 points using the elements in that section. Projects with seven or more units shall achieve at least 22 points using the elements in that section.

(B) Single family subdivisions shall use the design standards in § 151.XXX below.

(C) Developers of attached single family projects, projects with multiple single family dwelling on one lot, or projects with combinations of single family detached, single family detached, and multi-unit developments may elect to use either the standards in § 151.195 or § 151.XXX.

• 151.XXX SINGLE FAMILY RESIDENTIAL DESIGN STANDARDS

Projects subject to these design standards shall achieve at least the minimum number of design points describe below.

Projects of 20 dwelling units or more must achieve at total number of design points equal to 10 design points multiplied by the number of dwelling units (10 points x # of dwelling units).

Projects of 19 dwelling units or fewer must achieve at total number of design points equal to 7 design points multiplied by the number of dwelling units (7 points x # of dwelling units).

Where the applicant is using design elements that will be achieved when future building permits are issued, the applicant shall submit a design sheet for the subdivision that explains which design elements must be incorporated into the dwellings when they are constructed.

The applicant shall develop appropriate Covenants, Codes and Restrictions which include design requirements that meet the standards of this section of the Code to be recorded at the time of final plat.

(A) Subdivision design elements

(1) The project achieves at over 80 percent of the target density for the zone. *(5 design points for each dwelling above 80% of target density using the following formula: Proposed # of dwellings - Target # of dwellings x 80%) x 5 points = # points, rounded to nearest whole number)*

(2) Use public walkways or multi-use paths not adjacent to streets in side yards or common areas connecting to a park or collector or arterial street *(1 design point per 100 linear feet of walkway or path)*

Deleted:

Deleted: *Multi-unit developments* the number of residential design points accumulated shall be determined using the following formula: *Number of points scored using § 151.195 x number of dwelling units x 0.25.*¶
¶
Residential subdivisions and Planned Unit Developments - the number of residential design points (known as "design points") shall be determined as follows:¶
¶

Deleted: subdivision

Deleted: least

Deleted:

Deleted:

Deleted: Z:\WP5FILES\FILES.G\G 2009\Gen File 09-007 Affordable Housing Phase 2\Affordable Housing - Planning Commission\Design Standards comparison old vs new.121009.doc

Deleted: K:\Wp\Planning\Misc\Wp5files\FILES.G\G 2009\Gen File 09-007 Affordable Housing Phase 2\Affordable Housing - Planning Commission\Design Standards comparison old vs new.121009.doc

(3) Provide additional on-street parking *(1 design point per on-street parking space provided beyond 1 per unit)*

(4) Use antique street lighting styles as approved by City *(1 design point per lighting fixture used)* (NOTE: City will research cost effective designs available).

(5) Use site furnishings to enhance open space. Communal amenities such as benches, gazebos, playground equipment, fountains, and/or common patios enhance the outdoor environment and comprise not less than one-half percent of the estimated construction cost of all building(s). Estimated costs are subject to city review and approval. *(1 design point per $1,000 in furnishings)*

(6) Provide usable common recreational area, including but not limited to play fields, walking trails, exercise circuit, playgrounds, common patios, gardens, and/or similar functional and age-appropriate common facilities, a central green or pocket park(s) in a subdivision. *(1 design point per 500 square feet of area)*

(7) Provide a natural feature and tree preservation/replacement plan. Plan shall specify replacement tree caliper and maintenance of natural features. (design points - to be determined).

(B) Site design elements

(1) Bring dwelling close to street by keeping dwelling at most 25 feet from the front property line. *(1 design point per dwelling)*

(2) Use a single narrow (10 to 14 feet width) driveway per unit, or single shared driveway (20 feet to 24 feet width) for two units *(1 design points per dwelling)*

(3) Provide increased setbacks between buildings. Increase side yard setbacks (perpendicular to street) so that there is minimum 15-foot separation between buildings on at least one side. *(1 design points per separation)*

(4) Provide a useable interior yard or courtyard of at least 1000 square feet. *(1 design point per dwelling)*

(5) Use a uniform front yard fence design for the development. *(1 design point per lot with fence design)*

(C) Building design elements

(1) Use entry features and accents such as distinctive building or paving materials and detailing (e.g., unenclosed and covered porch (minimum depth of 6 feet and minimum width of 8 feet), roof overhang or, recessed entry with distinctive arch or gable, pergola, arbor, pathway pavers, or similar feature) to mark major entries to multi-unit buildings or individual units. *(1 design point per dwelling)*

(2) De-emphasize the garage on the front façade

(a) If on front façade, limit garage to single car entrance (16 feet entrance width or less) *(2 design points per dwelling)*

Deleted:

Deleted: Use extra width (6 feet or wider) planter strips between sidewalks and streets *(1 design point for each 100 square feet of additional planter strip area)*¶
(4) Use alleys for access *(3 design points per lot with alley access)*¶
(5)

Deleted: (6

Deleted: (7

Deleted: (8

Deleted: (9) Preserve existing natural features, including topography, water features, and/or native vegetation. *(1 design point per 1,000 square feet of natural area, up to 20% of required design point total)*¶
(10) Preserve and protect existing healthy, attractive trees with a trunk diameter of 8 inches or larger. *(1 design point per tree 8 to 16 inches diameter, 2 design points per tree above 16 inches diameter)*¶
(11) Provide maintenance contracts for common areas and planter strips. *(1 design point per lot fronting a planter strip or common area with maintenance contract)*¶

Deleted:

Deleted:

Deleted:

Deleted:

Deleted: (minimum width and depth of 20 feet at all points)

Deleted:

Deleted: Reduce percent total lot and building coverage. *(1 design point per each 2 percent lot coverage reduction)*¶
(6)

Deleted:

Deleted:

Deleted:

Deleted: Z:\WP5FILES\FILES.G\G 2009\Gen File 09-007 Affordable Housing Phase 2\Affordable Housing - Planning Commission\Design Standards comparison old vs new.121009.doc

Deleted: K:\Wp\Planning\Misc\Wp5files\FILES.G\G 2009\Gen File 09-007 Affordable Housing Phase 2\Affordable Housing - Planning Commission\Design Standards comparison old vs new.121009.doc

(b) If on front façade, limit garage to two car entrance (28 feet entrance width or less) *(1 design points per dwelling)*

(c) Garage even with or setback up to 10 feet from front façade of dwelling. *(1 design point per dwelling)*

(d) Garage setback 10-19 feet from front façade of dwelling *(2 design point per dwelling)*

(e) Garage setback 20 or more feet from front façade. *(3 design point per dwelling)*

(f) Garage entrance not facing street. If side of garage faces the street, then windows, doors, shutters, or similar architectural features are placed that comprise at least 20 percent of the side wall, or landscaping that will upon maturity obscure at least 30 percent of the side wall *(2 design point per dwelling)*

(3) Orient buildings toward the street. This means orienting individual entries and porches to the street, with front entry not more than 25 feet from the street. In cluster cottage developments with internal circulation and grounds, this means that at least 50% of the units have main entries facing a street or common private drive, rather than be oriented toward a parking lot or the interior. *(1 design point per dwelling)*

(4) Incorporate architectural elements of one of the city's historical styles (Queen Anne, Dutch Colonial Revival, or Bungalow style) into the design to reinforce the city's cultural identity. Typical design elements which should be considered include, but are not limited to, "crippled hip" roofs, Palladian-style window, roof eave brackets, dormer windows, and decorative trim boards. *(1 design point per dwelling)*

(5) Use roof pitches 5:12 to 6:12 *(1 design point per dwelling)*

(6) Use at least two (2) different types of contrasting siding materials on the front street-facing elevation. Siding materials may including, but are not limited to wood, wood composite (wood-appearance siding), board and batten (not more than 24 inches between batts), brick masonry, stone masonry, shake (cedar or concrete-fiber shake applied on upper portions of exterior walls and gable ends), stucco, and similar materials at the discretion of the Director. Each material or pattern used to meet this standard shall comprise at least 20 percent of the subject elevation *(1 design point per dwelling).*

(7) Use architectural features to create interest in the façade such exterior wood or wood-appearance shutters or false shutters, pergolas or trellis work, curved windows or windows with divided or simulated divided lights. *(1 design point per dwelling).*

(8) On boundaries with lots outside the development that have existing dwellings, limit the height of new dwellings to not more than 5 feet higher than the existing dwelling, unless new dwelling or portion of the new dwelling would

Deleted:

Deleted:

Deleted:

Deleted:

Deleted: Use appropriate outdoor lighting which enhances the nighttime safety and security of pedestrians without causing glare in nearby buildings. *(1 design point per 5 dwellings)*¶ (5)

Deleted: (6

Deleted: 6;

Deleted: or greater

Deleted: 7

Deleted: each

Deleted: 16

Deleted: (8

Deleted: as bay windows,

Deleted: like sash windows with divided lights, curved windows, exposed wooden window

Deleted: , wood

Deleted: wood-like sash windows, and wood or wood-like trim, balconies, cupolas, rounded arches, and

Deleted: /

Deleted: integrated into building facades

Deleted: 9

Deleted: Z:\WP5FILES\FILES.G\G 2009\Gen File 09-007 Affordable Housing Phase 2\Affordable Housing - Planning Commission\Design Standards comparison old vs new.121009.doc

Deleted: K:\Wp\Planning\Misc\Wp5files\FILES.G\G 2009\Gen File 09-007 Affordable Housing Phase 2\Affordable Housing - Planning Commission\Design Standards comparison old vs new.121009.doc

be separated from the existing dwelling by 15 feet or more *(2 design points per dwelling on the boundary).*

(9) To promote privacy, on upper floors facing and within 10 feet of an interior property line outside the development, any windows must be either placed above the sight line from interior, or must be of a frosted or opaque type *(1 design point per dwelling).*

(10) Use multiple, non-repetitive dwelling designs. Where substantially similar dwelling designs are repeated within a subdivision, they are separated by at least two dwellings of different designs on the same side of any street frontage. Dwellings designs that vary at least three dominant façade features (such as façade materials, roof orientation, reversed orientation, porch or garage features) are not considered substantially similar *(1 design point per dwelling).*

Deleted: 30

Deleted: (10

Deleted: 11

Deleted:

Deleted: Z:\WP5FILES\FILES.G\G 2009\Gen File 09-007 Affordable Housing Phase 2\Affordable Housing - Planning Commission\Design Standards comparison old vs new.121009.doc

Deleted: K:\Wp\Planning\Misc\Wp5files\FILES.G\G 2009\Gen File 09-007 Affordable Housing Phase 2\Affordable Housing - Planning Commission\Design Standards comparison old vs new.121009.doc

Attachment 2

APPENDIX D

FIRE APPARATUS ACCESS ROADS

The provisions contained in this appendix are adopted by the State of Oregon.

SECTION D101
GENERAL

D101.1 Scope. Fire apparatus access roads shall be in accordance with this appendix and all other applicable requirements of the *International Fire Code*. The fire code official may be guided by the Oregon Department of Land Conservation and Development's Neighborhood Street Design Guidelines, June 2001.

SECTION D102
REQUIRED ACCESS

D102.1 Access and loading. Facilities, buildings or portions of buildings hereafter constructed shall be accessible to fire department apparatus by way of an approved fire apparatus access road with an asphalt, concrete or other approved driving surface capable of supporting the imposed load of fire apparatus weighing at least 60,000 pounds (27 240 kg).

Exception: The minimum weight specified in Section D102.1 may be increased by the fire code official based upon the actual weight of fire apparatus vehicles serving the jurisdiction which provides structural fire protection services to the location, including fire apparatus vehicles that respond under automatic and mutual aid agreements.

D102.1.1 Access in urban-wildland interface areas. For egress and access concerns in urban-wildland interface locations, the fire code official may be guided by the *International Wildland-Urban Interface Code*.

SECTION D103
MINIMUM SPECIFICATIONS

D103.1 Access road width with a hydrant. Where a fire hydrant is located on a fire apparatus access road, the minimum road width shall be 26 feet (7925 mm). See Figure D103.1.

Exceptions: The fire code official is authorized to modify the provisions of Section D103.1 when:

1. In accordance with OAR 918-480-0100, all buildings are completely protected with an approved automatic fire sprinkler system; or
2. Provisions are made for the emergency use of side-walks by such means as rolled or mountable curbs capable of supporting the fire department's apparatus; or
3. Streets or roadways are identified for one-way circulating flow of traffic or pullouts are provided every 150 feet (45 720 mm) on streets or roadways identified for two-way traffic; or

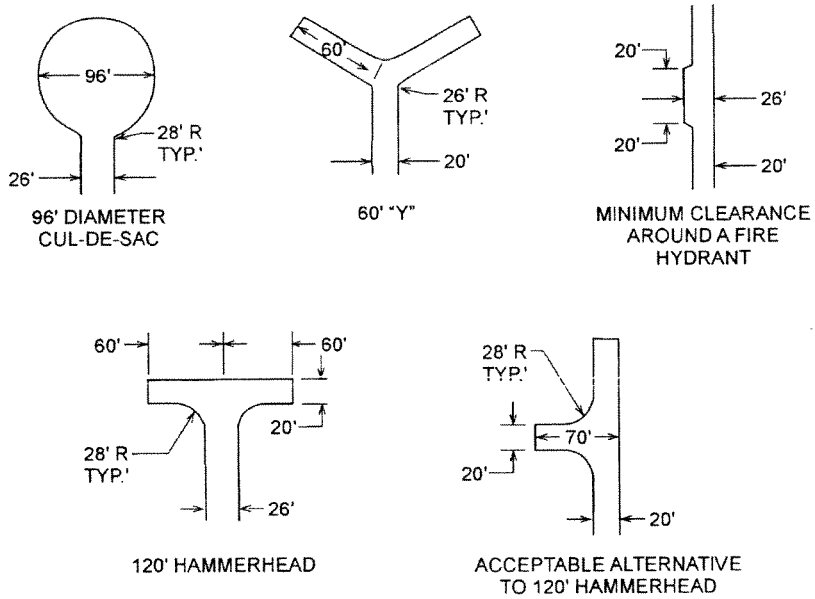

For SI: 1 foot = 304.8 mm.

FIGURE D103.1
DEAD-END FIRE APPARATUS ACCESS ROAD TURNAROUND

4. A grid system for traffic flow is provided and streets or roadways in the grid do not exceed 300 feet (91 400 mm) in length, but are accessible at each end from approved access roadways or streets.

D103.2 Grade. Fire apparatus access roads shall not exceed 10 percent in grade.

Exception: Grades steeper than 10 percent as approved by the fire chief.

D103.3 Turning radius. The minimum turning radius shall be determined by the fire code official.

D103.3.1 Angles of approach. The angles of approach and departure for any fire apparatus access roads shall not be less than the design limitations of the fire apparatus of the fire department, subject to the approval of the fire code official.

D103.3.2 Drainage. When subject to run-off damage, the fire code official is authorized to require approved drainage.

D103.4 Dead ends. Dead-end fire apparatus access roads in excess of 150 feet (45 720 mm) shall be provided with width and turnaround provisions in accordance with Table D103.4.

TABLE D103.4
REQUIREMENTS FOR DEAD-END FIRE APPARATUS ACCESS ROADS

LENGTH (feet)	WIDTH (feet)	TURNAROUNDS REQUIRED
0–150	20	None required
151–500	20	120-foot Hammerhead, 60-foot "Y" or 96-foot-diameter cul-de-sac in accordance with Figure D103.1
501–750	26	120-foot Hammerhead, 60-foot "Y" or 96-foot-diameter cul-de-sac in accordance with Figure D103.1
Over 750	Special approval required	

For SI: 1 foot = 304.8 mm.

D103.5 Fire apparatus access road gates. Gates securing the fire apparatus access roads shall comply with all of the following criteria:

1. The minimum gate width shall be 20 feet (6096 mm).
2. Gates shall be of the swinging or sliding type.
3. Construction of gates shall be of materials that allow manual operation by one person.
4. Gate components shall be maintained in an operative condition at all times and replaced or repaired when defective.
5. Electric gates shall be equipped with a means of opening the gate by fire department personnel for emergency access. Emergency opening devices shall be approved by the fire code official.
6. Manual opening gates shall not be locked with a padlock or chain and padlock unless they are capable of being opened by means of forcible entry tools or when a key box containing the key(s) to the lock is installed at the gate location.
7. Locking device specifications shall be submitted for approval by the fire code official.

D103.6 Signs. Where required by the fire code official, fire apparatus access roads shall be marked with permanent NO PARKING—FIRE LANE signs complying with Figure D103.6. Signs shall have a minimum dimension of 12 inches (305 mm) wide by 18 inches (457 mm) high and have red letters on a white reflective background. Signs shall be posted on one or both sides of the fire apparatus road as required by Section D103.6.1 or D103.6.2.

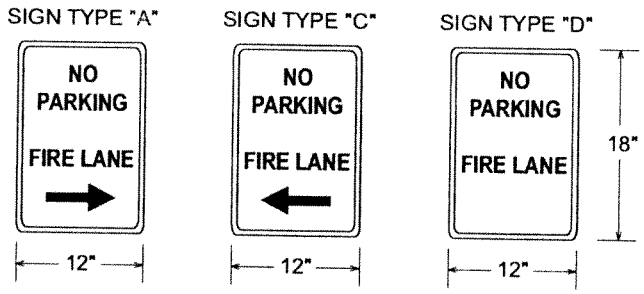

FIGURE D103.6
FIRE LANE SIGNS

D103.6.1 Roads 20 to 26 feet in width. Fire apparatus access roads 20 to 26 feet wide (6096 to 7925 mm) shall be posted on both sides as a fire lane.

D103.6.2 Roads more than 26 feet in width. Fire apparatus access roads more than 26 feet wide (7925 mm) to 32 feet wide (9754 mm) shall be posted on one side of the road as a fire lane.

SECTION D104
COMMERCIAL AND INDUSTRIAL DEVELOPMENTS

D104.1 Buildings exceeding three stories or 30 feet in height. Buildings or facilities exceeding 30 feet (9144 mm) or three stories in height shall have at least three means of fire apparatus access for each structure.

D104.2 Buildings exceeding 62,000 square feet in area. Buildings or facilities having a gross building area of more than 62,000 square feet (5760 m^2) shall be provided with two separate and approved fire apparatus access roads.

Exception: Projects having a gross building area of up to 124,000 square feet (11 520 m^2) that have a single approved fire apparatus access road when all buildings are equipped throughout with approved automatic sprinkler systems.

D104.3 Remoteness. Where two access roads are required, they shall be placed a distance apart equal to not less than one half of the length of the maximum overall diagonal dimension of the property or area to be served, measured in a straight line between accesses.

SECTION D105
AERIAL FIRE APPARATUS ACCESS ROADS

D105.1 Where required. Buildings or portions of buildings or facilities exceeding 30 feet (9144 mm) in height above the lowest level of fire department vehicle access shall be provided with approved fire apparatus access roads capable of accommodating fire department aerial apparatus. Overhead utility and power lines shall not be located within the aerial fire apparatus access roadway.

D105.2 Width. Fire apparatus access roads shall have a minimum unobstructed width of 26 feet (7925 mm) in the immediate vicinity of any building or portion of building more than 30 feet (9144 mm) in height.

D105.3 Proximity to building. At least one of the required access routes meeting this condition shall be located within a minimum of 15 feet (4572 mm) and a maximum of 30 feet (9144 mm) from the building, and shall be positioned parallel to one entire side of the building.

SECTION D106
MULTIPLE-FAMILY RESIDENTIAL DEVELOPMENTS

D106.1 Projects having more than 100 dwelling units. Multiple-family residential projects having more than 100 dwelling units shall be equipped throughout with two separate and approved fire apparatus access roads.

> **Exception:** Projects having up to 200 dwelling units may have a single approved fire apparatus access road when all buildings, including nonresidential occupancies, are equipped throughout with approved automatic sprinkler systems installed in accordance with Section 903.3.1.1 or 903.3.1.2.

D106.2 Projects having more than 200 dwelling units. Multiple-family residential projects having more than 200 dwelling units shall be provided with two separate and approved fire apparatus access roads regardless of whether they are equipped with an approved automatic sprinkler system.

SECTION D107
ONE- OR TWO-FAMILY RESIDENTIAL DEVELOPMENTS

D107.1 One- or two-family dwelling residential developments. Developments of one- or two-family dwellings where the number of dwelling units exceeds 30 shall be provided with separate and approved fire apparatus access roads and shall meet the requirements of Section D104.3.

Exceptions:

1. Where there are more than 30 dwelling units on a single public or private fire apparatus access road and all dwelling units are equipped throughout with an approved automatic sprinkler system in accordance with Section 903.3.1.1, 903.3.1.2 or 903.3.1.3, access from two directions shall not be required.
2. The number of dwelling units on a single fire apparatus access road shall not be increased unless fire apparatus access roads will connect with future development, as determined by the fire code official.

City of Newberg
414 E First Street
P.O. Box 970
Newberg, OR 97132

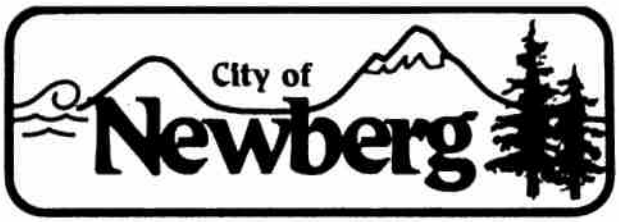

City Manager
(503) 538-9421
(503) 538-5013 Fax

Planning and Building Department

P.O. Box 970 • 414 E First Street • Newberg, Oregon 97132 • (503) 537-1240 • Fax (503) 537-1272

CITY OF NEWBERG
DEVELOPMENT CODE AMENDMENT
STAFF REPORT

FILE NO: GEN FILE 09-007

REQUEST: Adopt Resolution 2009-274, which summarizes the Planning Commission's actions in 2009 recommending Comprehensive Plan Text and Newberg Development Code changes to support affordable housing.

APPLICANT: City of Newberg

PREPARED BY: City of Newberg Planning Staff

DATE OF HEARING: December 10, 2009

ATTACHMENTS:
Planning Commission Resolution No. 2009-274:
Exhibit A: Proposed Comprehensive Plan Text and Development Code Amendments
1. *Newberg Affordable Housing Action Plan* (by reference)

SUMMARY

On May 4, 2009, the Newberg City Council passed Resolution No. 2009-2843, accepting the Newberg Affordable Housing Action Plan. One of the recommended actions within the Plan is for the City to consider the adoption of amendments to the Newberg Comprehensive Plan Text and Newberg Development Code that are designed to support affordable housing.

In 2009, the Planning Commission held a series public hearings regarding recommended Comprehensive Plan Text and Development Code changes from the Newberg Affordable Housing Action Plan intended to support affordable housing. As a result of those public hearings, the Planning Commission passed the following resolutions recommending that the City Council adopt the following changes:

Resolution No. 2009-265 (passed June 11, 2009)

Recommended changes: Amend the Newberg Comprehensive Plan Text goals and policies

Resolution No. 2009-266 (passed July 9, 2009)

Recommended changes: Amend the Newberg Development Code regarding residential lot dimensions, sizes, setbacks and building heights.

Resolution No. 2009-267 (passed September 10, 2009)

Recommended changes: Amend the Newberg Development Code regarding an optional "Flexible Development Track" that would allow developers flexibility in some development standards, provided they commit to providing some affordable housing. Under this proposal, a developer who voluntarily chooses to use this track would be given flexibility in development standards intended to make it easier and less expensive to create housing. In exchange for this flexibility, the developer would have to provide at least a certain amount of affordable housing. The obligation to provide affordable housing can be achieved with market-rate housing, provision of affordable housing units remain affordable in the long-term, and/or in-lieu credits though cash contributions to a City of Newberg Housing Trust Fund.

Resolution No. 2009-272 (passed November 12, 2009)

Recommended changes: Amend the Newberg Development Code as follows:

- Permit duplexes in the Low Density Residential (R-1) zone as an allowed use;
- Allow greater flexibility to the use of accessory dwelling units (ADUs);
- Allow unlimited residential dwelling units above the ground floor in the Neighborhood Commercial (C-1) zone, provided private parking (one space per unit) is provided;
- Provide incentives for the development of more affordable dwelling units in Planned Unit Developments (PUDs);
- Allow any legal non-conforming duplex or multi-family dwelling unit to be reconstructed if destroyed; and,
- Reduce and provide flexibility to parking requirements for affordable housing projects.

Resolution No. 2009-273 (passed December 10, 2009)

Recommended changes: Amend the Newberg Development Code as follows:

- Add a definition regarding "special needs housing";
- Clarify that the planning process for the recommendation that accessory dwelling units be an allowed use in the R-1 and R-P zones instead of the current conditional use would be an administrative Type 1.
- Allow reduction of parking requirements where an affordable housing development is near a transit stop or where the development provides its own transit;
- Modify current driveway standard to allow more than two lots per driveway; and,
- Add design standards for housing that promote the development of attractive, livable, and functional neighborhoods.

The preliminary staff recommendation is made in the absence of public hearing testimony, and may be modified subsequent to the close of the public hearing. At this writing, staff recommends the following motion:

Move to adopt **Planning Commission Resolution 2009-273** which recommends that the City Council adopt the proposed amendments to the Newberg Development Code, as detailed in Exhibit A in the resolution.

PLANNING COMMISSION RESOLUTION NO. 2009-273

A RESOLUTION OF THE PLANNING COMMISSION OF THE CITY OF NEWBERG RECOMMENDING THAT THE CITY COUNCIL AMEND THE NEWBERG COMPREHENSIVE PLAN TEXT AND NEWBERG DEVELOPMENT TO SUPPORT AFFORDABLE HOUSING

RECITALS:

1. On May 8, 2008, the Newberg City Council passed Resolution No. 2008-2781, establishing the Housing for Working Families Ad Hoc Committee. The charge of the Committee was to "... identify and recommend tools appropriate for the Newberg community that are intended to encourage the development of housing for working families."

2. On May 4, 2009, the Housing for Working Families Ad Hoc Committee presented the *Newberg Affordable Housing Action Plan* to the City Council. At that meeting, City Council passed Resolution No. 2009-2843, stating their acceptance of the Plan.

3. The *Newberg Affordable Housing Action Plan* recommends that the City should consider the adoption of various amendments to the Newberg Comprehensive Plan Text and Newberg Development Code.

4. In 2009, the Planning Commission held a series public hearings regarding recommended development code changes intended to support affordable housing from the Newberg Affordable Housing Action Plan. As a result of those public hearings, the Planning Commission the following resolutions:

   Resolution No. 2009-265 (passed June 11, 2009)

   Recommended changes: Amend the Newberg Comprehensive Plan Text goals and policies

   Resolution No. 2009-266 (passed July 9, 2009)

   Recommended changes: Amend the Newberg Development Code regarding residential lot dimensions, sizes, setbacks and building heights.

   Resolution No. 2009-267 (passed September 10, 2009)

   Recommended changes: Amend the Newberg Development Code regarding an optional "Flexible Development Track" that would allow developers flexibility in some development standards, provided they commit to providing some affordable housing. Under this proposal, a developer who voluntarily chooses to use this track would be given flexibility in development standards intended to make it easier and less expensive to create housing. In exchange for this flexibility, the developer would have to provide at least a certain amount of affordable housing. The obligation to provide affordable housing can be achieved with market-rate housing, provision of affordable housing units remain affordable in the long-term, and/or in-lieu credits though cash contributions to a City of Newberg Housing Trust Fund.

Resolution No. 2009-272 (passed November 12, 2009)

Recommended changes: Amend the Newberg Development Code as follows:

- Permit duplexes in the Low Density Residential (R-1) zone as an allowed use;
- Allow greater flexibility to the use of accessory dwelling units (ADUs);
- Allow unlimited residential dwelling units above the ground floor in the Neighborhood Commercial (C-1) zone, provided private parking (one space per unit) is provided;
- Provide incentives for the development of more affordable dwelling units in Planned Unit Developments (PUDs);
- Allow any legal non-conforming duplex or multi-family dwelling unit to be reconstructed if destroyed; and,
- Reduce and provide flexibility to parking requirements for affordable housing projects.

Resolution No. 2009-273 (passed December 10, 2009)

Recommended changes: Amend the Newberg Development Code as follows:

- Add a definition regarding "special needs housing";
- Clarify that the planning process for the recommendation that accessory dwelling units be an allowed use in the R-1 and R-P zones instead of the current conditional use would be an administrative Type 1.
- Allow reduction of parking requirements where an affordable housing development is near a transit stop or where the development provides its own transit;
- Modify current driveway standard to allow more than two lots per driveway; and,
- Add design standards for housing that promote the development of attractive, livable, and functional neighborhoods.

NOW THEREFORE, BE IT RESOLVED by the Planning Commission of the City of Newberg that it recommends that the City Council approve the amendments to the Newberg Comprehensive Plan Text and the Newberg Development Code as shown in Exhibit A.

This recommendation is based on the staff report and testimony.

DATED this 10th day of December, 2009

AYES: NAYS: ABTAIN: ABSENT:

ATTEST:

Planning Commission Secretary

Planning Commission Chair

Exhibit A: Proposed Newberg Comprehensive Plan Text and Newberg Development Code Amendments

PLANNING COMMISSION RESOLUTION NO. 2009-265

A RESOLUTION OF THE PLANNING COMMISSION OF THE CITY OF NEWBERG RECOMMENDING THAT THE CITY COUNCIL AMEND THE NEWBERG COMPREHENSIVE PLAN GOALS AND POLICIES TO SUPPORT AFFORDABLE HOUSING

RECITALS:

1. On May 8, 2008, the Newberg City Council passed Resolution No. 2008-2781, establishing the Housing for Working Families Ad Hoc Committee. The charge of the Committee was to "... identify and recommend tools appropriate for the Newberg community that are intended to encourage the development of housing for working families."

2. On May 4, 2009, the Housing for Working Families Ad Hoc Committee presented the *Newberg Affordable Housing Action Plan* to the City Council. At that meeting, City Council passed Resolution No. 2009-2843, stating their acceptance of the Plan.

3. One of the recommended actions within the *Newberg Affordable Housing Action Plan* is that the City consider the adoption of goal and policy amendments to the Newberg Comprehensive Plan that are designed to support affordable housing.

4. On May 27, 2009, notice of a public hearing on the proposed amendments was published in the Newberg Graphic. The same notice was posted in four public places on May 21, 2009.

5. On June 11, 2009, the Newberg Planning Commission held a public hearing on the proposed amendments.

NOW THEREFORE, BE IT RESOLVED by the Planning Commission of the City of Newberg that it recommends that the City Council approve the amendments to the Newberg Comprehensive Plan as shown in Exhibit A, contingent upon the Planning Commission's review of the recommended Newberg Development Code amendments described in the Newberg Affordable Housing Action Plan.

This recommendation is based on the staff report and testimony.

Dated this 11th day of June, 2009.

AYES: 5 NAYES: Ø ABSTAIN: Ø ABSENT: 2 TRI SIGHR

ATTEST:

Dawn Karen Beirell
Planning Commission Secretary

Planning Commission Chair

Exhibit A: Proposed Newberg Comprehensive Plan Goal and Policy Amendments

Exhibit A to Resolution 2009-265
Proposed Newberg Comprehensive Plan Goal and Policy Amendments

Editorial Key:

Normal = existing text
~~Strikethrough~~ = proposed text deletion
Underline = proposed text additions
Italicized = comment

I. Housing

GOAL: To provide for a diversity in the type, density and location of housing within the City to ensure there is an adequate supply of affordable housing units to meet the needs of City residents of various income levels. (Ordinance 2006-2534)

1. Density Policies

a. *(no change)*

b. Target densities shall be as follows

Classification	Units Per Gross Acre*
Urban Low Density	4.4
Urban Medium Density	9
Urban High Density	16.5

*Includes a 25 percent allowance for streets, walkways and other right-of-ways, utilities, small open spaces, preservation of resources, and similar features.

c. In determining net residential densities, developers may be given density credit for land donated and accepted by the City for needed public facilities.

d. The City encourages the creation of affordable housing through density bonuses. Developers may be given density bonuses for projects meeting minimum City standards for housing affordability and design, as defined under subsection 3, Housing Mix and Affordability.

2. Location Policies *(no change)*

3. Housing Mix and Affordability Policies

AFFORDABLE HOUSING means a dwelling unit that provides housing for a family or individual(s) with a household income less than the median household income for the Newberg area, such that a household pays no more than 30 percent of its annual income on housing (rent/mortgage, utilities, property taxes). Affordable housing may include a care home for low-income individuals. Affordability can be assured through deed-restriction or other recorded documents that specify qualifying income of

buyers or renters, and limiting sales price, rent levels and appreciation. Affordable housing may also include small, market-rate dwelling units (e.g., studios, apartments and accessory dwelling units).

a. – h. *(no change)*

i. The City shall encourage the provision of affordable ~~subsidized~~ housing for low- and very low-income households, which are defined as those earning between 50 percent and 80 percent, and those earning 50 percent or less, of the median household income in Newberg. ~~low-income people~~

j. – n. *(no change)*

o. ~~The City shall encourage incentive-based affordable* housing for low and very low income households in the R-2 and R-3 zones.* (Ordinance 2006-2634, January 3, 2006)~~ The City has adopted a comprehensive approach to meeting local housing needs that balances density, design, and flexibility in code standards and procedures. The City shall use development incentives such as density bonuses, flexible development standards, and streamlined review procedures to stimulate or require the production and preservation of affordable housing. *(replaces old policy "o")*

p. The City shall create a local housing trust fund for the purpose of encouraging the production and retention of affordable housing in Newberg.

~~* Affordable housing is generally considered to cost no more than 30% of gross household income. Low and very low income households are generally defined as those earning 80% and 60%, respectively, of the median gross household income of an area.~~

q. The City shall provide financial incentives for affordable housing, such as system development charge deferrals or waivers, permit application fee reductions or waivers, and land cost write-downs or donations for qualified affordable housing developments. These incentives could be paid by a housing trust fund.

r. The City shall support the retention of affordable housing through public education, planning, zoning and community development programs.

s. The City shall support state legislative efforts that strengthen tenant rights, for example, by ensuring relocation costs and replacement housing are addressed when manufactured home parks close and when low-income housing is converted to other uses.

t. The City shall support state legislative efforts to expand the range of regulatory tools (e.g., inclusionary housing) and non-regulatory tools available to cities in meeting local housing needs.

u. The City shall build understanding and support for affordable housing through educational forums with residents and employers, pre-application consultations with developers, and through local housing studies.

v. The City shall work with local affordable housing providers in developing an overall strategy for meeting Newberg's housing needs.

w. City resources shall be directed toward assisting public and private entities in producing and preserving affordable housing throughout the community.

x. Where large residentially designated parcels are to be annexed, the City shall apply a mixture of zoning, to include some R-3 zoned lands, consistent with the policy of distributing affordable housing throughout the community. Such zoning shall be applied to portions of the property that are most suitable for high density development.

y. The City shall promote and support employer programs that assist employees to secure affordable housing.

z. To the extent possible, the City shall zone residential housing near employment centers.

aa. The City shall promote and support public and/or private transit systems that connect housing to employment centers.

PLANNING COMMISSION RESOLUTION NO. 2009-266

A RESOLUTION OF THE PLANNING COMMISSION OF THE CITY OF NEWBERG RECOMMENDING THAT THE CITY COUNCIL AMEND THE NEWBERG DEVELOPMENT CODE STANDARDS REGARDING RESIDENTIAL LOT DIMENSIONS, SIZES, SETBACKS AND BUILDING HEIGHTS TO SUPPORT AFFORDABLE HOUSING

RECITALS:

1. On May 8, 2008, the Newberg City Council passed Resolution No. 2008-2781, establishing the Housing for Working Families Ad Hoc Committee. The charge of the Committee was to "... identify and recommend tools appropriate for the Newberg community that are intended to encourage the development of housing for working families."

2. On May 4, 2009, the Housing for Working Families Ad Hoc Committee presented the *Newberg Affordable Housing Action Plan* to the City Council. At that meeting, City Council passed Resolution No. 2009-2843, stating their acceptance of the Plan.

3. One of the recommended actions within the *Newberg Affordable Housing Action Plan* is that the City consider the adoption of amendments to the Newberg Development Code that are designed to support affordable housing, including standards regarding residential lot dimensions, sizes, setbacks and building heights.

4. On June 24, 2009, notice of a public hearing on the proposed amendments was published in the Newberg Graphic. The same notice was posted in four public places on June 18, 2009 and mailed to interested parties on June 18, 2009.

5. On July 9, 2009, the Newberg Planning Commission held a public hearing on the proposed amendments.

NOW THEREFORE, BE IT RESOLVED by the Planning Commission of the City of Newberg that it recommends that the City Council approve the amendments to the Newberg Development Code as shown in Exhibit A, contingent upon the Planning Commission's review of additional proposed development code amendments described in the Newberg Affordable Housing Action Plan.

This recommendation is based on the staff report and testimony.

DATED this 9th day of July, 2009

AYES: 7 NAYS: 0 ABTAIN: 0 ABSENT: 0

ATTEST:

Dawn Karen Bevill
Planning Commission Secretary

Planning Commission Chair

Exhibit A: Proposed Newberg Development Code Amendments

Exhibit A to Resolution 2009-266
Proposed Newberg Development Code Amendments

Editorial Key:

Normal = existing text
~~Strikethrough~~ = proposed text deletion
Underline = proposed text additions

LOT REQUIREMENTS

151.565 LOT AREA; LOT AREAS PER DWELLING UNIT.

(A) In the following districts, each lot or development site shall have an area as shown below except as otherwise permitted by this code.

(1) In the R-1 District, each lot or development site shall have a minimum area of ~~7,500~~ 5,000 square feet or as may be established by a sub-district. The average size of lots in a subdivision intended for single family development shall not exceed 10,000 square feet.

(2) In the ~~AI, AR,~~ R-2, R-3, and RP~~, C-1, C-2, and C-3~~ Districts, each lot or development site shall have a minimum area of ~~5,000~~ 3,000 square feet or as may be established by a sub-district. In the R-2 and R-P Districts, the average size of lots in a subdivision intended for single family development shall not exceed 5,000 square feet.

(3) In the AI, AR, C-1, C-2, and C-3 Districts, each lot or development site shall have a minimum area of 5,000 square feet or as may be established by a sub-district.

~~(3)~~ (4) In the M-1, M-2 and M-3 Districts, each lot or development site shall have a minimum area of 20,000 square feet.

~~(4)~~ (5) Institutional Districts shall have a minimum size of five contiguous acres in order to create a large enough campus to support institutional uses; however, additions to the district may be made in increments of any size.

~~(5)~~ (6) Within the commercial zoning district(s) of the Riverfront Overlay Sub-district, there is no minimum lot size required, provided the other standards of this code can be met.

(B) Lot or development site area per dwelling unit.

(1) In the R-1 District, there shall be a minimum of 5,000 square feet per dwelling unit.

(2) In the R-2, AR, and R-P Districts, there shall be a minimum of ~~3,750~~ 3,000 square feet of lot or development site area per dwelling unit. In the R-2 and R-P Districts, lots or development sites in excess of 15,000 square feet used for multiple single family, duplex or multiple family dwellings shall be developed at a minimum of one dwelling per 5,000 square feet lot area.

(3) In the R-3 District, there shall be a minimum of 1,500 square feet of lot or development site area per dwelling unit. Lots or development sites in excess of 15,000 square feet used for multiple single family, duplex or multiple family dwellings shall be developed at a minimum of one dwelling per 2,500 square feet lot area.

(C) In calculating lot area for this section, lot area does not include land within public or private streets. In calculating lot area for maximum lot area/minimum density requirements, lot area does not include land within stream corridors, land reserved for public parks or open spaces, commons buildings, land for preservation of natural, scenic, or historic resources, land on slopes exceeding 15 percent or for avoidance of identified natural hazards, land in shared access easements, public walkways, or entirely

used for utilities, land held in reserve in accordance with a future development plan, or land for uses not appurtenant to the residence.

(D) Lot size averaging is allowed for any subdivision. Some lots may be a under the minimum lot size required in the zone where the subdivision is located, as long as the average size of all lots is at least the minimum lot size.

(Ord. 96-2451, passed 12-2-96; Am. Ord. 99-2507, passed 3-1-99; Am. Ord. 2002-2564, passed 4-15-02; Am. Ord. 2006-2647, passed 6-5-06) Penalty, see § 151.999

151.567 LOT DIMENSIONS AND FRONTAGE.

(A) Width. Widths of lots shall conform to the standards of this code.

(B) Depth to width ratio. Each lot and parcel shall have an average depth between the front and rear lines of not more than two and one-half times the average width between the side lines. Depths of lots shall conform to the standards of this code. Development of lots under 15,000 square feet are exempt from the lot depth to width ratio requirement.

(C) Area. Lot sizes shall conform to standards set forth in this code. Lot area calculations shall not include area contained in public or private streets as defined by this code.

(D) Frontage.

(1) No lot or development site shall have less than the following lot frontage standards:

(a) Each lot or development site shall have either frontage on a public street for a distance of at least 25 feet or have access to a public street through an easement that is at least 25 feet wide. No new private streets, as defined in § 151.003, shall be created to provide frontage or access.

(b) Each lot in an ~~R-1,~~ R-2~~,~~ and R-3~~, AI, or RP~~ Zone shall have a minimum width of ~~50~~ 30 feet at the front building line.

(c) Each lot in an R-1, AI, or RP Zone shall have a minimum width of 50 feet at the front building line.

~~(c)~~ (d) Each lot in an AR Zone shall have a minimum width of 45 feet at the front building line.

(2) The above standards apply with the following exceptions:

(a) Legally created lots of record in existence prior to the effective date of this code.

(b) Lots or development sites which as a process of their creation, were approved with sub-standard widths in accordance with provisions of this code.

(c) Existing private streets may not be used for new dwelling units, except private streets that were created prior to March 1, 1999, including paving to fire access roads standards and installation of necessary utilities, and private streets allowed in the Airport Residential and Airport Industrial Districts.

(Ord. 96-2451, passed 12-2-96; Am. Ord. 99-2507, passed 3-1-99; Am. Ord. 2006-2647, passed 6-5-06) Penalty, see § 151.999

151.568 LOT COVERAGE AND PARKING COVERAGE REQUIREMENTS.

(A) For all buildings and uses the following shall mean the maximum permitted lot coverage, maximum coverage of public or private parking areas or garages, and/or combined maximum lot and parking combined coverage required in the various districts expressed in percentage of the area of the lot or development site in which district such coverage is permitted or required (Fig. IV).

(1) Maximum lot coverage.

(a) R-1: 30%.

(b) R-2 and RP: ~~40%~~ 50%.

(c) AR and R-3: 50%.

(2) Maximum coverage for parking lots; aisles and access; and parking structures, where 50% or more of the perimeter of such structure is open on its sides: R-1, R-2, R-3, and RP: 30%.

(3) Combined maximum lot and parking area coverage:

(a) R-1, R-2 and RP: 60%.

(b) R-3: 70%.

(B) All other districts not listed in division (A) of this section shall not be limited as to lot coverage and parking area coverage.

(Ord. 96-2451, passed 12-2-96; Am. Ord. 2006-2647, passed 6-5-06) Penalty, see § 151.999

151.552 INTERIOR YARD SETBACK.

(A) Residential.

(1) All lots or development sites in the AR, R-1, R-2, ~~and~~ R-3, and R-P Districts shall have interior yards of not less than five feet, except that where a utility easement is recorded adjacent to a side lot line, there shall be a side yard no less than the width of the easement.

~~(2) All lots or development sites in the RP District shall have interior yards of not less than eight feet~~.

151.536 BUILDING HEIGHT LIMITATION.

(A) Residential:

(1) In the R-1, R-2, AR, and RP Districts, no main building shall exceed ~~two and one-half stories, or~~ 30 feet in height~~, whichever is lesser~~. Accessory buildings in the R-1, R 2, R-3, AR, and RP Districts are limited to ~~one story, or~~ 16 feet in height, ~~whichever is lesser,~~ except ~~that~~ as follows:

(a) up to 800 square feet of an accessory building may have a height of up to 24 feet.

(b) aircraft hangars in the AR District may be the same height as the main building.

(2) In the R-3 District, no main building shall exceed ~~three stories or~~ 45 feet in height~~, whichever is lesser,~~ except where an R-3 district abuts upon an R-1 District, the maximum permitted building height shall be limited to ~~two and one-half stories or~~ 30 feet~~, whichever is the lesser,~~ for a distance of 50 feet from the abutting boundary of the aforementioned district.

(3) Single family dwellings permitted in commercial or industrial districts shall not exceed ~~two and one-half stories or~~ 30 feet in height~~, whichever is the lesser~~.

(B) Commercial and industrial:

(1) In the C-1 District no main building or accessory building shall exceed ~~two and one-half stories or~~ 30 feet in height~~, whichever is the lesser~~.

(2) In the AI, C-2, C-3, M-1, M-2, and M-3 Districts there is no building height limitation, except ~~when~~ where said districts abut upon a residential district, the maximum permitted building height shall not exceed the maximum building height permitted in the abutting residential district for a distance of 50 feet from the abutting boundary.

(3) In the C-4 District, building height limitation is described in § 151.527.4(J)(1) of this code.

(C) The maximum height of buildings and uses permitted conditionally shall be stated in the conditional use permits.

(D) Institutional:

(1) The maximum height of any building or structure will be 75 feet except as follows:

(a) Within 50 feet of an interior property line abutting a C-1, R-1, R-2 or R-P District, no main building may exceed 30 feet.

(b) Within 50 feet of an interior property line abutting an R-3 District, no main building may exceed 45 feet.

(c) Within 100 feet of a property line abutting a public street or railroad right-of-way, or within 100 feet of property lines abutting parcels with an R-1, R-2, R-3, R-P, C-1, C-2, C-3, M-1, M-2, or M-3 zoning designation, no main building may exceed 50 feet in height.

(d) To utilize the maximum permitted height standard, at least 80% of the building's ground coverage must be beyond the setback area designated in subdivision (c) above. The maximum encroachment may not exceed 25 feet.

(E) Alternative building height standard: As an alternative to the building height standards above, any project may elect to use the following standard (See Figure XXIV). To meet this standard:

(1) Each point on the building must be no more than 20 feet higher than the ground level at all points on the property lines, plus one vertical foot for each horizontal foot of distance from that property line; and

(2) Each point on the building must be no more than 20 feet higher than the ground level at a point directly north on a property line, plus one vertical foot for each two horizontal feet of distance between those points. This second limit does not apply if the property directly to the north is a right-of-way, parking lot, protected natural resource, or similar unbuildable property.

(F) Buildings within the Airport Overlay Sub-district are subject to the height limits of that sub-district.

151.537 BUILDING HEIGHT EXEMPTIONS.

Roof structures and architectural features. ~~For~~ for the housing of elevators, stairways, tanks, ventilating fans and similar equipment required to operate and maintain the building, fire or parapet walls, skylights, towers, flagpoles, chimneys, smokestacks, wireless masts, T.V. antennas, steeples and similar structures may be erected above the height limits prescribed in this code, provided that no roof structure, feature or any other device above the prescribed height limit shall be allowed or used for the purpose of providing additional floor space. ~~Provided, further, that~~ Further, no roof structure or architectural feature under this exemption shall be erected more than 18 feet above the height of the main building, whether such structure is attached to it or freestanding, nor shall any such structure or feature exceed the height limits of the Airport Overlay Sub-district.

[Note: Figure XXIV below would be added to the Development Code]

XXIV. ALTERNATIVE BUILDING HEIGHT STANDARD

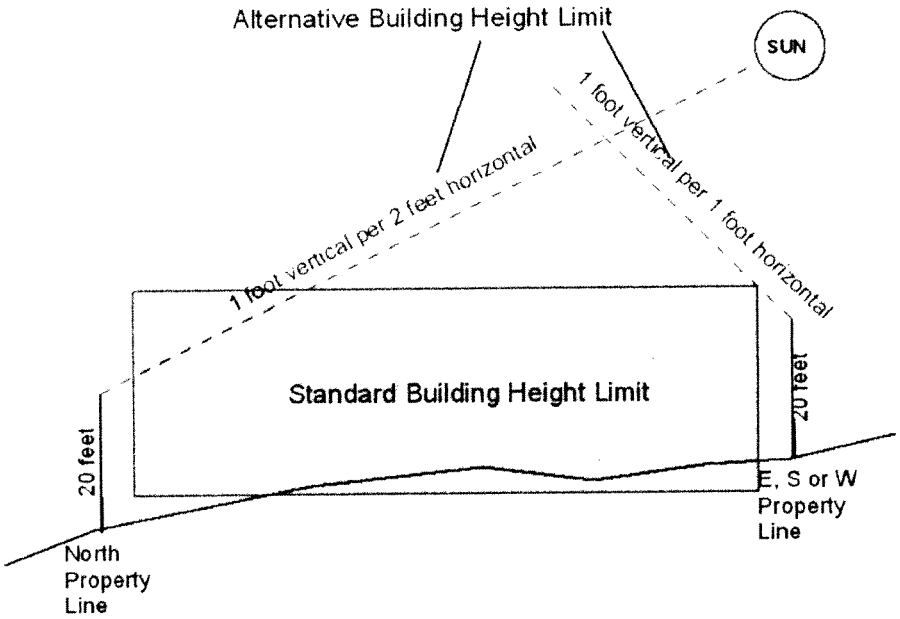

BUILDING HEIGHT. The vertical distance from the grade to the highest point of the coping of a flat roof or the deck line of a mansard roof or to the average height of the highest gable of a pitch or hip roof. See Figure XXIII.

[Note: Figure XXIII below would be added to the Development Code]

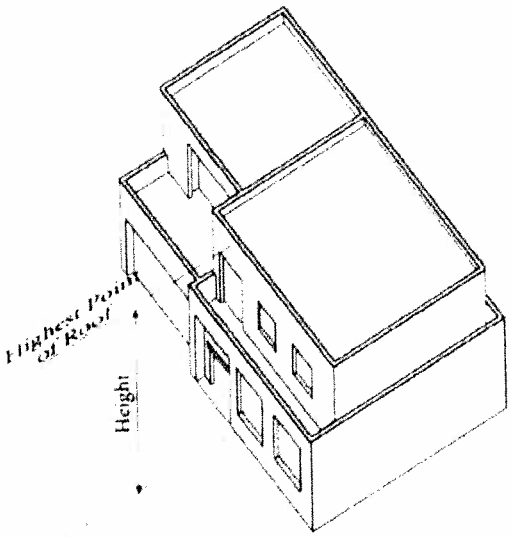

Flat Roof

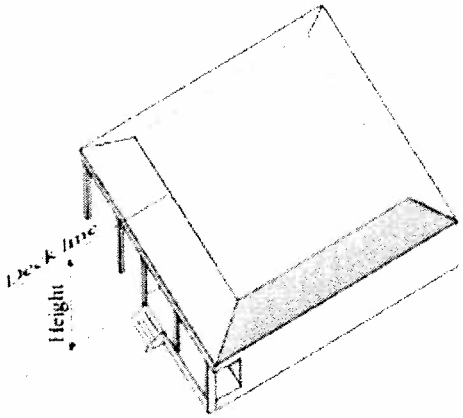

Mansard Roof

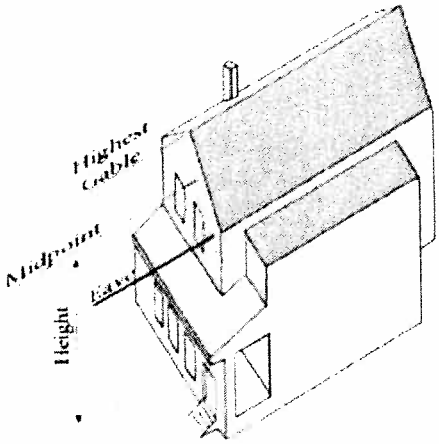

Pitched Roof

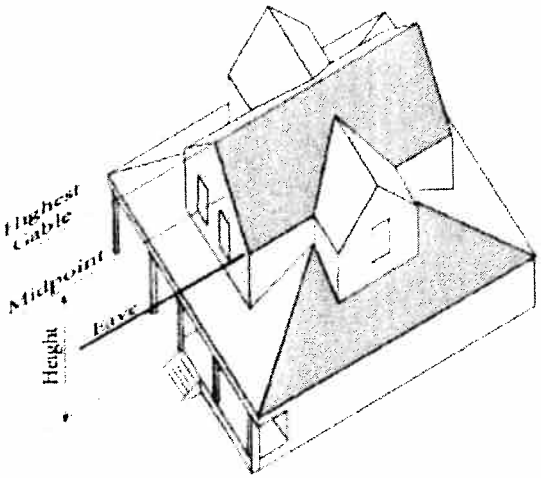

Hipped Roof

XXIII. BUILDING HEIGHT.

GRADE ~~(ADJACENT GROUND ELEVATION).~~ The average elevation of the finished surface of the ground at the midpoints of all walls or edges of a structure, or ~~The~~ the lowest point of elevation of the finished surface of the ground between the exterior wall of a building or edge of a structure and the property line, if it is less than five feet distance from said wall or edge. In case walls are parallel to and within five feet of, or the edge of a structure with no walls is within five feet of a public sidewalk, alley or public way, the grade shall be the elevation of the sidewalk, alley or public way.

[Note: Figure III below is existing in the Development Code]

III. GRADE.

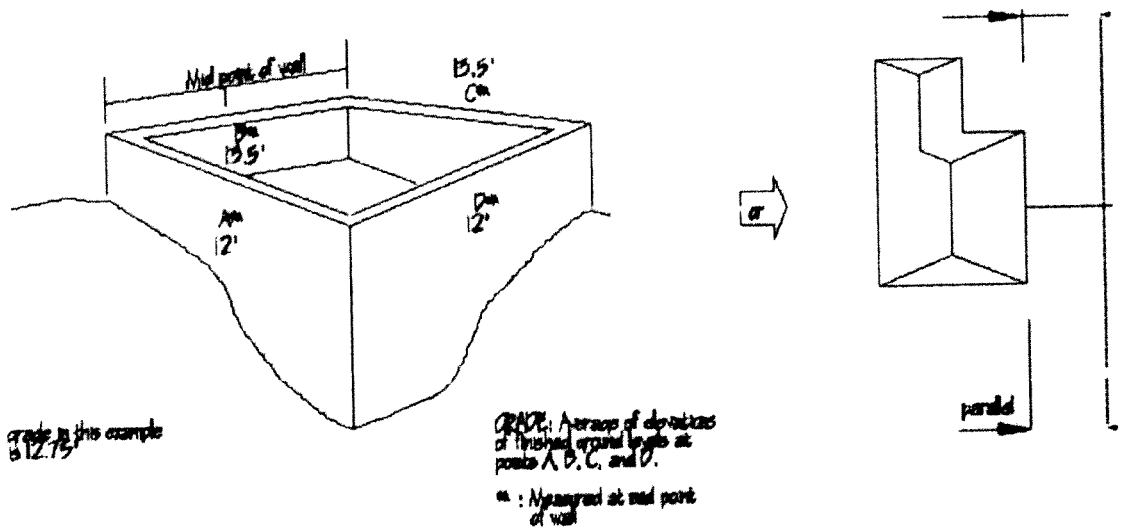

PLANNING COMMISSION RESOLUTION NO. 2009-267

A RESOLUTION OF THE PLANNING COMMISSION OF THE CITY OF NEWBERG RECOMMENDING THAT THE CITY COUNCIL AMEND THE NEWBERG DEVELOPMENT CODE STANDARDS BY ADDING AN OPTIONAL "FLEXIBLE DEVELOPMENT TRACK" THAT WOULD ALLOW DEVELOPERS FLEXIBILTY IN SOME DEVELOPMENT STANDARDS, PROVIDED THEY COMMIT TO PROVIDING SOME AFFORDABLE HOUSING

RECITALS:

1. On May 8, 2008, the Newberg City Council passed Resolution No. 2008-2781, establishing the Housing for Working Families Ad Hoc Committee. The charge of the Committee was to "... identify and recommend tools appropriate for the Newberg community that are intended to encourage the development of housing for working families."

2. On May 4, 2009, the Housing for Working Families Ad Hoc Committee presented the *Newberg Affordable Housing Action Plan* to the City Council. At that meeting, City Council passed Resolution No. 2009-2843, stating their acceptance of the Plan.

3. One of the recommended actions within the *Newberg Affordable Housing Action Plan* is that the City should consider the adoption of various amendments to the Newberg Development Code. Action 4.1 of the Plan proposes an optional "Flexible Development Track" that would allow developers flexibility in some development standards, provided they commit to providing some affordable housing.

4. On July 29, 2009, notice of a public hearing on the proposed amendments was published in the Newberg Graphic. The same notice was posted in four public places on July 23, 2009 and mailed to interested parties on July 23, 2009.

5. On August 13, 2009, the Newberg Planning Commission held a public hearing on the proposed amendments. At that meeting, the Planning Commission decided to continue the public hearing at their September 9, 2009 meeting.

6. On August 26, 2009, notice of the continued public hearing on the proposed amendments was published in the Newberg Graphic. The same notice was posted in four public places on August 19, 2009 and mailed to interested parties on August 20, 2009.

7. On September 10, 2009, the Newberg Planning Commission held the continued public hearing on the proposed amendments.

NOW THEREFORE, BE IT RESOLVED by the Planning Commission of the City of Newberg that it recommends that the City Council approve the amendments to the Newberg Development Code as shown in Exhibit A, contingent upon the Planning Commission's review of additional proposed development code amendments described in the Newberg Affordable Housing Action Plan.

This recommendation is based on the staff report and testimony.

DATED this 10th day of September, 2009

AYES: 4 NAYS: 0 ABTAIN: 0 ABSENT: 3

ATTEST:

Planning Commission Secretary

Planning Commission Chair

Exhibit A: Proposed Newberg Development Code Amendments

Exhibit A to Resolution 2009-267
Proposed Newberg Development Code Amendments

§ 151.230 FLEXIBLE DEVELOPMENT TRACK PURPOSE AND INTENT

The purpose of this section is to provide an optional "Flexible Development Track" that would allow developers flexibility in some development standards, provided they commit to providing some affordable housing. Under this proposal, a developer who voluntarily chooses to use this track would be given flexibility in development standards intended to make it easier and less expensive to create housing. In exchange for this flexibility, the developer would have to provide at least a certain amount of affordable housing. The obligation to provide affordable housing can be achieved with any combination of market-rate housing, provision of affordable housing units guaranteed to remain affordable in the long-term, and/or in-lieu credits though cash contributions to the City of Newberg Housing Trust Fund.

§ 151.231 FLEXIBLE DEVELOPMENT STANDARDS

Developers choosing this option may elect to use any/all of the following flexible development standards. Use of this option will require the developer to make provisions for affordable housing as described in § 151.232.

(A) *Lot Standards:*

(1) *Street frontage.* Lot frontage or easement width required may be reduced from 25 feet to 20 feet.

(2) *Lot depth to width ratio.* Lot depth to width ratio may exceed standards otherwise permitted.

(3) *Other lot dimensions.* Other required lot dimensions, such as lot width, may be reduced without limit.

(4) *Rounding up credit for "partial" lots.* Where the maximum number of lots allowed is a fraction the number of lots allowed may be rounded (with decimals 0.5 or over rounded up). For example, where zoning allows 10.8 lots, applicant may round up to 11 lots. Lot sizes within the development may be reduced by up to 25% in order to attain the partial lot.

(5) Multi-unit density bonus. Multi-unit residential developments may increase the allowed number of units by up to 5 percent beyond the maximum density otherwise allowed in the zone.

(6) *Minimum lot size.* Minimum lot sizes may be reduced as follows:

(a) R-2: Reduce from 3,000 square feet to 2,500 square feet

(b) R-3: Reduce from 3,000 square feet to 1,500 square feet

(c) R-P Reduce from 3,000 square feet to 2,500 square feet

(B) Site Design Standards.

(1) *Side yard setback.* Side yard setback may be reduced to 3 feet.

(2) *Front yard setback.* Front yard setbacks may be reduced to 10 feet.

(3) *Coverage.* Lot coverage, parking coverage or combined coverage may be increased an additional 10% beyond the applicable standard (for example, from 30% to 40%).

(C) Street and Sidewalk Standards.

(1) *Sidewalk location.* Sidewalks may be constructed on one side only of local streets.

(2) *Sidewalk type.* Curb-side sidewalks, 6-feet in width, may be constructed on local streets, eliminating required planter strips.

(3) *Street width.* Subject to Fire Marshal and City Engineer approval, street width may be reduced to 28-feet with parking on both sides where, in their determination, adequate emergency access, large vehicle access, and parking can be maintained.

(4) *Right-of-way width.* Right-of-way width may be reduced, depending upon the street/planter strip/sidewalk configuration. In no case shall the right-of-way width be less than 38 feet.

§ 151.232 FLEXIBLE DEVELOPMENT STANDARDS – AFFORDABLE HOUSING PROVISION

A developer that chooses to utilize the flexible development standards described in § 151.231 shall provide affordable housing, as detailed below. The required amount of affordable housing to be provided will be at least 50% of the extra units above what would normally be expected in the development. "What would normally be expected" would be calculated as 80% of the target density. The formula is as follows:

50% x [#dwelling units in development – (target density in zone {du/ac} x lot size in acres x 80%)] = required Equivalent Affordable Dwelling Units (EADUs).

The following describe affordable dwelling units:

(A) *Long-term Affordable Dwellings*

(1) *Moderate income units.* One moderate income unit equals 0.75 EADUs. Moderate income units are defined as residential units on the subject property reserved for qualifying buyers or renters with incomes at or below one hundred percent (100%) of Newberg area median income.

(2) *Low income units.* One low income unit equals 1.0 EADUs. Low income units are defined as residential units on the subject property reserved for qualifying buyers or renters with incomes at or below eighty percent (80%) of Newberg area median income.

(3) *Very low income units.* One very low income unit equals 1.25 EADUs. Very low income units are defined as residential units on the subject property reserved for qualifying buyers or renters with incomes at or below fifty percent (50%) of Newberg area median income.

(4) In order to use this option, the applicant must ensure a legal mechanism is in place to guarantee that the requisite long-term affordable housing units remain affordable for a period of not less than 25 years. Potential tools to guarantee long-term affordability of the units include deed restrictions, mortgage encumbrances, or agreements made in order to receive federal funding. The agreement must be approved by the City Attorney.

(5) The applicant also may meet this obligation by transferring title to a sufficient amount of buildable land for development of equivalent number of affordable housing units, as prescribed in subsections (A)(1), (A)(2) and/or (A)(3) above, to a non-profit (IRC 501(c)(3)) affordable housing developer or comparable development corporation for the purpose of complying with subsections (A)(1), (A)(2) and/or (A)(3), above. The land shall be located within the project, except as provided in § 151.232 (C), and all needed public facilities shall be extended to the area or areas proposed for transfer. If to be transferred, ownership of the land shall be transferred to the affordable housing developer or development corporation in accordance with said development agreement.

(6) The Director shall determine the Newberg area median income, using the best available data.

(7) The maximum monthly rental rates for moderate, low, and very low income units shall be determined as follows:

(a) For moderate income units, the maximum monthly rental rate shall be 30 percent of the area monthly median income minus estimated average monthly tenant paid utility costs.

(b) For low income units, the maximum monthly rental rate shall be 24 percent of the area monthly median income minus estimated monthly tenant paid utility costs.

(c) For very low income units, the maximum monthly rental rate shall be 15 percent of the area monthly median income minus estimated monthly tenant paid utility costs.

(8) For for-sale, long term affordable dwelling units, the seller shall demonstrate that the sales price does not exceed the following:

(a) For moderate income units, the maximum sales price shall be set such that a typical purchaser's total annual mortgage, homeowner's insurance, and property tax payments will not exceed 30 percent of the annual area median income.

(b) For low income units, the maximum sales price shall be set such that a typical purchaser's total annual mortgage, homeowner's insurance, and property tax payments will not exceed 24 percent of the annual area median income.

(c) For very low income units, the maximum sales price shall be set such that a typical purchaser's total annual mortgage, homeowner's insurance, and property tax payments will not exceed 15 percent of the annual area median income.

(9) The maximum rental rates and maximum sales prices described in (A)(7) and (A)(8) above shall be adjusted for inflation. In addition, they may be adjusted uniformly each year such that the rates/prices equal market value at the end of the 25-year period. For example, the price of a unit that initially has a maximum sales price that is 75 percent of market value may be sold at 85 percent of market value after 10 years, and at 95 percent of market value after 20 years.

(B) *Market rate affordable units.* Market rate affordable units are dwellings on the subject property that, by virtue of their size, are more likely to be affordable on the open market. Such market rate units must meet one or more of the following criteria:

(1) studio or one-bedroom dwellings with less than 600 square feet gross floor area.

(2) two-bedroom dwellings with less than 800 square feet gross floor area.

(3) dwellings containing three or more bedrooms and containing less than 1,000 square feet floor area.

(4) accessory dwelling units.

Market rate affordable units equal 0.5 EADUs.

(C) *Construction of off-site units.* At the Planning and Building Director's discretion, long-term affordable dwellings or market rate affordable units may be constructed at an alternate location in the City and equal 75% of the EADUs of on-site units. The off-site unit may not be used as affordable dwelling points for any other project. If this option is selected, the applicant shall file an agreement with the City stating the election to use the off-site unit as credit for the applicant's project. A property for construction of the off-site units must be secured and platted in a reasonable time frame, as determined at the Planning and Building Director's discretion. The off-site units must be constructed within 2 years of the completion of the principal on-site development.

(D) *Purchase of affordable dwelling in-lieu credits.* In-lieu of constructing affordable dwelling units, the applicant may purchase affordable dwelling in-lieu credits by paying a fee to the City of Newberg Housing Trust Fund. The fee shall be assessed at the time of final plat for a subdivision, or at time building permit issuance for other projects. The price of each credit shall be established by resolution of the City Council. The price of a credit shall be calculated based on the following:

The estimated average purchase price for a market-rate dwelling unit suitable for a median sized family in Newberg, minus the estimated average purchase price affordable to a median sized low-income family in Newberg.

PLANNING COMMISSION RESOLUTION NO. 2009-272

A RESOLUTION OF THE PLANNING COMMISSION OF THE CITY OF NEWBERG RECOMMENDING THAT THE CITY COUNCIL AMEND THE NEWBERG DEVELOPMENT CODE STANDARDS REGARDING DUPLEXES IN THE R-1 ZONE, ACCESSORY DWELLING UINTS (ADUs), HOUSING IN THE C-1 ZONE, PLANNED UNIT DEVELOPMENTS (PUDs), LEGAL NON-CONFORMING HOUSING RECONSTRUCTION, AND PARKING REQUIREMENTS

RECITALS:

1. On May 8, 2008, the Newberg City Council passed Resolution No. 2008-2781, establishing the Housing for Working Families Ad Hoc Committee. The charge of the Committee was to "... identify and recommend tools appropriate for the Newberg community that are intended to encourage the development of housing for working families."

2. On May 4, 2009, the Housing for Working Families Ad Hoc Committee presented the *Newberg Affordable Housing Action Plan* to the City Council. At that meeting, City Council passed Resolution No. 2009-2843, stating their acceptance of the Plan.

3. The *Newberg Affordable Housing Action Plan* recommends that the City should consider the adoption of various amendments to the Newberg Development Code regarding duplexes in the R-1, accessory dwelling units (ADUs), housing in the C-1 zone, planned unit developments (PUDs), legal non-conforming housing reconstruction, and parking requirements.

4. On October 24, 2009, notice of a public hearing on the proposed amendments was published in the Newberg Graphic. The same notice was posted in four public places on October 22, 2009 and mailed to interested parties on October 22, 2009.

5. On November 12, 2009, the Newberg Planning Commission held a public hearing on the proposed amendments.

NOW THEREFORE, BE IT RESOLVED by the Planning Commission of the City of Newberg that it recommends that the City Council approve the amendments to the Newberg Development Code as shown in Exhibit A, contingent upon the Planning Commission's review of additional proposed Development Code amendments described in the Newberg Affordable Housing Action Plan.

This recommendation is based on the staff report and testimony.

DATED this 12th day of November, 2009

AYES: 5 NAYS: 2 (Haug, Stuhr) ABTAIN: 0 ABSENT: 0

ATTEST:

Dawn Karen Bevill
Planning Commission Secretary

Planning Commission Chair

Exhibit A: Proposed Newberg Development Code Amendments

(This page left blank, intentionally)

Exhibit A to Resolution 2009-272
Proposed Newberg Development Code Amendments

Editorial Key:

Normal = existing text
~~Strikethrough~~ = proposed text deletion
Underline = proposed text additions

SECTION 1: Newberg Development Code § 151.145 shall be amended as follows:

151.145 SINGLE FAMILY NON-CONFORMING USE EXEMPTION.

(A) Where a single family, duplex, or multi-family dwelling is a legal, non-conforming use in any zoning district, it may be rebuilt if partially or completely destroyed. ~~This does not apply to any other type of residential use or other non-single family use (see § 151.146 for other types of uses).~~ If a single family, duplex, or multi-family dwelling is completely or partially destroyed, it may be rebuilt either in conformance with the setback, height restriction, and other regulations of the district in which it is located or with the standards of the R-2 Zoning District. The minimum lot area requirement does not apply.

SECTION 2: Newberg Development Code § 151.226 (F) shall be amended as follows:

PD PLANNED UNIT DEVELOPMENT REGULATIONS

§ 151.226 GENERAL PROVISIONS.

(F) Density. Except as provided in § 151.123 relating to sub-districts, dwelling unit density provisions for residential planned unit developments shall be as follows:

(1) Maximum density.

(a) Except as provided in adopted refinement plans, the maximum allowable density for any project shall be as follows:

District	~~Maximum Density per Gross Acre~~ Density Points
R-1	175 density points ~~as calculated below~~ per gross acre, as calculated in section (b) below
R-2	310 density points ~~as calculated below~~ per gross acre, as calculated in section (b) below
R-3	640 density points ~~as calculated below~~ per gross acre, as calculated in section (b) below

RP	310 density points ~~as calculated below~~ per gross acre, as calculated in section (b) below
C-1	As per required findings
C-2	As per required findings
C-3	As per required findings

(b) Density point calculations in the following table are correlated to dwellings based on the number of bedrooms, which for these purposes is defined as an enclosed room which is commonly used or capable of conversion to use as sleeping quarters. Accordingly, family rooms, dens, libraries, studies, studios, and other similar rooms shall be considered bedrooms if they meet the above definitions, are separated by walls or doors from other areas of the dwelling and are accessible to a bathroom without passing through another bedroom. Density points may be reduced at the applicant's discretion by 25% for long term affordable dwelling units as follows:

Density Point Table

Dwelling Type	Density Points: Standard Dwelling	Density Points: Long Term Affordable Dwelling Unit
Studio and efficiency	12	9
One bedroom	14	11
Two bedroom	21	16
Three bedroom	28	21
Four or more bedrooms	35	26

The density points in the right hand column are applicable to long term affordable dwelling units, provided the dwelling units meet the affordability criteria under § 151.232 (A) for developments using the Flexible Development Standards.

SECTION 3: Newberg Development Code § 151.281 shall be amended as follows:

ZONING DISTRICTS

Part 1. R-1 LOW DENSITY RESIDENTIAL DISTRICT

151.281 PERMITTED BUILDINGS AND USES.

In the R-1 Low Density Residential District the following buildings and uses are permitted as hereinafter specifically provided, subject to the general provisions and exceptions set forth in this code:

(A) Accessory buildings and uses normal and incidental to the uses permitted in this section and § 151.282.

(B) Accessory dwelling units (subject to the provisions of § 151.678).

(~~B~~C) Agricultural uses, limited to the following:

(1) Berry and bush crops.

(2) Flower gardening.

(3) Orchards, tree crops, the raising and harvesting of.

(4) Truck gardening, the raising and harvesting of vegetables for home consumption.

(~~C~~D) Churches, subject to the following conditions:

(1) Dedication and improvements of public streets.

(2) Conveyance or dedication of public utility easements, as determined by the city.

(~~D~~E) Churches, when using existing buildings.

(~~E~~F) Day nurseries.

(~~B~~G) Duplex, one per lot subject to density restrictions.

(~~F~~H) Group care homes.

(~~G~~I) Home occupation.

(~~H~~J) Manufactured homes on individual lots provided the homes meet the development standards set forth in §§ 151.640 through 151.642.

(~~I~~K) Modular homes.

(~~J~~L) Open space.

(~~K~~M) Private and public parks, playgrounds and golf courses.

(~~L~~N) Public and semi-public buildings essential to the physical and economic welfare of an area, such as fire stations, substations and pump stations. Interior yards for these uses shall be a minimum of 25 feet in width. No stockpiling or storage of materials shall be allowed.

(~~M~~O) Single family dwellings (one per lot).

(~~N~~P) Schools; elementary, junior high and high schools and colleges, and related buildings in conjunction therewith, subject to the following conditions:

(1) Dedication and improvement of public streets.

(2) Conveyance or dedication of public utility easements as determined by the city.

(~~O~~Q) Transportation facilities and improvements.

(~~P~~R) Any other building or uses determined to be similar to those listed in this section. Such other uses shall not have any different or more detrimental effect upon the adjoining neighborhood area than the buildings and uses specifically listed in this section.

(Ord. 96-2451, passed 12-2-96; Am. Ord. 99-2505, passed 2-1-99; Am. Ord. 99-2513, passed 8-2-99; Am. Ord. 2000-2537, passed 11-6-00; Am. Ord. 2005-2619, passed 5-16-05)

~~SECTION~~ 4: Newberg Development Code § 151.282 shall be amended as follows:

151.282 BUILDING AND USES PERMITTED CONDITIONALLY.

In addition to the buildings and uses permitted conditionally, listed in § 151.211, the Planning Commission may grant a conditional use permit for the following buildings and uses in accordance with a Type III procedure.

~~(A) Accessory dwelling units (subject to the provisions of § 151.678).~~

(~~B~~A) Ambulance service (satellite facility only, excluding central dispatch and maintenance functions).

(~~C~~B) Bed and breakfast establishments.

(~~D~~C) Community centers.

(~~E~~D) Driving range.

(~~F~~E) ~~Duplex and m~~Multi-family housing, including multiple single family dwellings or duplexes on a single lot, subject to density restrictions and permanent open space provisions of the comprehensive plan.

(~~G~~F) Group care facilities.

(~~H~~G) Hospitals.

(~~I~~H) Nursing homes.

(~~J~~I) Planned unit developments.

(~~K~~J) Telecommunication facility, including radio towers and transmitters which are incorporated into an existing structure or an existing utility pole, and which will not extend above the existing structure or utility pole more than 18 feet. Top hat antenna installations are prohibited.

(~~L~~K) Any building or uses determined to be similar to those listed in this section. Such other uses shall not have any different or more detrimental effect upon the adjoining neighborhood area than the buildings and uses specifically listed in this section.

(Ord. 96-2451, passed 12-2-96; Am. Ord. 99-2505, passed 2-1-99; Am. Ord. 2000-2536, passed 11-6-00; Am. Ord. 2000-2537, passed 11-6-00)

SECTION 5: Newberg Development Code § 151.326 shall be amended as follows

Part 4. RP RESIDENTIAL-PROFESSIONAL DISTRICT

151.326 PERMITTED BUILDINGS AND USES.

In the RP Residential-Professional District, the following buildings and uses are permitted as hereinafter specifically provided, subject to the general provisions and exceptions set forth by this code. All uses permitted in this district except parking areas shall be contained entirely within an enclosed building.

(A) Accessory buildings and uses normal and incidental to the buildings and uses permitted in this section and § 151.327.

(B) Accessory dwelling units (subject to the provisions of § 151.678).

(~~B~~C) Ambulance service (satellite facility only, excluding central dispatch and maintenance functions).

(~~C~~D) Bed and breakfast establishment (two or fewer guest sleeping rooms).

(~~D~~E) Churches; subject to the following conditions:

(1) Dedication and improvement of public streets.

(2) Conveyance or dedication of public utility easements as determined by the city.

(~~E~~F) Clinics.

(~~F~~G) Day nurseries.

(~~G~~H) Dormitories.

(~~H~~I) Duplexes.

(~~I~~J) General office use, provided that the use does not involve any retail activities.

(~~J~~K) Group care homes.

(~~K~~L) Home occupations.

(~~L~~M) Laboratories, biochemical and X-ray.

(~~M~~N) Manufactured homes on individual lots provided the homes meet the development standards as set forth in §§ 151.640 through 151.642.

(~~N~~O) Multiple family dwellings.

(~~O~~P) Offices for the following:

(1) Accountants.

(2) Attorneys.

(3) Physicians, osteopaths, dentists, optometrists, opticians, chiropractors and others licensed by the state to practice the healing arts.

(4) Engineers, architects, landscape architects, surveyors and those engaged in the practice of drafting or graphics.

(5) Insurance brokers.

(6) Lumber brokers.

(7) Real estate sales.

(8) Stockbrokers.

(~~P~~Q) Open space.

(~~Q~~R) Planned unit developments.

(~~R~~S) Private and public parks, playgrounds or community centers.

(~~S~~T) Private parking area. These areas shall exist only as an accessory to a use already provided for within the RP District.

(~~T~~U) Public and semi-public buildings essential to the physical and economic welfare of an area, such as fire stations, substations, and pump stations. Interior yards for these uses shall be a minimum of 25 feet in width. No stockpiling or storage of materials shall be allowed.

(~~U~~V) Single family dwellings (one or more per lot subject to density restrictions).

(~~V~~W) Studios for the following:

(1) Interior decorating.

(2) Photographers.

(3) Artists.

(~~W~~X) Schools; elementary, junior high and high schools and colleges, subject to the following conditions:

(1) Dedication and improvement of public streets.

(2) Conveyance or dedication of public utility easements as determined by the city.

(~~X~~Y) Transportation facilities and improvements.

(~~Y~~Z) Any other building or uses determined to be similar to those listed in this section. Such other uses shall not have any a different or more detrimental effect upon the adjoining neighborhood area than the buildings and uses specifically listed in this section.

(Ord. 96-2451, passed 12-2-96; Am. Ord. 2000-2537, passed 11-6-00; Am. Ord. 2005-2619, passed 5-16-05)

SECTION 6: Newberg Development Code § 151.341 shall be amended as follows

Part 5. C-1 NEIGHBORHOOD COMMERCIAL DISTRICT

151.341 PERMITTED BUILDINGS AND USES.

In the C-1 Neighborhood Commercial District, the following buildings and uses are permitted as hereinafter specifically provided, subject to the general provisions and exceptions set forth in this code:

(A) Accessory buildings and uses normal and incidental to the buildings and uses permitted in this section and § 151.342.

(B) Ambulance service (satellite facility only, excluding central dispatch and maintenance functions).

(C) Bakeries (retail only).

(D) Banks.

(E) Barber and beauty shops.

(F) Bed and breakfast establishments (two or fewer guest sleeping rooms).

(G) Bicycle shops.

(H) Book stores.

(I) Chapels.

(J) Christmas tree sales (outdoor sales) in accordance with this code.

(K) Churches; subject to the following conditions:

(1) Dedications and improvements of public streets.

(2) Conveyance or dedication of public utility easements as determined by the city.

(L) Clinics.

(M) Confectionery stores with fountains (no drive-ins or walk-ups).

(N) Dairy products stores (retail only).

(O) Day nurseries.

(P) Delicatessen stores.

(Q) Dry cleaners, coin operated.

(R) Dwelling units - ~~(~~ On the ground floor, one per lot in conjunction with any other use permitted or conditional use in the C-1 zone~~)~~. On upper floors, dwelling units are unlimited and one parking space per dwelling unit is required.

(S) Fireworks sales (outdoor sales) from June 24 to July 6.

(T) Florist shops.

(U) Gift shops.

(V) Grocery stores or markets.

(W) Group care homes.

(X) Laundromats, hand laundries, and self-service laundries.

(Y) Meat markets.

(Z) Offices for the following:

(1) Accountants.

(2) Attorneys.

(3) Physicians, osteopaths, dentists, optometrists, opticians, chiropractors and others licensed by the state to practice the healing arts.

(4) Engineers, architects, landscape architects, surveyors and those engaged in the practice of drafting or graphics.

(5) Insurance brokers.

(6) Lumber brokers.

(7) Real estate brokers.

(8) Savings and loans.

(9) Stockbrokers.

(AA) Open space.

(BB) Pharmacy or drug stores.

(CC) Planned unit developments.

(DD) Post offices.

(EE) Public and semi-public buildings essential to the physical and economic welfare of an area such as fire stations, substations and pump stations. Interior yards for these uses shall be a minimum of 25 feet in width. No stockpiling or storage of materials shall be allowed.

(FF) Restaurants, except drive-through.

(GG) Shoe repair shops.

(HH) Small animal clinics.

(II) Studios for the following:

(1) Interior decorators.

(2) Photographers.

(3) Artists.

(JJ) Tailor or dressmaking shops.

(KK) Telecommunication facility, including radio towers and transmitters which are incorporated into an existing structure or an existing utility pole, and which will not extend above the existing structure more than 18 feet.

(LL) Telephone and telegraph exchanges.

(MM) Transportation facilities and improvements.

(NN) Variety shops.

(OO) Any other building or uses determined to be similar to those listed in this section. Such other uses shall not have any different or more detrimental effect upon the adjoining neighborhood area than the buildings and uses specifically listed in this section.

(Ord. 96-2451, passed 12-2-96; Am. Ord. 2000-2536, passed 11-6-00; Am. Ord. 2005-2619, passed 5-16-05)

SECTION 7: Newberg Development Code § 151.612 shall be amended as follows

OFF-STREET PARKING REQUIREMENTS

151.612 PARKING SPACES REQUIRED

Use	Minimum Parking Spaces Required
RESIDENTIAL TYPES	
Dwelling, multiple or two family or single family	2 for each dwelling unit; where fractioned, next highest full unit
Studio or 1 bedroom unit	1 per dwelling unit
2 bedroom unit	1.5 per dwelling unit
3 and 4 bedroom unit	2 per dwelling unit
5 or more bedroom unit	0.75 spaces per bedroom
Unassigned spaces	If a development is required to have more than 10 spaces on a lot then it must provide some unassigned spaces. At least 15% of the total required parking spaces must be unassigned and be located for convenient use by all occupants of the development. The location shall be approved by the Director.
Visitor spaces	If a development is required to have more than 10 spaces on a lot then it must provide at least 0.2 visitor spaces per dwelling unit.
On-street parking credit	On-street parking spaces may be counted toward the minimum number of required spaces for developments required to have more than 10 spaces on a lot. The on-street spaces must be directly adjoining and on the same side of the street as the subject property, must be legal spaces that meet all City standards, and cannot be counted if they could be removed by future street widening or a bike lane on the street.
Dwellings in Neighborhood Commercial District (C-1), and Central Business District (C-3)	1 for each dwelling

Dwelling, single family or two family	2 for each dwelling unit on a single lot
Fraternities, sororities, cooperatives and dormitories	1 for each three occupants for which sleeping facilities are provided
Hotels, motels, motor hotels, etc.	1 for each guest room
Rooming or boarding houses	1 for each guest room
Special needs housing	1 space per 3 beds or actual parking needs as demonstrated through a parking analysis.

SECTION 8: Newberg Development Code § 151.615 shall be amended as follows:

151.615 PARKING AREA AND SERVICE DRIVE IMPROVEMENTS.

All public or private parking areas, outdoor vehicle sales areas, and service drives shall be improved according to the following:

(A) All parking areas and service drives shall have surfacing of asphaltic concrete or portland cement concrete or other hard surfacing such as brick or concrete pavers. Other durable and dust-free surfacing materials may be approved by the Director for infrequently used parking areas. All parking areas and service drives shall be graded so as not to drain storm water over the public sidewalk or onto any abutting public or private property.

(B) All parking areas shall be designed not to encroach on public streets, alleys, and other right-of-ways. Parking areas shall not be placed in the area between the curb and sidewalk or, if there is no sidewalk, in the public right-of-way between the curb and the property line. The Director may issue a permit for exceptions for unusual circumstances where the design maintains safety and aesthetics.

(C) All parking areas, except those required in conjunction with a single family or two family dwelling, shall provide a substantial bumper which will prevent cars from encroachment on abutting private and public property.

(D) All parking areas, including service drives, except those required in conjunction with single family or two family dwellings shall be screened in accordance with § 151.580(B).

(E) Any lights provided to illuminate any public or private parking area or vehicle sales area shall be so arranged as to reflect the light away from any abutting or adjacent residential district.

(F) All service drives and parking spaces shall be substantially marked and comply with § 151.616.

(G) Parking areas for residential uses shall not be located in a required front yard, except as follows:

(1) Attached or detached single family or two family - parking is authorized in a front yard on a service drive which provides access to an improved parking area outside the front yard.

(2) Three or four family - parking is authorized in a front yard on a service drive which is adjacent to a door at least seven feet wide intended and used for entrance of a vehicle (Fig. XII).

(H) A reduction in size of the parking stall may be allowed for up to a maximum of 30% of the total number of spaces to allow for compact cars. For high turn-over uses, such as convenience stores or fast-food restaurants, at the discretion of the Director, all stalls will be required to be full-sized.

(I) The review body may approve use of tandem parking where such such tandem spaces would reasonably be accessible to a single tenant.

SECTION 8: Newberg Development Code § 151.615 shall be amended as follows

Part 5. ACCESSORY DWELLING UNITS

151.678.2 DEVELOPMENT STANDARDS.

(A) Location. Accessory dwelling units are permitted ~~as conditional uses in the R-1 zone and as outright permitted uses~~ in the R-1, R-2 ~~and~~ , R-3, and R-P zones.

(B) Limitations. An accessory dwelling unit is permitted providing there is compliance with all of the following standards:

(1) An accessory dwelling unit may be created within or as an addition to a detached or attached single family structure or as a free-standing accessory building.

(2) An accessory dwelling unit may not exceed 50% of the size of the primary unit, up to a maximum of ~~800~~ 1,000 square feet.

(3) The number of residents permitted to inhabit the accessory dwelling unit is regulated by the Uniform Building Code.

~~(4) Either the primary or accessory dwelling unit must be owner-occupied.~~

(~~5~~4) In addition to the number of parking spaces required for the primary residence, as established in § 151.612, one on-site parking space shall be provided for the accessory dwelling unit. This parking space shall be paved and/or covered.

(~~6~~5) The front door of the accessory dwelling unit shall not be located on the front facade of the primary residence unless the door is already existing.

(6) Second story windows 10 feet or less from the property line must be opaque.

(7) There shall be compliance with all of the development standards established in the base zone.

(Ord. 99-2505, passed 2-1-99)