RESOLUTION NO. 2011-2936

A RESOLUTION ADOPTING THE REVISED STANDARD DESIGN DETAILS FOR THE CONSTRUCTION OF PUBLIC UTILITIES IN THE CITY OF NEWBERG

RECITALS:

1. Since their adoption by the City Council with Resolution No. 2000-2254 in July, 2000, the City's Engineering staff has utilized the City's Standard Drawings in the design of public infrastructure and has required private developers to utilize the drawings in the design and construction of public infrastructure in their projects.

2. As authorized by Resolution No. 2000-2254, the City Engineer's staff has updated continually the Standard Drawings to reflect the progression of the state of the art of engineering practice and to enhance the clarity of requirements for communication to private developers.

3. The Standard Drawings are currently referred to as the Standard Design Details.

4. The City Engineer, Public Works Director, or his/her designee has reviewed and approved each change at the time the change was made. The Standard Design Details are deemed by the current Public Works Director to be accurate, complete, and ready for use by staff and private developers constructing public improvements.

5. Resolution No. 2000-2254 requires staff to request the Council to affirm the standard drawings when they are substantively changed, or when ten (10) years have passed.

6. The differences between the Standard Design Details and the Standard Drawings are listed in Exhibit "A". The Standard Design Details are included as Exhibit "B". The Standard Drawings adopted by Resolution No. 2000-2254 are included as Exhibit "C". Exhibits "A", "B", and "C" are hereby attached and by this reference incorporated.

THE CITY OF NEWBERG RESOLVES AS FOLLOWS:

1. That the Standard Design Details included herein as Exhibit "B" are adopted as the current standards for the construction of public infrastructure in the City of Newberg. Exhibit "B" is hereby adopted and by this reference incorporated.

2. That future changes, amendments and new drawings may be authorized by the Public Works Director as he/she deems necessary and prudent.

3. That when the Standard Design Details are once again substantively changed, or when ten (10) years have passed, the staff will once again request the Council to affirm the Standard Design Details, as they are then constituted.

➢ **EFFECTIVE DATE** of this resolution is the day after the adoption date, which is: March 22, 2011.

ADOPTED by the City Council of the City of Newberg, Oregon, this 21st day of March 2011.

Norma I. Alley

Norma I. Alley, City Recorder

ATTEST by the Mayor this 22nd day of March 2011.

Bart Rierson

Bart Rierson, Council President

LEGISLATIVE HISTORY

By and through _____ Committee at ___/___/____ meeting. Or, _X_ None.
(committee name) *(date)* *(check if applicable)*

EXHIBIT "A" TO
RESOLUTION NO. 2011-2936

Differences between Standard Drawings (2000) and Standard Design Details (2011)

General Changes:

- Name changed from "Standard Drawings" to "Standard Design Details"
- Details have been re-ordered and re-numbered
- Details have been re-drafted using industry-standard drafting software
- Details have been re-drafted to improve appearance and clarity
- Some detail dimensions have been slightly adjusted to reflect currently available parts and materials
- More elaborate text and labeling has been added to clarify requirements

Specific Changes:

- Details which have been eliminated
  - 302 Thrust Blocking
  - 303 Vertical Thrust Blocking
  - 304 Straddle Block
  - 316 Reduced Pressure Backflow Device (Above Ground)
  - 317 Reduced Pressure Backflow Device (Below Ground)
  - 405 Valley Gutter Catch Basin
  - 519 Pavement Seal Coat
  - 526 Street Planting

- New Details which have been added
  - 105 Residential Fences, Walls, and Vision Clearance Areas
  - 106 Fences and Walls Interior Lots
  - 107 Tree Grate and Frame
  - 212 Double WYE Service Branch
  - 306 Joint Restraint
  - 318 Water Service for 3" and Larger
  - 319 Trench Dam
  - 408 Alternate Catch Basin
  - 409 Oversized Pelican Catch Basin

410 Supersized Pelican Catch Basin
411 Storm Water Manhole Frame and Cover
516B Street Barricade Post Support Detail
524B Typical Sign Assembly
525B Standard Signpost Concrete Applications
529 Approved Fire Department Turnarounds
601 Construction Entrance
602 Silt Fence
603 Straw Bale Barrier
604 Field Inlet Protection
605 Inlet Protection

- Details which have been substantively changed to reflect current industry standards
  102 Utility Service Locations
  204 48" Standard Manhole
  205 Shallow Manhole
  206 Inside Drop Manhole
  302 Water Tapping Sleeves
  307 Standard ¾" and 1" Water Service
  308 Double Water Service
  309 Standard 1 ½" and 2" Water Service
  310 Water Line Crossing
  314 1" Combination Air-Vacuum Release Assembly
  505 Curb Ramp Locations
  506 Sidewalk Ramp Type "A" Sidewalk
  507 Sidewalk Ramp Type "B" Sidewalk
  516A Street Barricades
  517 Trench Paving
  523 Sign Clearances
  524A Street Sign and Post Locations

EXHIBIT "B" TO
RESOLUTION NO. 2011-2936

STANDARD DESIGN DETAILS 2011

EXHIBIT "B" TO
RESOLUTION NO. 2011-2936

City of Newberg
Standard Design Details

General Information	**100 Series**
Tree and Shrub Clearances	101
Utility Service Locations	102
Utilities Plan	103
Bollard	104
Residential Fences, Walls, and Clearance Areas	105
Fences and Walls Interior Lots	106
Tree Grate and Frame	107
Waste Water	**200 Series**
Trench Backfill	201
Pipe Bedding	202
Manhole Base	203
48” Standard	204
Shallow Manhole	205
Inside Drop Manhole	206
Outside Drop Manhole	207
Offset Manhole	208
Waste Water Manhole Frame and Cover	209
Clean Out	210
Service Branch	211
Double WYE Service Branch	212
Traffic Box	213
Manhole Abandonment	214
Manhole Removal	215
Water	**300 Series**
Water Pipe Bedding	301
Water Tapping Sleeves	302
Valve Box Assembly	303
Valve Box and Cover	304
MJ Holding Spool	305
Joint Restraint	306
Standard 3/4” and 1” Water Service	307
Double Water Service	308
Standard 1 ½” and 2” Water Service	309

Water Line Crossing	310
Blow-Off Assembly	311
Fire Hydrant Assembly	312
Valve Locations and Spacing	313
1” Combination Air-Vacuum Release Assembly	314
Cathodic Protection	316
Vault and Water Service	317
Water Service for 3” and Larger	318
Trench Dam	319
Storm Sewer	**400 Series**
Catch Basin	401
Catch Basin Frame and Grate	402
Ditch Interceptor Type A	403
Ditch Interceptor Frame and Grate Type A	404
Ditch Interceptor Type B	405
Ditch Interceptor Type B Grate	406
Pelican Catch Basin	407
Alternate Catch Basin	408
Oversized Pelican Catch Basin	409
Supersized Pelican Catch Basin	410
Storm Water Manhole Frame and Cover	411
Street	**500 Series**
Curb and Gutter	501
Curb Type “C”	502
Sidewalk Type “A”	503
Sidewalk Type “B”	504
Curb Ramp Locations	505
Sidewalk Ramp Type “A” Sidewalk	506
Sidewalk Ramp Type “B” Sidewalk	507
Driveway Apron Curb Cut Type “A” Sidewalk	508
Driveway Apron Curb Cut Type “B” Sidewalk	509
Commercial Driveway	510
Industrial Driveway	511
Cul-de-sac	512
Residential Street Cross Section	513
Intersection Paving Plan	514
Street Monumentation	515
Street Barricades	516A
Street Barricade Post Support Detail	516B
Trench Paving	517

Pavement Seal Coat Pattern	518
Rain Drain Curb Cut Out	519
Asphalt Overlay Typical Section	520
Street Light	522
Sign Clearances	523
Street Sign and Post Locations	524A
Typical Sign Assembly	524B
Standard Signpost Ground Applications	525A
Standard Signpost Concrete Applications	525B
Pavement Milling	526
Structural Street Sections	527
Valley Gutter	528
Approved Fire Department	529
Erosion Control	**600 Series**
Construction Entrance	601
Silt Fence	602
Straw Bale Barrier	603
Field Drain Inlet Protection	604
Inlet Protection	605

EXHIBIT "B" TO
RESOLUTION NO. 2011-2936

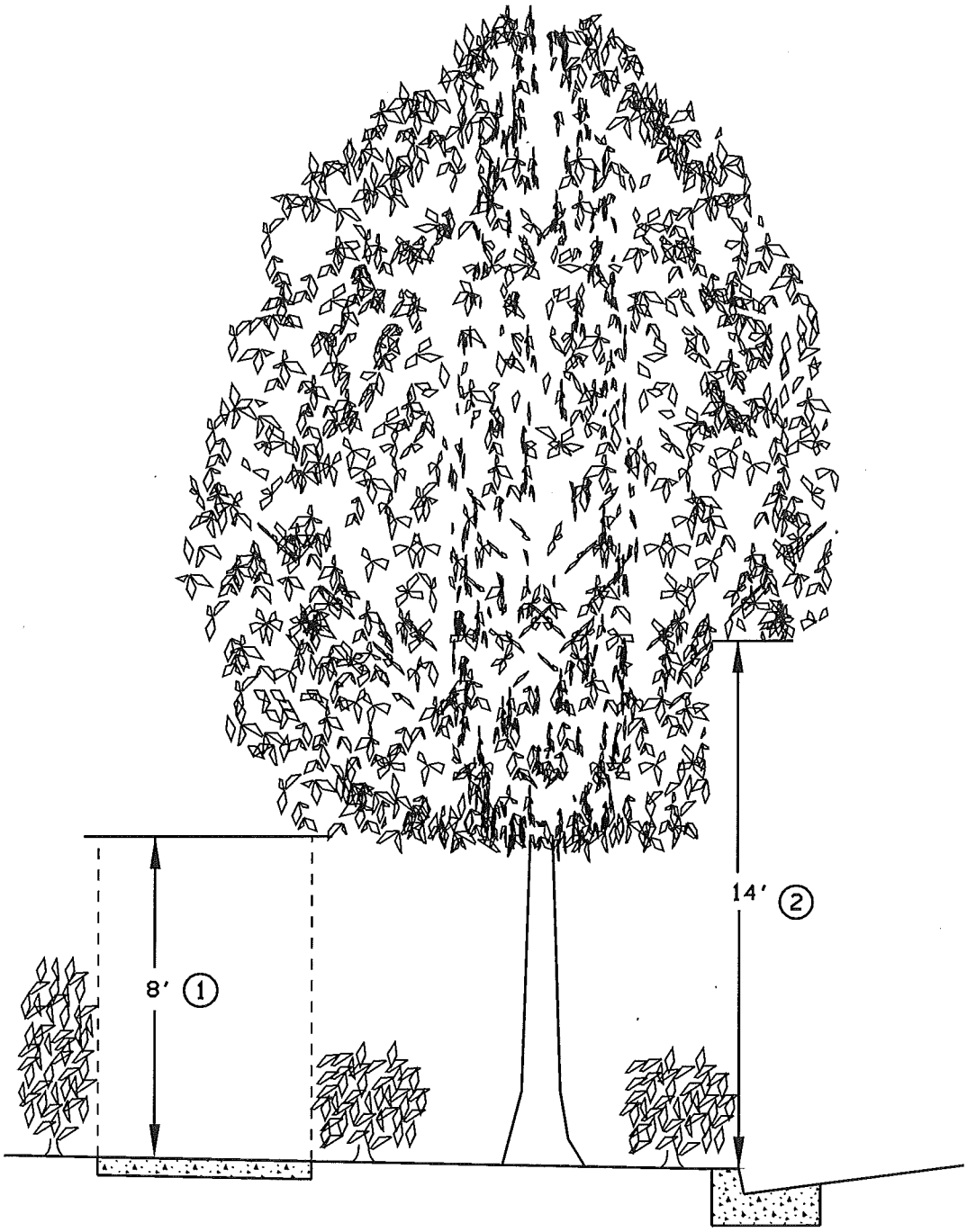

① MAINTAIN 8' OF CLEARANCE BETWEEN SIDEWALK AND TREE LIMBS. NO OBSTRUCTIONS MAY PROTRUDE INTO SIDEWALK TRAVEL AREA.

② MAINTAIN 14' OF CLEARANCE BETWEEN STREET GRADE AND TREE LIMBS.

City of Newberg
PUBLIC WORKS ENGINEERING DIVISION
414 E. FIRST STREET NEWBERG, OREGON 97132

REVISIONS:

TREE & SHRUB CLEARANCES

SCALE:	N.T.S.
DATE:	May 2007
APPROVED BY:	D. Danicic
STANDARD DRAWING	101

EXHIBIT "B" TO
RESOLUTION NO. 2011-2936

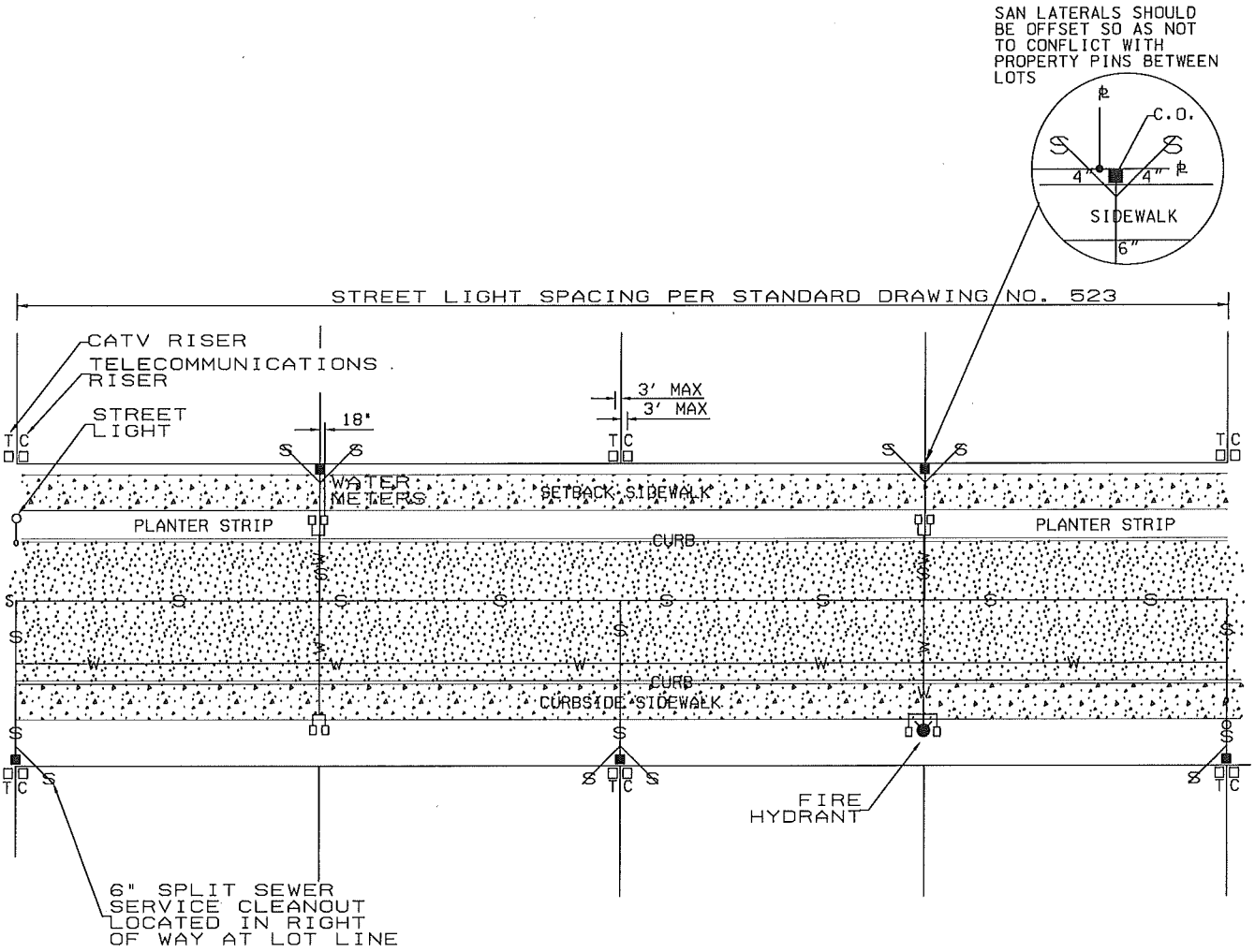

NOTES
1. ALL ABOVE GROUND FIXTURES ARE TO BE ALIGNED WITH PROPERTY LINE WITHIN TOLERANCES SHOWN.
2. VARIATION FROM THIS STANDARD ALLOWED ONLY WITH THE APPROVAL OF THE CITY ENGINEER.
3. THE LOCATION OF UNDERGROUND UTILITIES IS SHOWN ON STANDARD DRAWING 103, UTILITIES PLAN.

City of Newberg PUBLIC WORKS ENGINEERING DIVISION 414 E. FIRST STREET NEWBERG, OREGON 97132 PHONE 503-537-1240 - FAX 503-537-1277	REVISIONS: 11-22-2010	UTILITY SERVICE LOCATIONS	SCALE: N.T.S. DATE: May 2007 APPROVED BY: D. Danicic STANDARD DRAWING 102

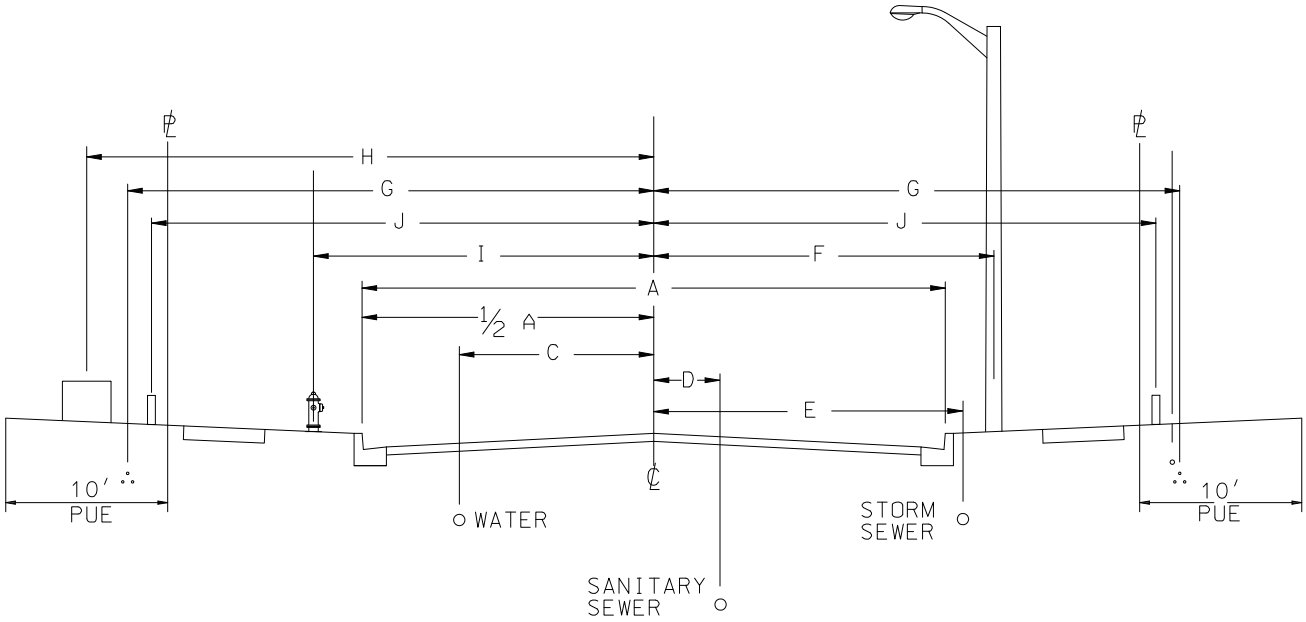

A	B	C	D	E	F	G	H	I	J
STREET WIDTH	ROW WIDTH	WATER	SAN. SEWER	STORM SEWER	STREET LIGHT	PUBLIC UTIL'S.	TRANSFORMER	FIRE HYDRANT	PEDESTAL
32'	54'-60'	12'	4'	*	19'	32'	32'	19'	31'
34'	60'	13'	4'	*	20'	32'	32'	20'	31'
36'	60'	14'	4'	*	21'	32'	32'	21'	31'
40'	70'	15'	4'	*	23'	37'	37'	23'	36'
46'	80'	18'	4'	*	26'	42'	42'	26'	41'
70'	100'	25'-30'	4'	*	38'	52'	52'	38'	51'

* STORM SEWER LOCATION TO MATCH PELICAN STYLE INLETS.
LOCATION VARIES WITH PIPE SIZE.

City of Newberg
PUBLIC WORKS ENGINEERING DIVISION
414 E. FIRST STREET NEWBERG, OREGON 97132
PHONE 503-537-1240 - FAX 503-537-1277

REVISIONS:
11-22-2010
2-25-2011

UTILITIES PLAN

SCALE: N.T.S.
DATE: May 2007
APPROVED BY: D. Danlclc
STANDARD DRAWING 103

EXHIBIT "B" TO
RESOLUTION NO. 2011-2936

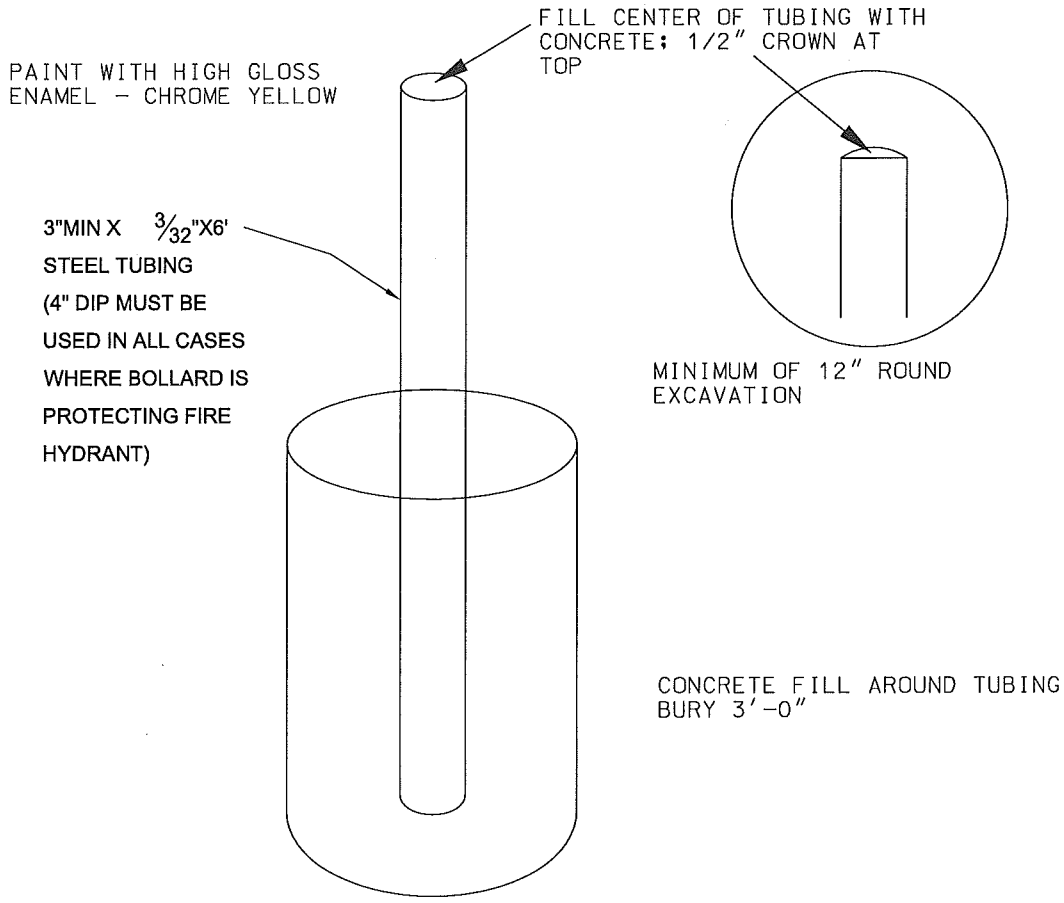

City of Newberg PUBLIC WORKS ENGINEERING DIVISION 414 E. FIRST STREET NEWBERG, OREGON 97132 PHONE 503-537-1240 - FAX 503-537-1277	REVISIONS:	BOLLARD	SCALE: N.T.S. DATE: JULY 2004 APPROVED BY: D. Danicic STANDARD DRAWING 104

EXHIBIT "B" TO
RESOLUTION NO. 2011-2936

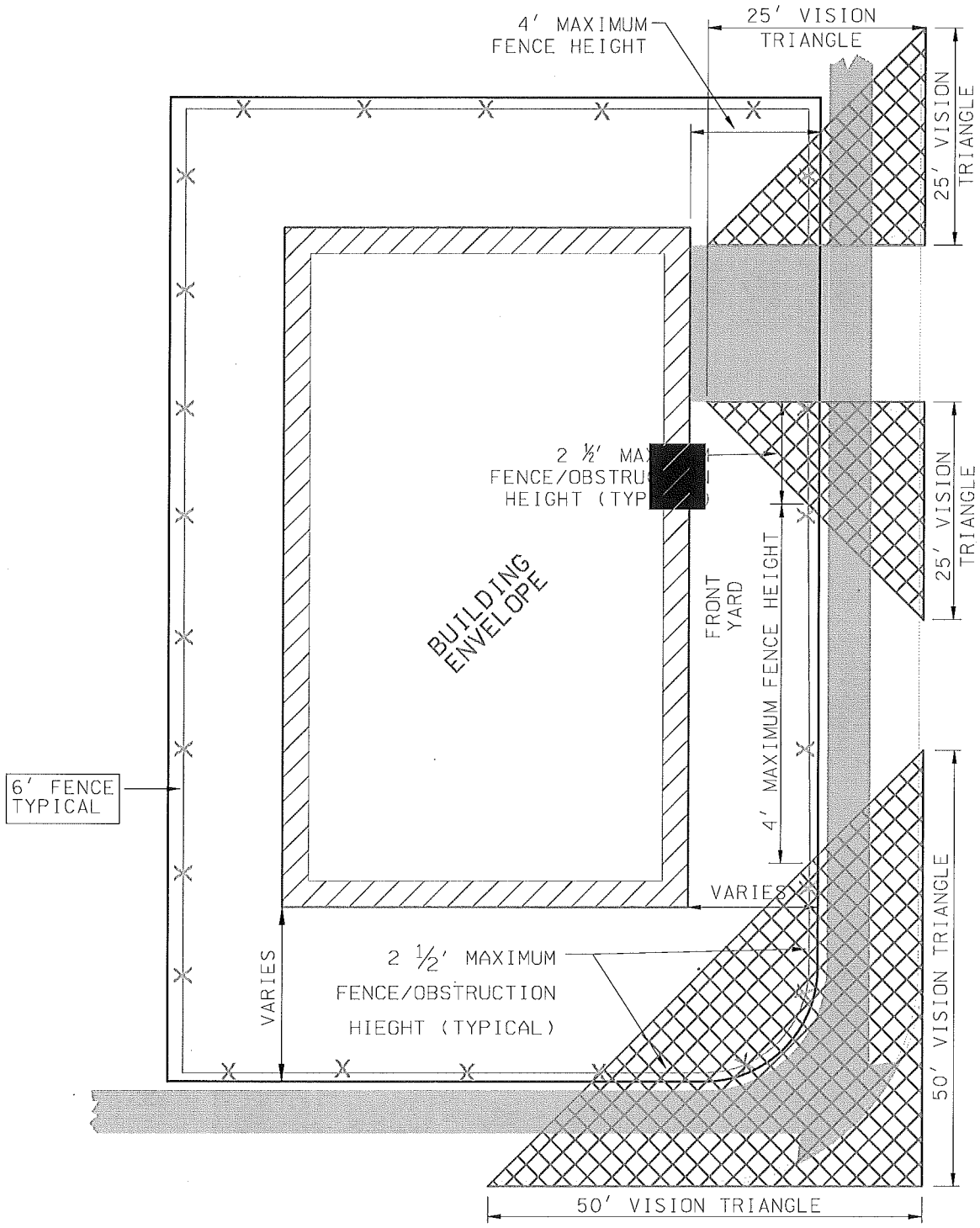

ALL FENCES AND/OR OBSTRUCTIONS WITHINVISION TRIANGLES SHALL BE A MAXIMUM OF 30" (2 ½')HIGH.

City of Newberg PUBLIC WORKS ENGINEERING DIVISION 414 E. FIRST STREET NEWBERG, OREGON 97132 PHONE 503-537-1240 - FAX 503-537-1277	REVISIONS:	RESIDENTIAL FENCES WALLS AND VISION CLEARANCE AREAS	SCALE: N.T.S. DATE: May 2007 APPROVED BY: D.Danicic STANDARD DRAWING 105

EXHIBIT "B" TO
RESOLUTION NO. 2011-2936

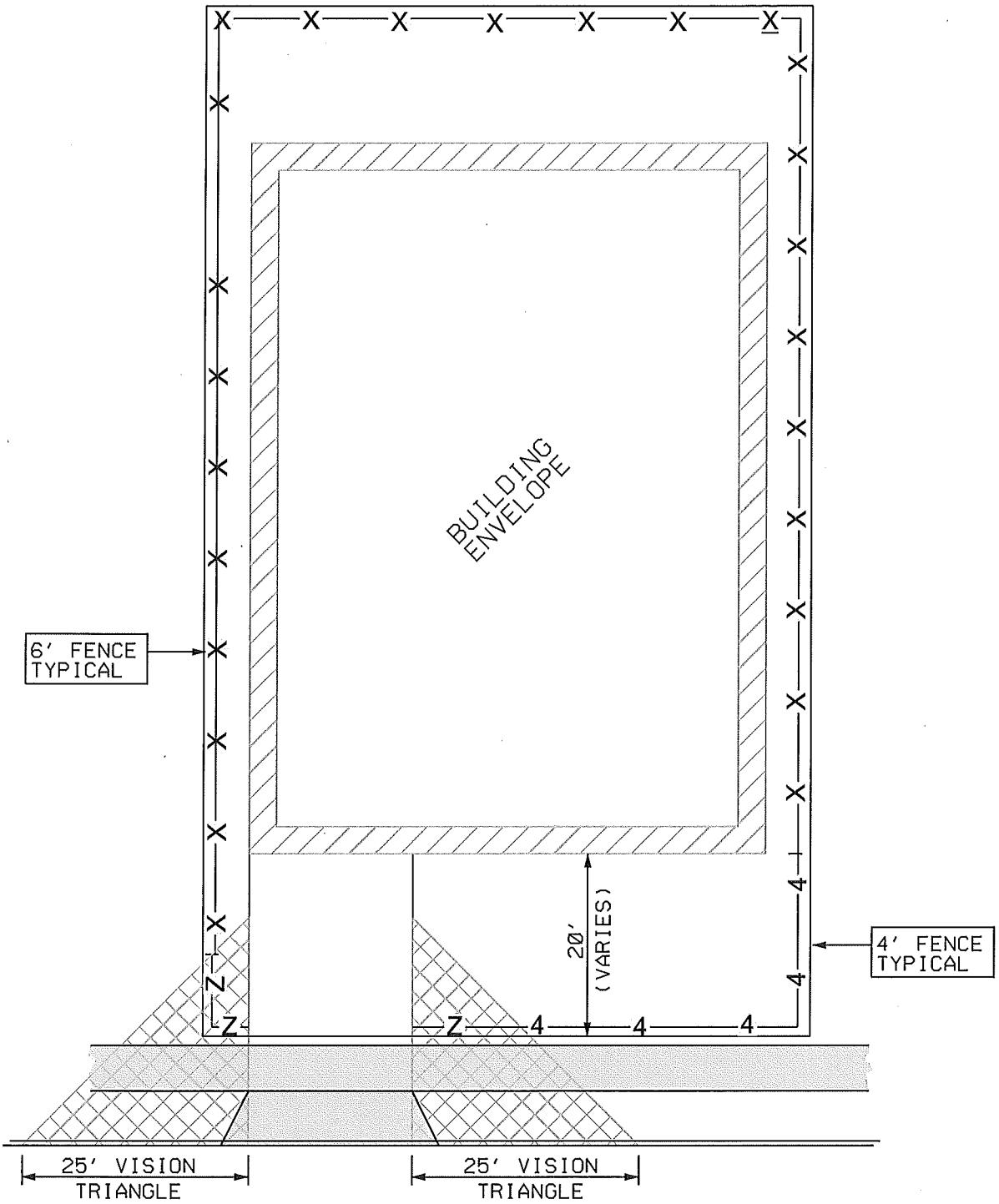

ALL FENCES WITHIN VISION TRIANGLES SHALL BE A MAXIMUM OF 30" (2½') IN HEIGHT

City of Newberg
PUBLIC WORKS ENGINEERING DIVISION
414 E. FIRST STREET NEWBERG, OREGON 97132

REVISIONS:

FENCES AND WALLS INTERIOR LOTS

SCALE:	N.T.S.
DATE:	May 2007
APPROVED BY:	D. Danicic
STANDARD DRAWING	106

EXHIBIT "B" TO
RESOLUTION NO. 2011-2936

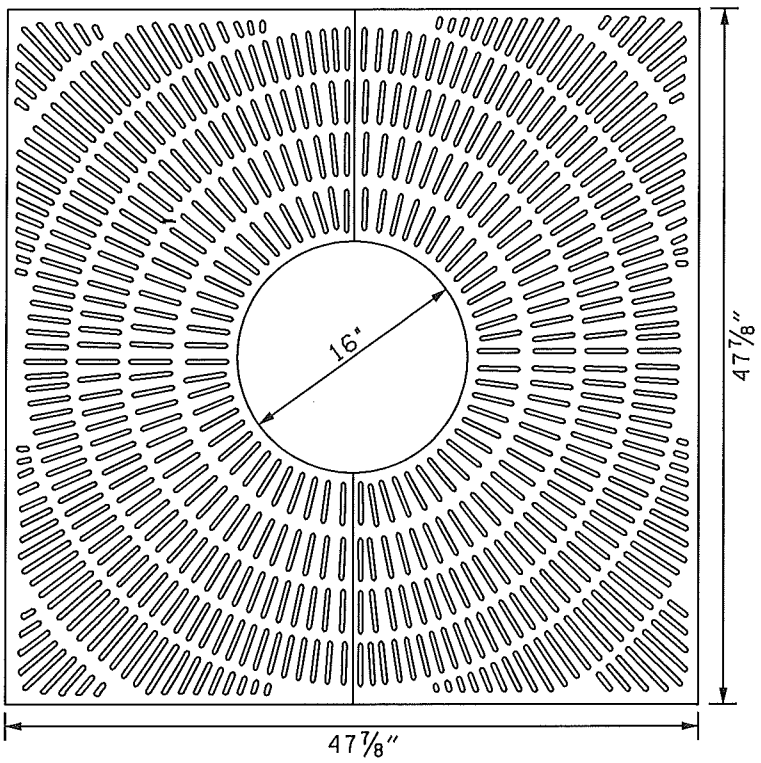

48" "STA" TREE GRATE:

- ADA APPROVED, TWO PEICE SET
- DUCTILE CAST IRON ASTM, A536, CL80-55-06
- APPROXIMATE WEIGHT 226 LBS. PER SET
- OLYMPIC FOUNDRY PART NO. 80-2190 (OR EQUIVALENT)

STYLE "CIP"
(NEW SUB-SLAB, SAND BED)

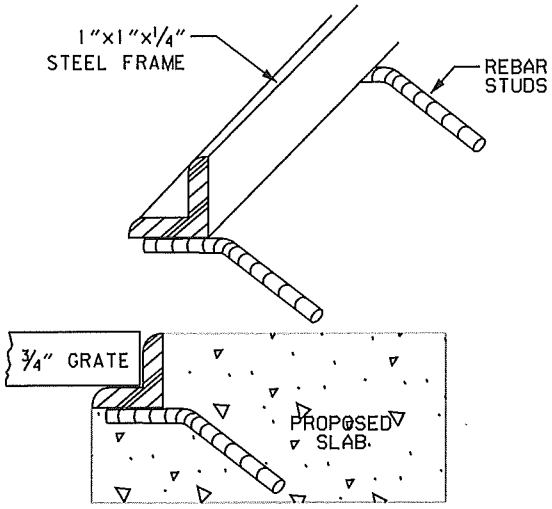

STYLE "RF"
(EXTG. SLAB)

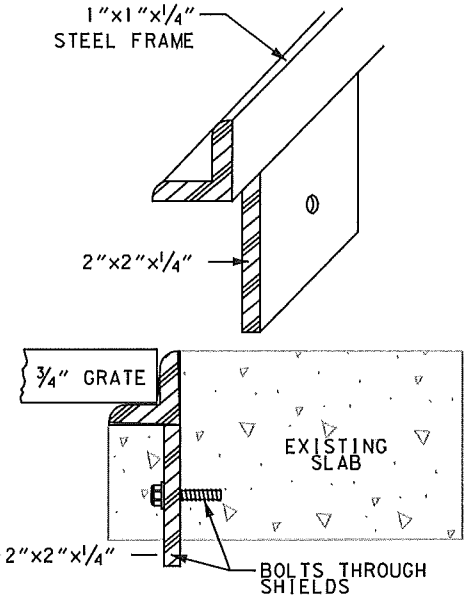

STYLE "AP"
(EXTG. SUB-SLAB, GROUT BED)

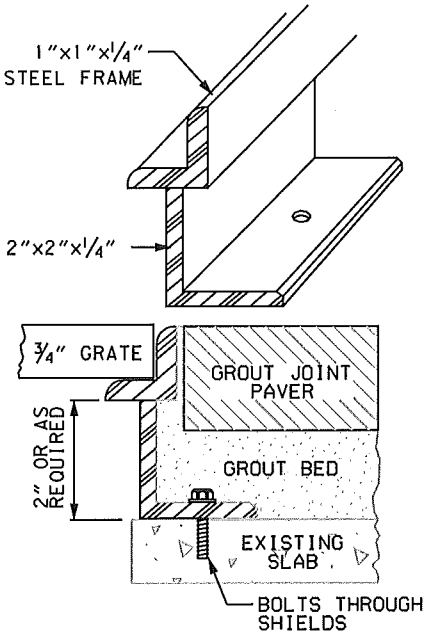

STYLE "CIP"
(NEW SUB-SLAB, SAND BED)

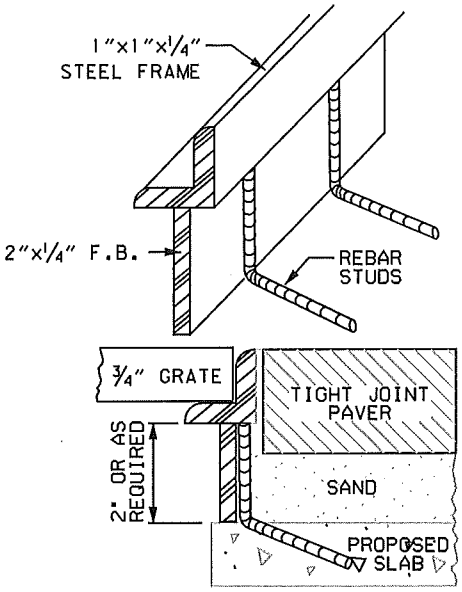

City of Newberg
PUBLIC WORKS ENGINEERING DIVISION
414 E. FIRST STREET NEWBERG, OREGON 97132

REVISIONS:

TREE GRATE AND FRAME

SCALE:	N.T.S.
DATE:	May 2007
APPROVED BY:	D. Danicic
STANDARD DRAWING	107

EXHIBIT "B" TO
RESOLUTION NO. 2011-2936

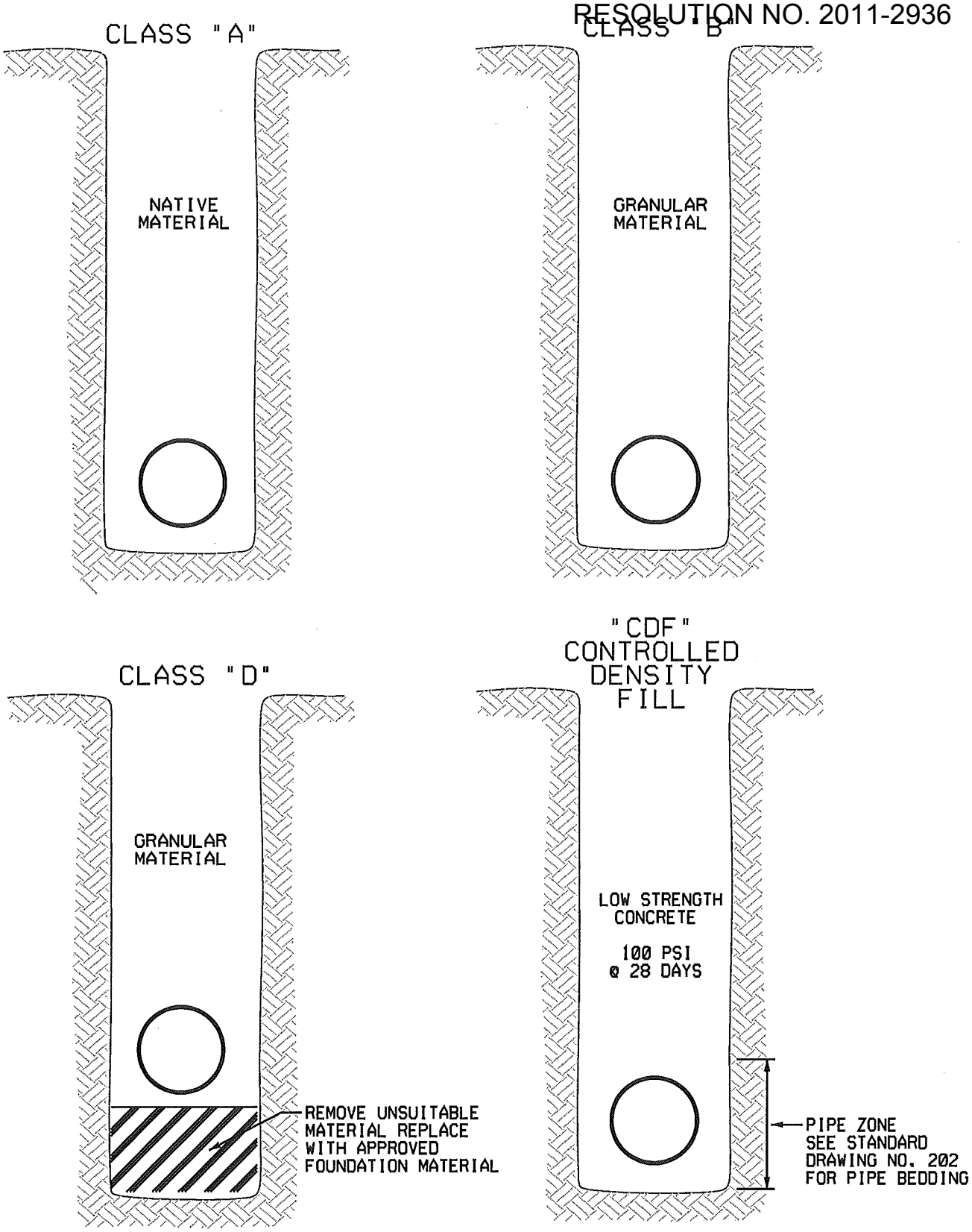

NOTES

1. COMPACT BACKFILL TO NOT LESS THAN 95% RELATIVE DENSITY.

2. INITIAL COMPACTION OF BACKFILL OVER P.V.C. PIPE, TO 3 FEET OVER TOP OF PIPE, SHALL BE 85% RELATIVE DENSITY.

City of Newberg
PUBLIC WORKS ENGINEERING DIVISION
414 E. FIRST STREET NEWBERG, OREGON 97132

REVISIONS:

TRENCH BACKFILL

SCALE:	N.T.S.
DATE:	May 2007
APPROVED BY:	D. Danicic
STANDARD DRAWING	201

EXHIBIT "B" TO
RESOLUTION NO. 2011-2936

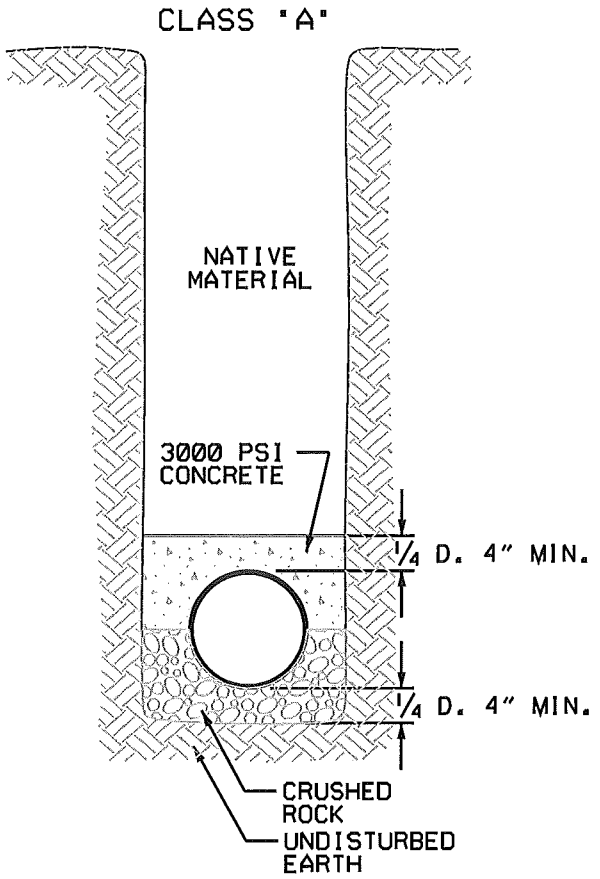

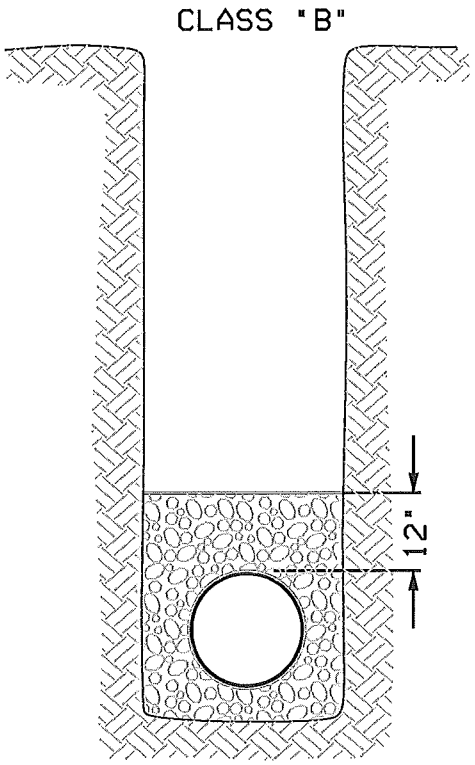

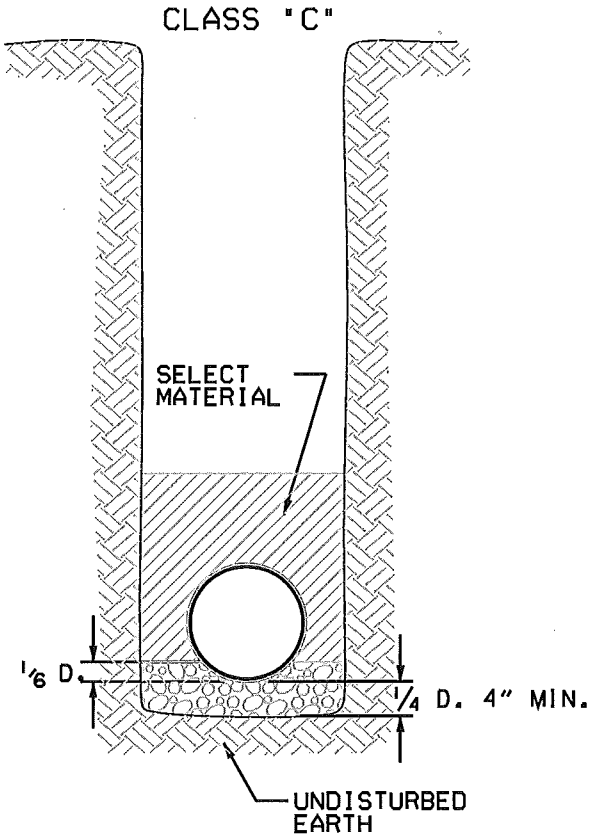

City of Newberg
PUBLIC WORKS ENGINEERING DIVISION
414 E. FIRST STREET NEWBERG, OREGON 97132

REVISIONS:

PIPE BEDDING

SCALE:	N.T.S.
DATE:	May 2007
APPROVED BY:	D. Danicic
STANDARD DRAWING	202

EXHIBIT "B" TO
RESOLUTION NO. 2011-2936

NOTE:
LAY PIPE THROUGH MANHOLE FOR CHANNEL IF THE SLOPE IN AND OUT OF THE MANHOLE ARE THE SAME.

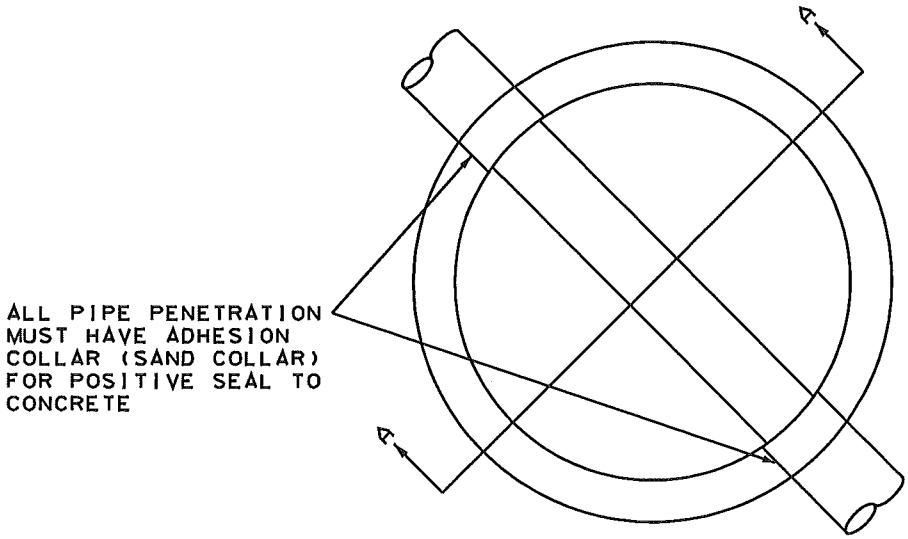

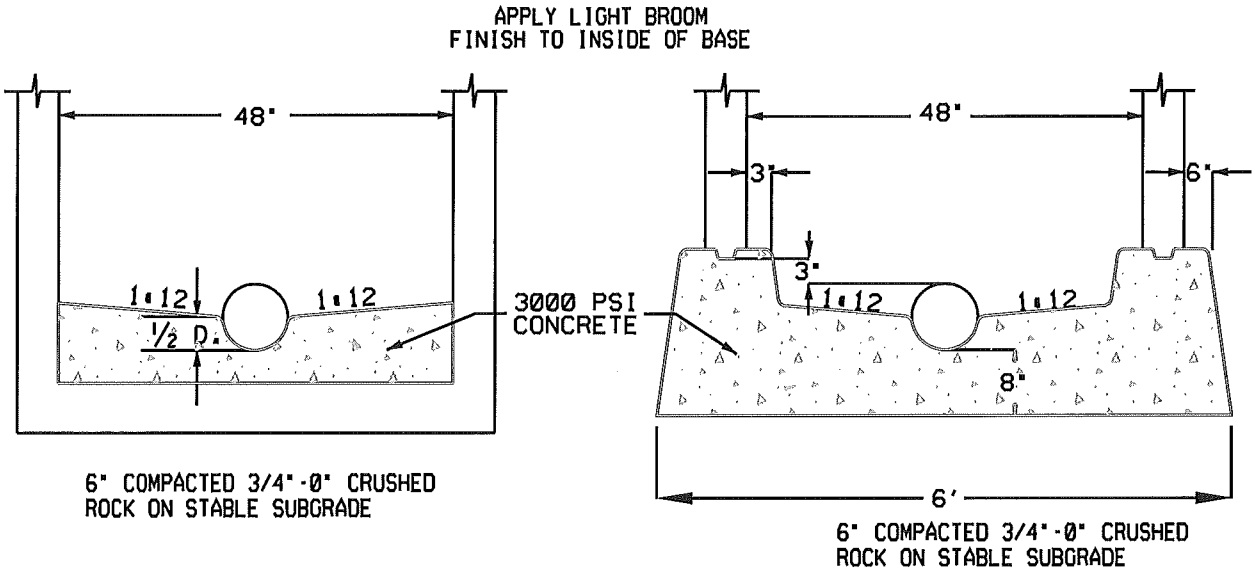

PRECAST BASE

POURED IN PLACE BASE

City of Newberg
PUBLIC WORKS ENGINEERING DIVISION
414 E. FIRST STREET NEWBERG, OREGON 97132

REVISIONS:

MANHOLE BASE

SCALE:	N.T.S.
DATE:	May 2007
APPROVED BY:	D. Danicic
STANDARD DRAWING	203

EXHIBIT "B" TO
RESOLUTION NO. 2011-2936

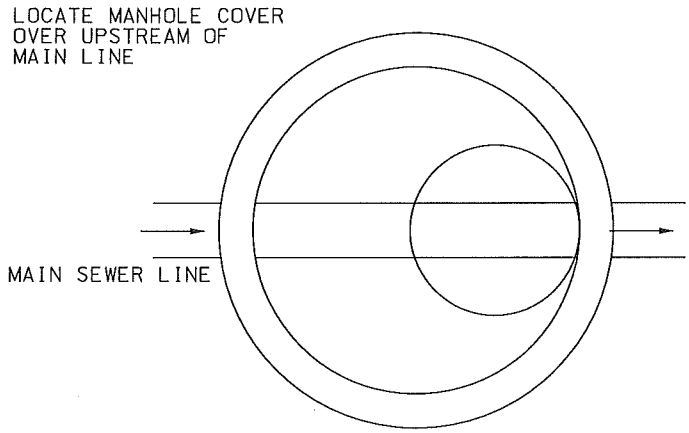

NOTES

1. STANDARD 48" MANHOLE TO BE USED FOR PIPES 24" AND LESS.
2. PRECAST CONCRETE STRUCTURES SHALL HAVE STRENGTH OF 4000 PSI.
3. STANDARD MANHOLE DEPTH = 8' TOP OF FRAME TO INVERT.
4. LATERAL LINES TO MATCH TOP OF INLET PIPE AT MANHOLE.
5. ALL INTERIOR JOINTS AND CONNECTIONS SHALL BE WATER TIGHT, AND GROUTED WITH NON-SHRINK GROUT.
6. ALL MANHOLES SHALL BE VACUUM TESTED PRIOR TO ACCEPTANCE.
7. **IF END OF LINE MANHOLE, STEP SHALL BE LOCATED ON DOWNSTREAM SIDE AND CHANNEL SHALL BE CONSRUCTED FULL WIDTH OF INTERIOR.**

USE OF KEY-LOC TYPE MANHOLE SECTIONS REQUIRES SEALING OF EXTERIOR JOINTS WITH "RAPID SEAL" OR INTERIOR COATING WITH "RAVIN COATING"

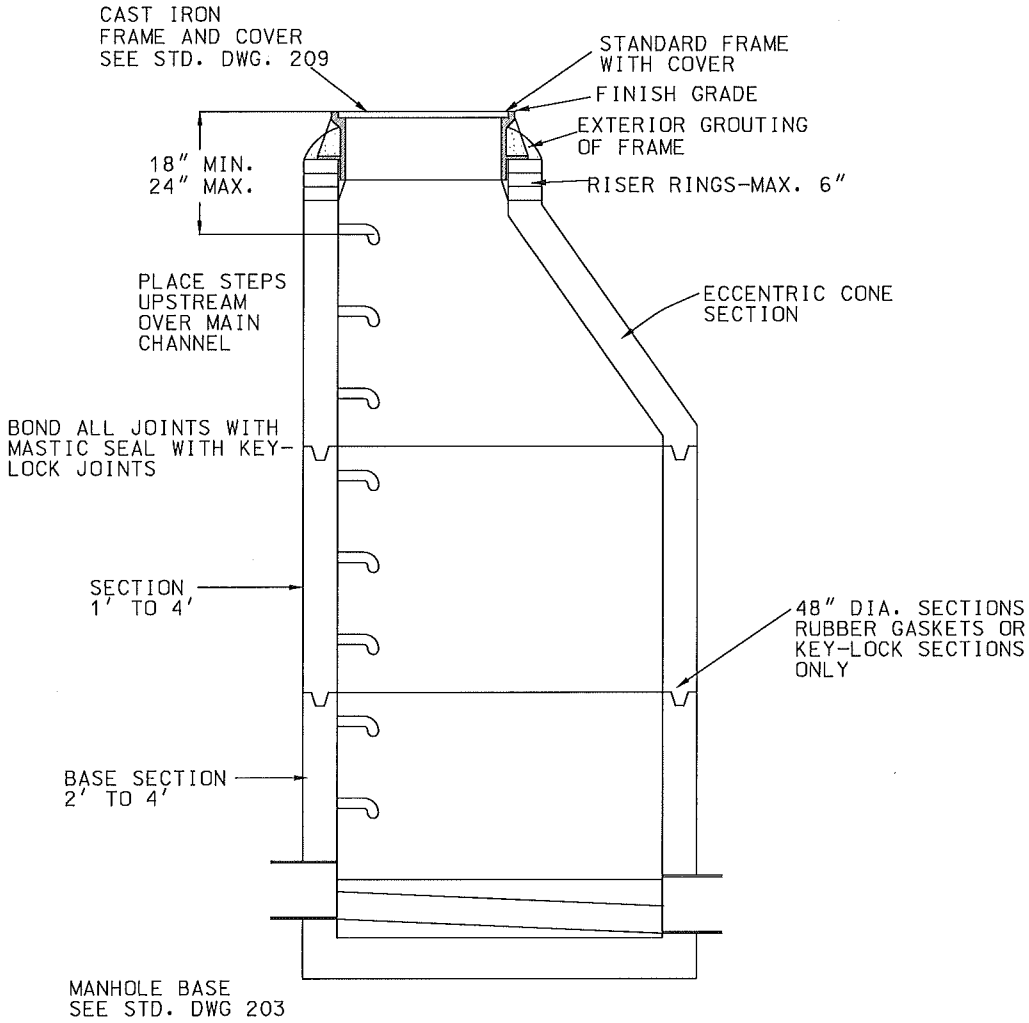

City of Newberg PUBLIC WORKS ENGINEERING DIVISION 414 E. FIRST STREET NEWBERG, OREGON 97132 PHONE 503-537-1240 - FAX 503-537-1277	REVISIONS: 12/28/07	48" STANDARD MANHOLE	SCALE: N.T.S. DATE: May 2007 APPROVED BY: D. Danicic STANDARD DRAWING 204

EXHIBIT "B" TO
RESOLUTION NO. 2011-2936

NOTES

1. STANDARD MANHOLE TO BE USED FOR PIPES 18" AND LESS.
2. PRECAST CONCRETE STRUCTURES SHALL HAVE STRENGTH OF 4000 PSI.
3. STANDARD MANHOLE DEPTH = 8' FROM TOP OF FRAME TO INVERT.
4. LATERAL LINES TO MATCH TOP OF INLET PIPE AT MANHOLE.
5. ALL INTERIOR JOINTS AND CONNECTIONS SHALL BE WATER TIGHT, AND GROUTED WITH NON-SHRINK GROUT.
6. ALL MANHOLES SHALL BE VACUUM TESTED PRIOR TO ACCEPTANCE.
7. **IF END OF LINE MANHOLE, STEPS SHALL BE LOCATED ON DOWNSTREAM SIDE AND CHANNEL SHALL BE CONSTRUCTED FULL WIDTH OF INTERIOR.**

USE OF KEY-LOC TYPE MANHOLE SECTIONS REQUIRES SEALING OF EXTERIOR JOINTS WITH "RAPID SEAL" OR INTERIOR COATING WITH "RAVIN COATING"

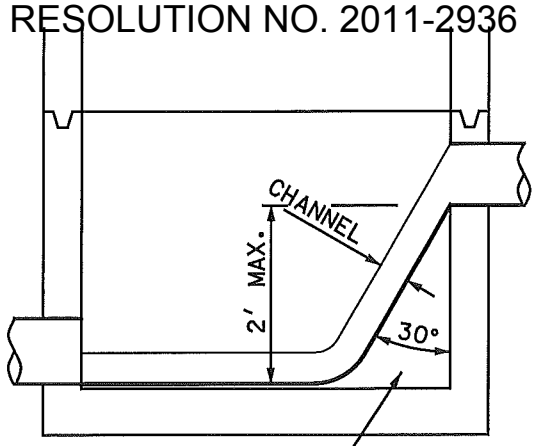

FORM CHANNEL AND SLIDE WITH GROUT. SMOOTH SURFACE FINISH SIMILAR TO CONCRETE PIPE.

BEAVER SLIDE

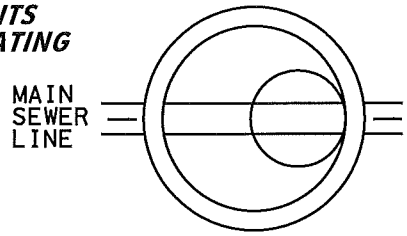

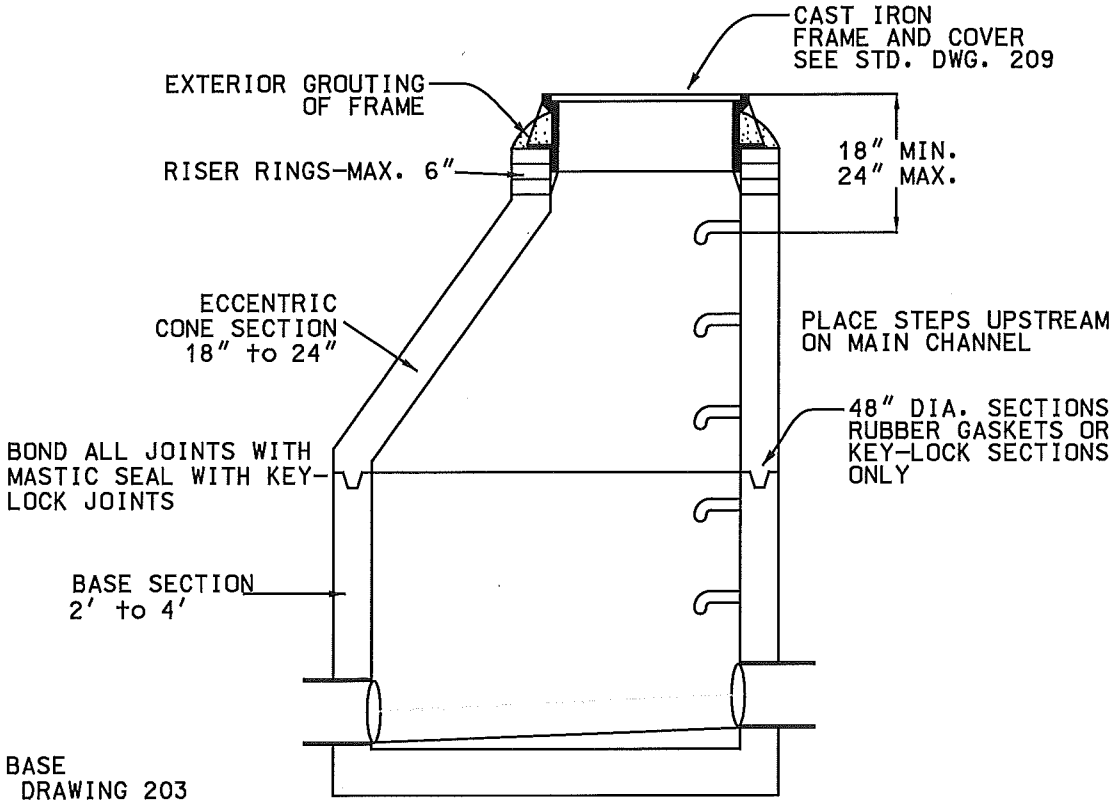

MANHOLE BASE
SEE STD. DRAWING 203

City of Newberg
PUBLIC WORKS ENGINEERING DIVISION
414 E. FIRST STREET NEWBERG, OREGON 97132
PHONE 503-537-1240 - FAX 503-537-1277

REVISIONS:	SHALLOW MANHOLE	SCALE: N.T.S.
12/28/07		DATE: May 2007
		APPROVED BY: D. Danicic
		STANDARD DRAWING 205

EXHIBIT "B" TO
RESOLUTION NO. 2011-2936

NOTES

1. STANDARD MANHOLE TO BE USED FOR PIPES 24" AND LESS.
2. PRECAST CONCRETE STRUCTURES SHALL HAVE STRENGTH OF 4000 PSI.
3. STANDARD MANHOLE DEPTH - 8' TOP OF FRAME TO INVERT.
4. LATERAL LINES TO MATCH TOP OF INLET PIPE AT MANHOLE.
5. ALL INTERIOR JOINTS AND CONNECTIONS SHALL BE WATER TIGHT, AND GROUTED WITH NON-SHRINK GROUT.
6. ALL MANHOLES SHALL BE VACUUM TESTED PRIOR TO ACCEPTANCE.
7. BOND ALL MANHOLE SECTION GROOVES WITH MASTIC SEAL.
8. **IF END OF LINE MANHOLE, STEPS SHALL BE LOCATED ON DOWNSTREAM SIDE AND CHANNEL SHALL BE CONSTRUCTED FULL WIDTH OF INTERIOR.**

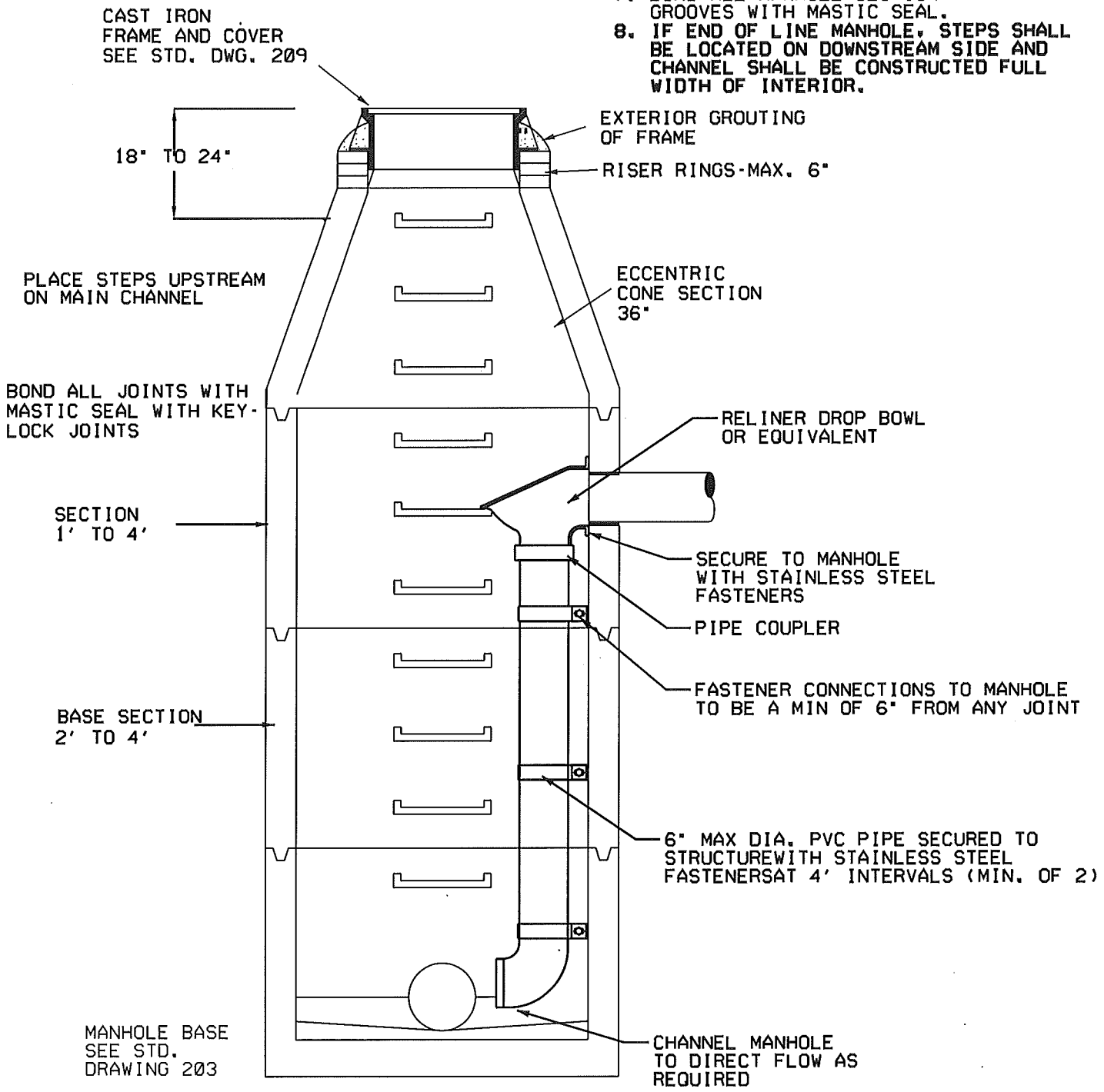

City of Newberg
PUBLIC WORKS ENGINEERING DIVISION
414 E. FIRST STREET NEWBERG, OREGON 97132

REVISIONS:

INSIDE DROP MANHOLE

SCALE:	N.T.S.
DATE:	May 2007
APPROVED BY:	D. Danicic
STANDARD DRAWING	206

EXHIBIT "B" TO
~~RESOLUTION NO. 2011-2936~~

NOTES

1. STANDARD MANHOLE TO BE USED FOR PIPES 24" AND LESS.
2. PRECAST CONCRETE STRUCTURES SHALL HAVE STRENGTH OF 4000 PSI.
3. STANDARD MANHOLE DEPTH = 8' TOP OF FRAME TO INVERT.
4. LATERAL LINES TO MATCH TOP OF INLET PIPE AT MANHOLE.
5. ALL INTERIOR JOINTS AND CONNECTIONS SHALL BE WATER TIGHT, AND GROUTED WITH NON-SHRINK GROUT.
6. ALL MANHOLES SHALL BE VACUUM TESTED PRIOR TO ACCEPTANCE.
7. BOND ALL MANHOLE SECTION GROOVES WITH MASTIC SEAL.
8. **IF END OF LINE MANHOLE, STEPS SHALL BE LOCATED ON DOWNSTREAM SIDE AND CAHNNEL SHALL BE CONSTRUCTED FULL WIDTH OF INTERIOR.**

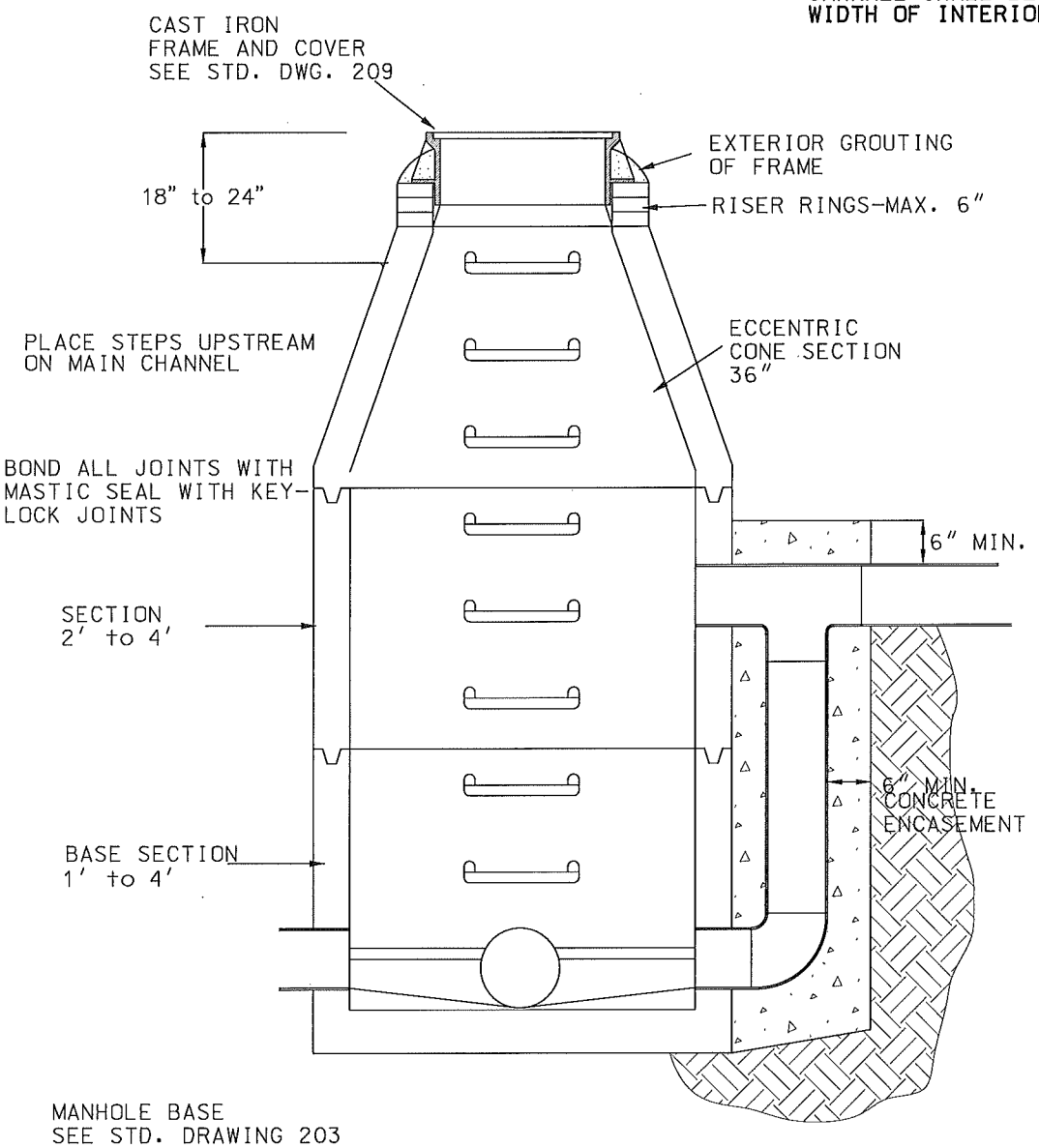

City of Newberg PUBLIC WORKS ENGINEERING DIVISION 414 E. FIRST STREET NEWBERG, OREGON 97132 PHONE 503-537-1240 - FAX 503-537-1277	REVISIONS:	OUTSIDE DROP MANHOLE	SCALE: DATE: APPROVED BY: STANDARD DRAWING 207

EXHIBIT "B" TO
RESOLUTION NO. 2011-2936

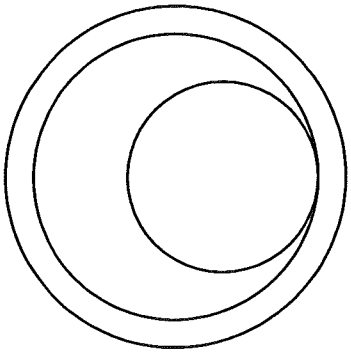

NOTES
1. ALL CONCRETE SHALL HAVE STRENGTH OF 3000 PSI AT 28 DAYS.
2. MANHOLE TO BE USED FOR PIPE SIZES 24" AND GREATER.

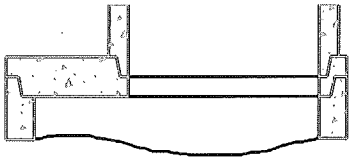

72" TO 48"
REDUCING SLAB

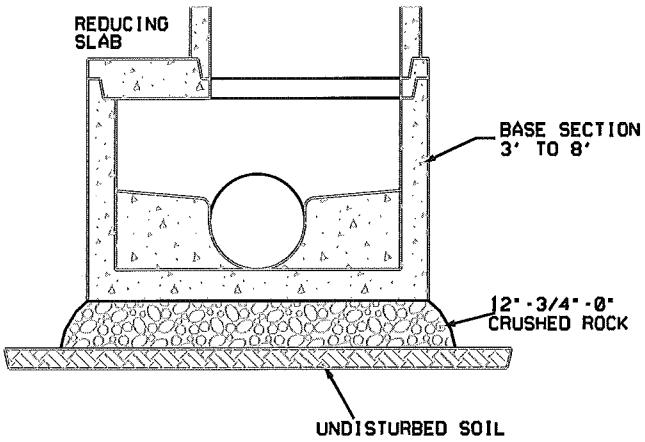

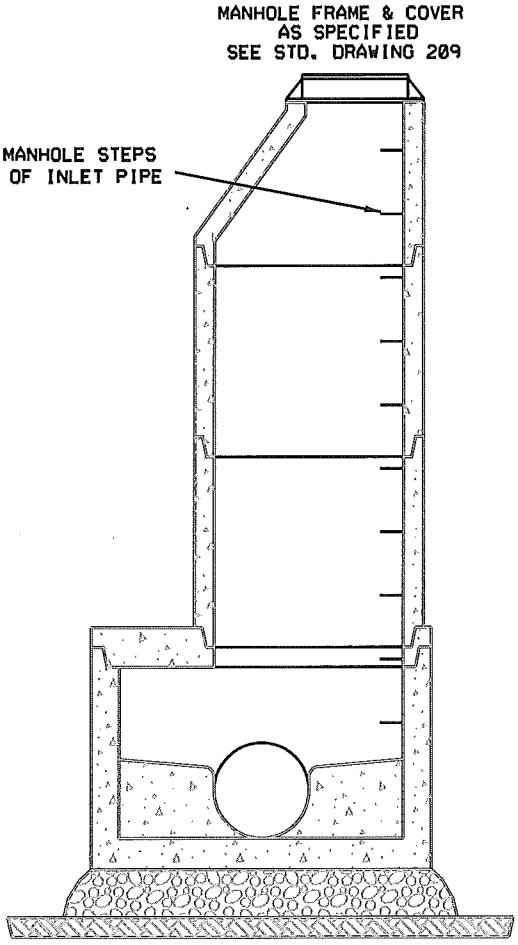

City of Newberg
PUBLIC WORKS ENGINEERING DIVISION
414 E. FIRST STREET NEWBERG, OREGON 97132

REVISIONS:

OFFSET MANHOLE

SCALE:	N.T.S.
DATE:	May 2007
APPROVED BY:	D. Danicic
STANDARD DRAWING	208

SANITARY

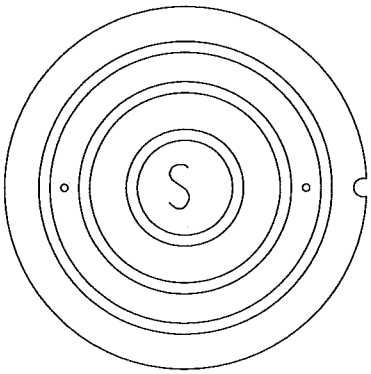

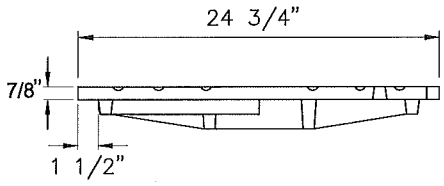

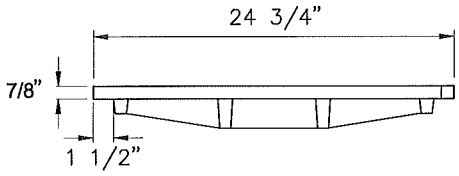

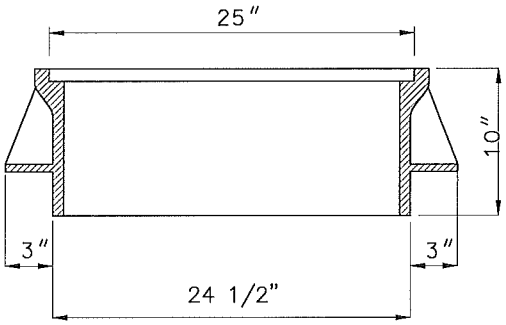

STANDARD FRAME

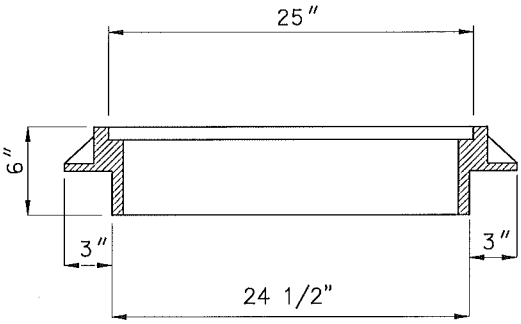

SUBURBAN FRAME

NOTES

1. USE SUBURBAN TYPE FRAME IN NON-TRAFFIC AREAS ONLY.
2. COVER AND FRAME SHALL BE CAST IRON, ASTM A-48 CLASS 30 AND MEET H-20 LOAD RATING.
3. COVER AND FRAME TO HAVE TRUE BEARING ALL AROUND.

City of Newberg
PUBLIC WORKS ENGINEERING DIVISION
414 E. FIRST STREET NEWBERG, OREGON 97132
PHONE 503-537-1240 - FAX 503-537-1277

REVISIONS:
Sept. 2010

WASTEWATER MANHOLE FRAME AND COVER

SCALE:	N.T.S.
DATE:	JULY 2004
APPROVED BY:	D. Danicic
STANDARD DRAWING	209

EXHIBIT "B" TO
RESOLUTION NO. 2011-2936

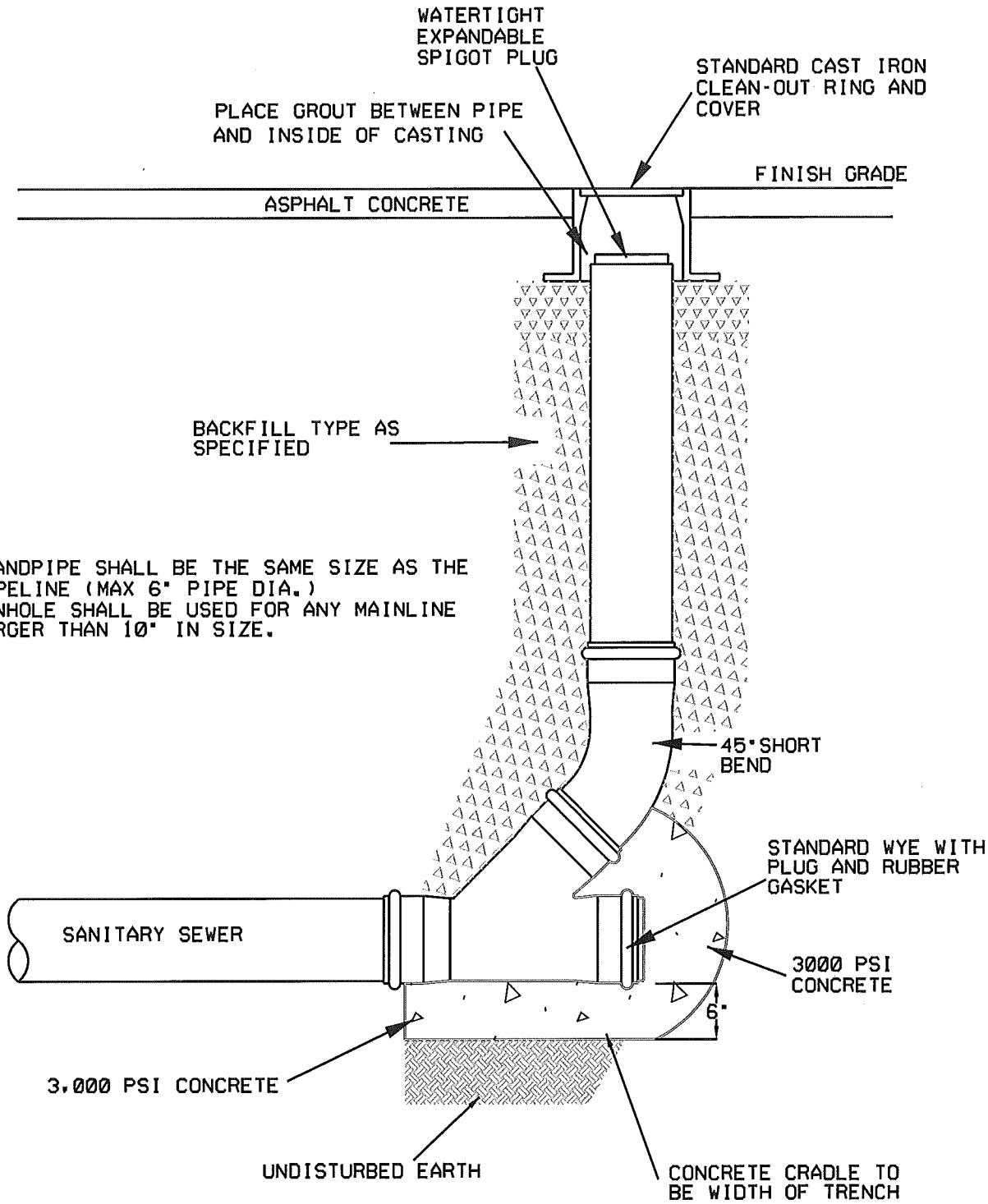

NOTES
1. STANDPIPE SHALL BE THE SAME SIZE AS THE PIPELINE (MAX 6" PIPE DIA.)
2. MANHOLE SHALL BE USED FOR ANY MAINLINE LARGER THAN 10" IN SIZE.

City of Newberg
PUBLIC WORKS ENGINEERING DIVISION
414 E. FIRST STREET NEWBERG, OREGON 97132

REVISIONS:

CLEAN OUT

SCALE:	N.T.S.
DATE:	May 2007
APPROVED BY:	D. Danicic
STANDARD DRAWING	210

EXHIBIT "B" TO
~~RESOLUTION NO. 2011-2936~~

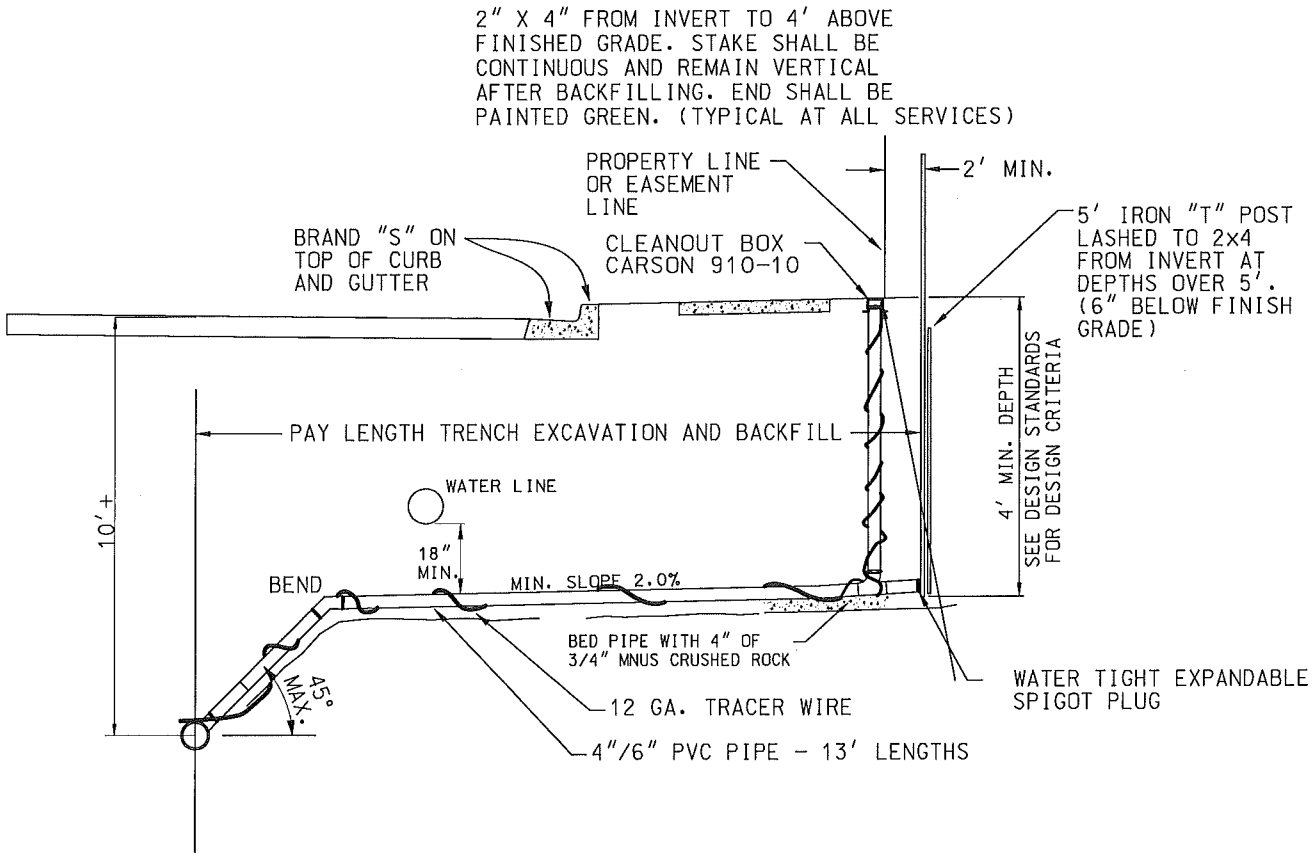

DEEP SEWER SERVICE

NOTES:

1. USES - SINGLE RESIDENTIAL SERVICE - 4" PIPE
   SPLIT RESIDENTIAL SERVICE WITH CLEAN OUT - 6" PIPE
   SPLIT RESIDENTIAL SERVICE WITH CLEAN OUT - 6" PIPE SEE STD. DWG 212
2. SCHEME FOR HOUSE SERVICE TO BE DETERMINED BY INSPECTOR IN FIELD IN CASE OF CONFLICT WITH PLANS.
3. SERVICE SHALL NOT BE BACKFILLED PRIOR TO INSPECTION.
4. MINIMUM SLOPE -2%.

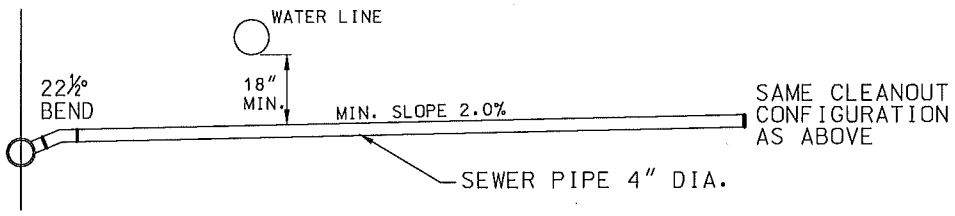

SHALLOW SEWER SERVICE

City of Newberg PUBLIC WORKS ENGINEERING DIVISION 414 E. FIRST STREET NEWBERG, OREGON 97132 PHONE 503-537-1240 - FAX 503-537-1277	REVISIONS: 07/29/08	SERVICE BRANCH	SCALE: N.T.S. DATE: JULY 2004 APPROVED BY: D. Danicic STANDARD DRAWING 211

EXHIBIT "B" TO
RESOLUTION NO. 2011-2936

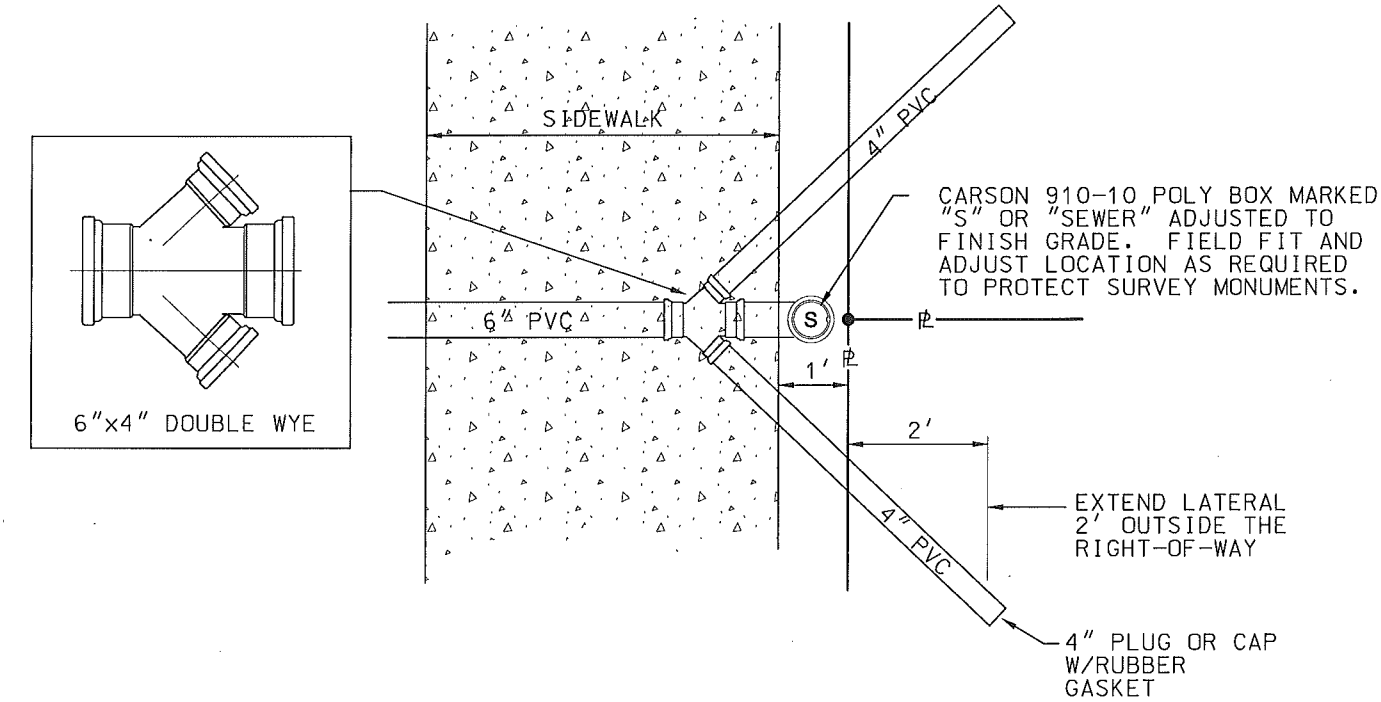

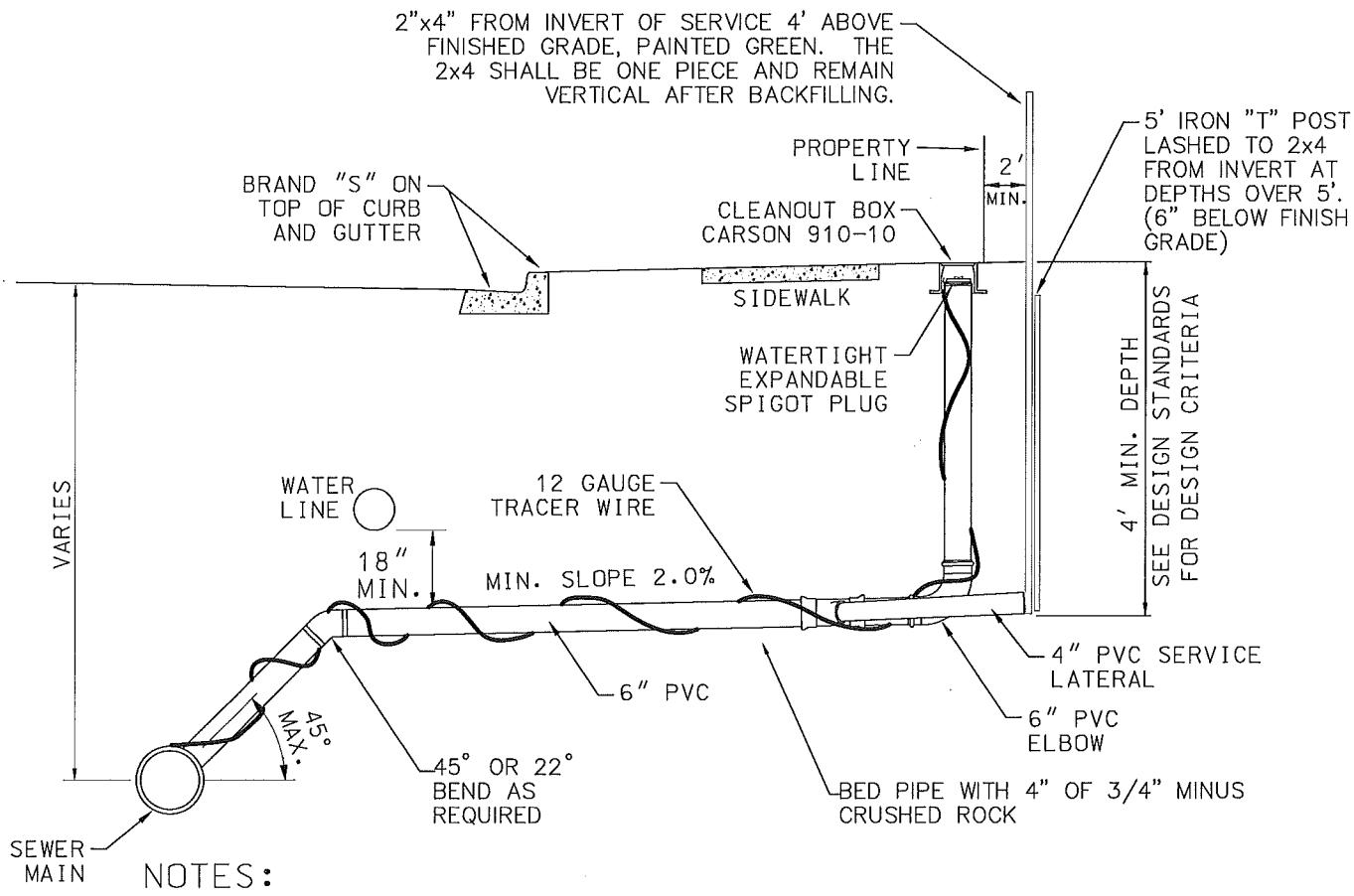

NOTES:

1. USES: SPLIT RESIDENTIAL SERVICE. SEE STD. DWG 210 FOR SINGLE SERVICE
2. SERVICE SHALL NOT BE BACKFILLED PRIOR TO INSPECTION.
3. MINIMUM PIPE SLOPE 2%.

City of Newberg PUBLIC WORKS ENGINEERING DIVISION 414 E. FIRST STREET NEWBERG, OREGON 97132 PHONE 503-537-1240 - FAX 503-537-1277	REVISIONS: 07/29/08	DOUBLE WYE SERVICE BRANCH	SCALE: N.T.S. DATE: JULY 2004 APPROVED BY: D. Danicic STANDARD DRAWING 212

FOR USE IN PRIVATE AREAS ONLY

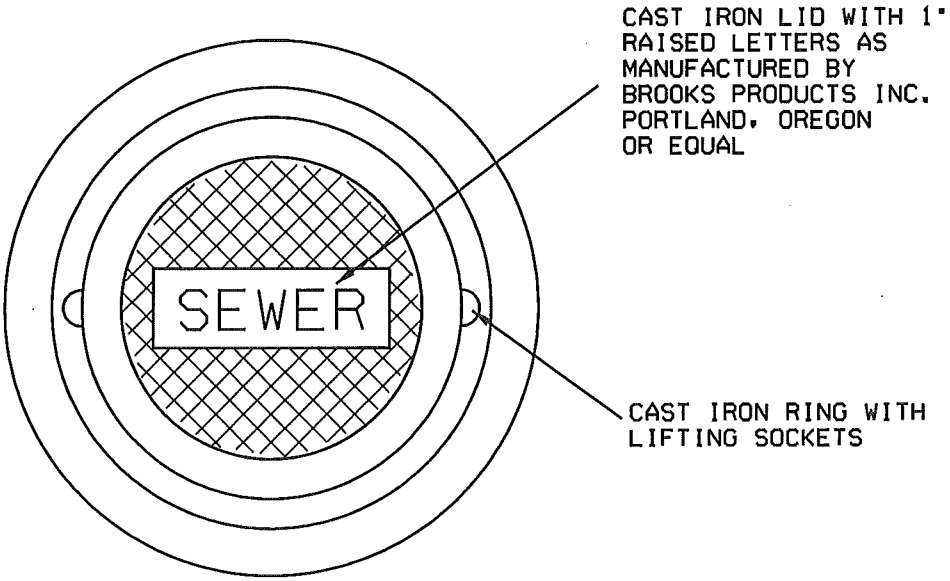

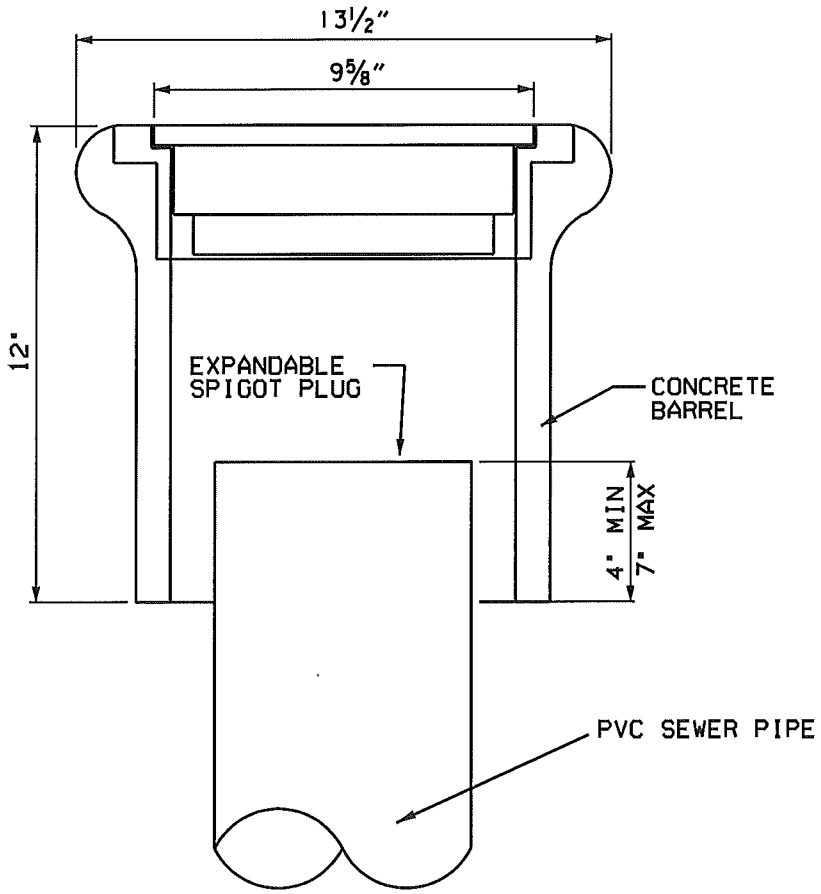

City of Newberg
PUBLIC WORKS ENGINEERING DIVISION
414 E. FIRST STREET NEWBERG, OREGON 97132

REVISIONS:

TRAFFIC BOX
PRIVATE AREAS ONLY

SCALE:	N.T.S.
DATE:	May 2007
APPROVED BY:	D. Danicic
STANDARD DRAWING	213

EXHIBIT "B" TO
RESOLUTION NO. 2011-2936

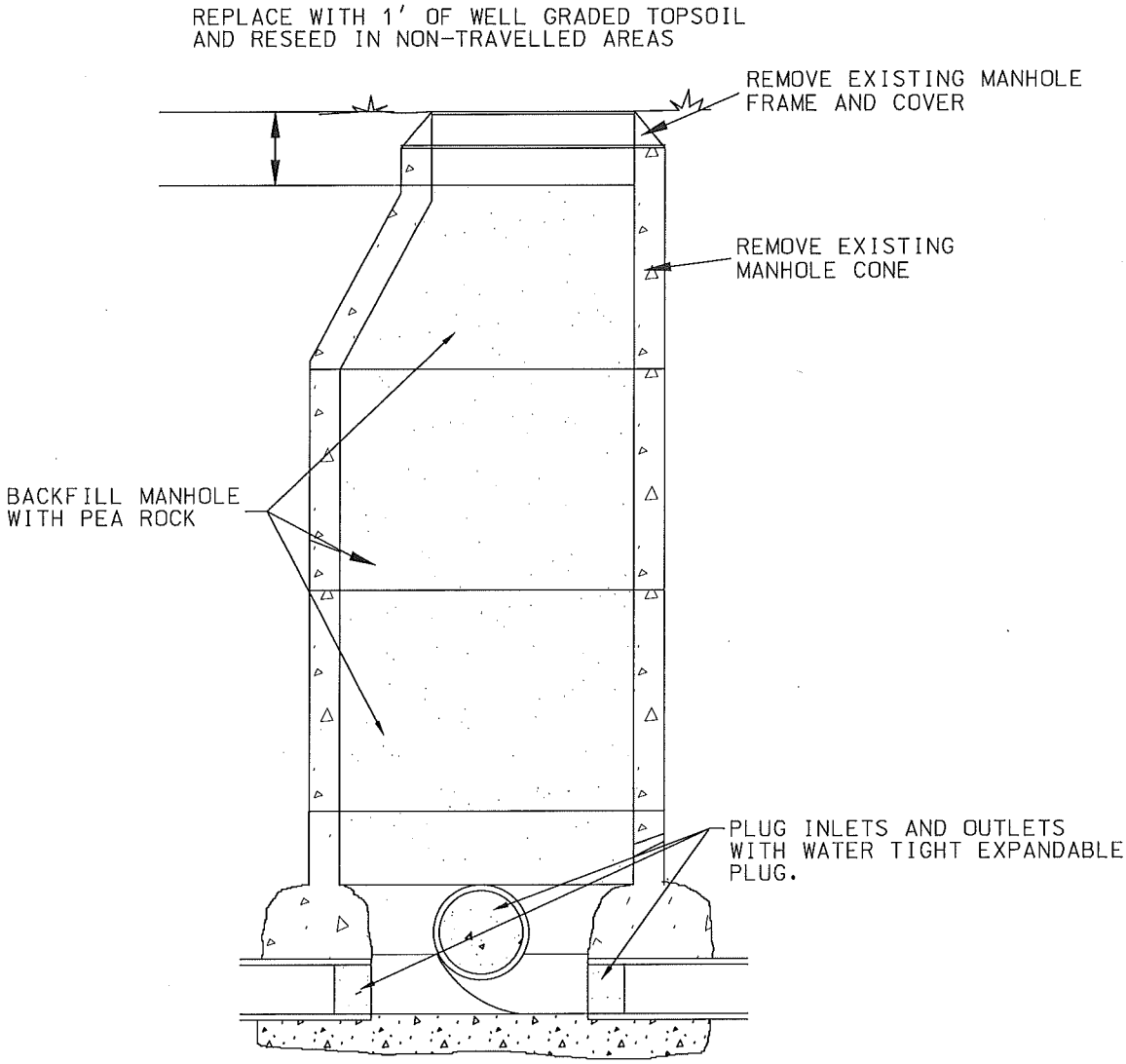

NOTES:
1. PRIOR TO ABANDONMENT OF MANHOLE VERIFY THAT ANY AND ALL SEWER SERVICES HAVE BEEN CONNECTED TO NEW SEWER MAIN.

City of Newberg
PUBLIC WORKS ENGINEERING DIVISION
414 E. FIRST STREET NEWBERG, OREGON 97132
PHONE 503-537-1240 - FAX 503-537-1277

REVISIONS:

MANHOLE ABANDONMENT

SCALE:	N.T.S.
DATE:	May 2007
APPROVED BY:	D. Danicic
STANDARD DRAWING	214

EXHIBIT "B" TO
RESOLUTION NO. 2011-2936

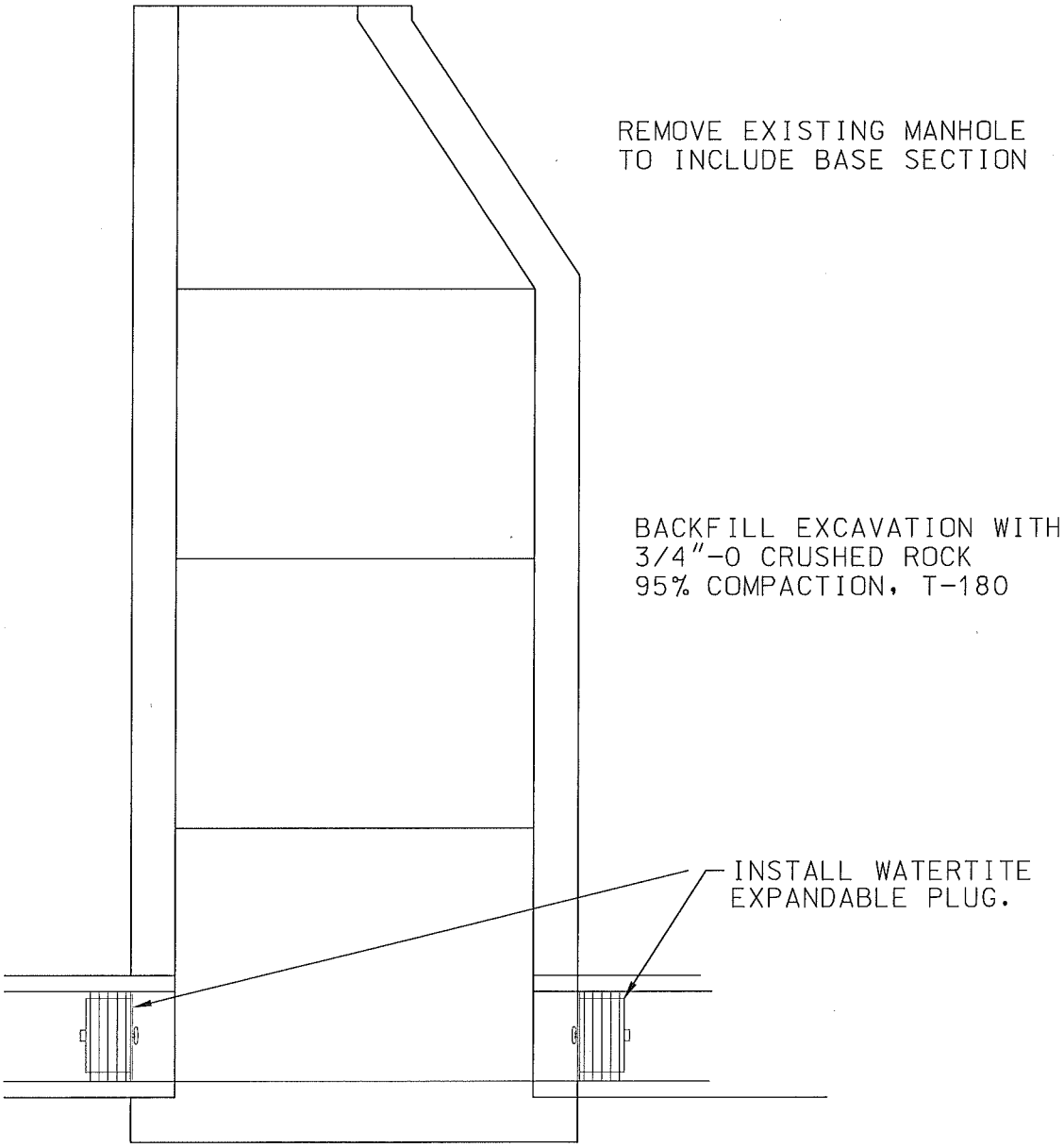

City of Newberg PUBLIC WORKS ENGINEERING DIVISION 414 E. FIRST STREET NEWBERG, OREGON 97132 PHONE 503-537-1240 - FAX 503-537-1277	REVISIONS: Nov. 2010	MANHOLE REMOVAL	SCALE: N.T.S. DATE: May 2007 APPROVED BY: D. Danicic STANDARD DRAWING 215

EXHIBIT "B" TO
RESOLUTION NO. 2011-2936

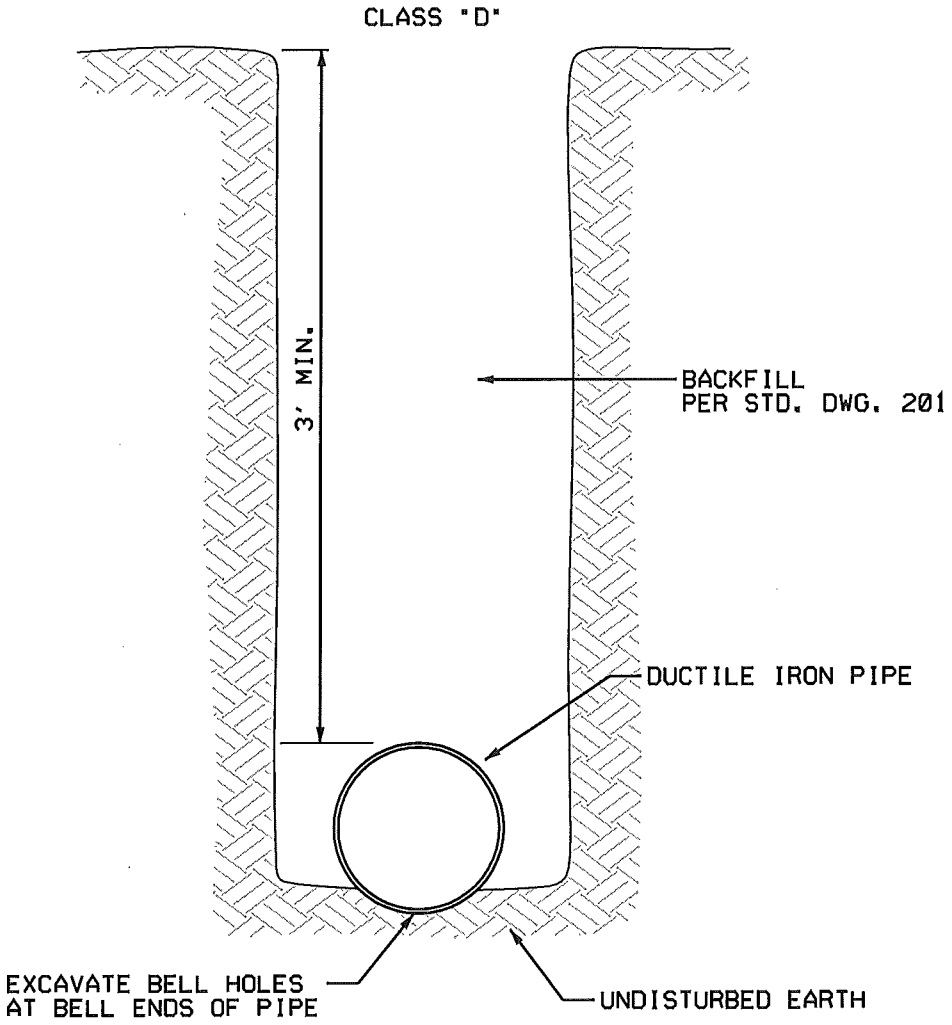

City of Newberg
PUBLIC WORKS ENGINEERING DIVISION
414 E. FIRST STREET NEWBERG, OREGON 97132

REVISIONS:

WATER PIPE BEDDING

SCALE:	N.T.S.
DATE:	May 2007
APPROVED BY:	D. Danicic
STANDARD DRAWING	301

EXHIBIT "B" TO
RESOLUTION NO. 2011-2936

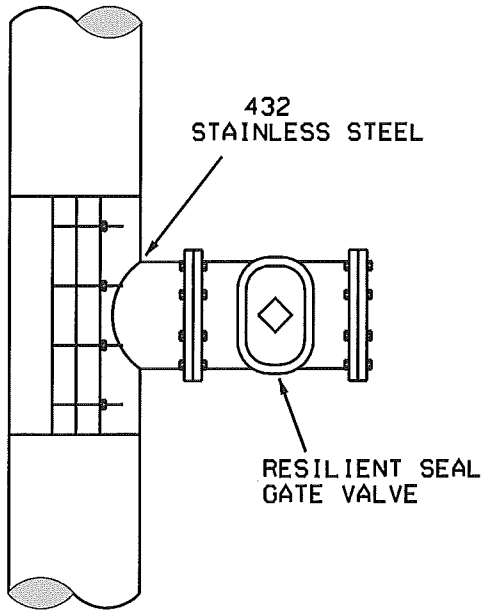

FULL STAINLESS STEEL TAPPING SLEEVE

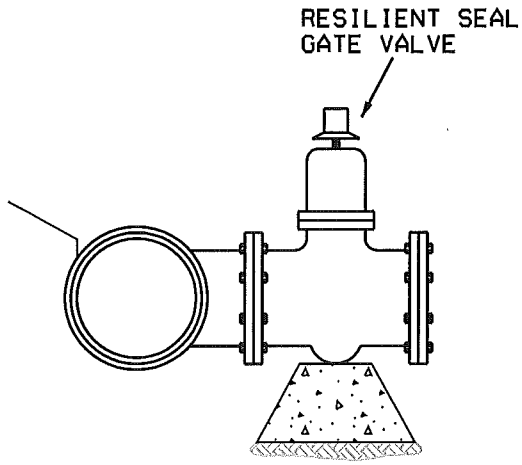

NOTES

1. WATER MAIN SHALL BE CLEANED BEFORE ATTACHING SLEEVE.
2. SLEEVE AND VALVE SHALL BE PRESSURE TESTED BEFORE MAKING TAP
3. PRESSURE TEST AND TAP SHALL BE MADE IN THE PRESENCE OF AN AUTHORIZED CITY REPRESENTATIVE BY A CONTRACTOR APPROVED BY THE ENGINEER.
4. 3/4"-0" CRUSHED ROCK SHALL BE PLACED AND COMPACTED TO 95% OF MAXIMUM DENSITY AS DETERMINED BY AASHTO T-180.
5. TAP SHALL BE MADE NO CLOSER THAN 18" FROM THE NEAREST JOINT.
6. SLEEVE AND VALVE SHALL BE WRAPPED AND SEALED WITH 8 MIL PLASTIC.
7. FLUSH ALL METAL SHAVINGS FROM THE TAPPING PROCESS.
8. STAINLESS STEEL TAPPING SLEEVE ON DUCTILE IRON PIPE
9. COUPON MUST BE RETAINED BY TAPPING BIT AND REMOVED FROM WATER MAIN.

City of Newberg PUBLIC WORKS ENGINEERING DIVISION 414 E. FIRST STREET NEWBERG, OREGON 97132	REVISIONS:	WATER TAPPING SLEEVES	SCALE: N.T.S. DATE: May 2007 APPROVED BY: D. Danicic STANDARD DRAWING 302

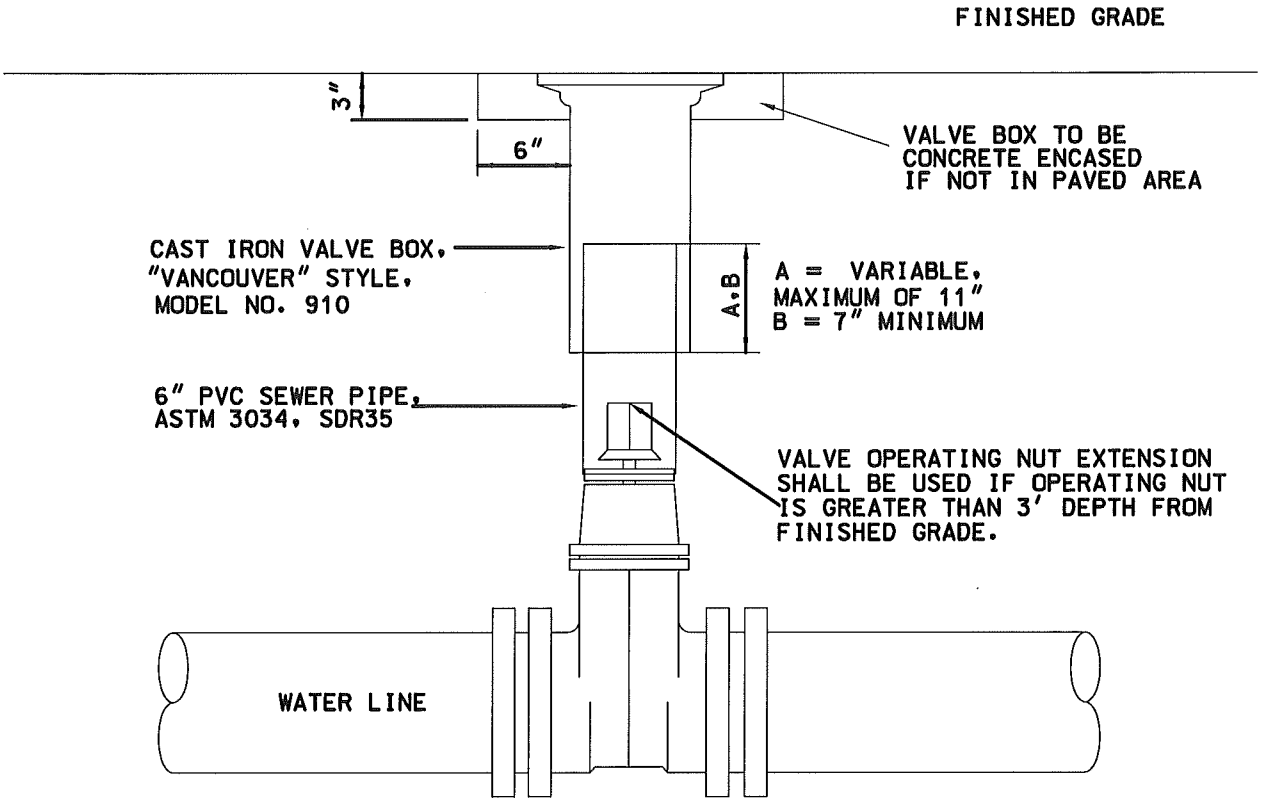

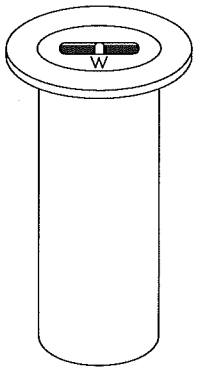

"VANCOUVER"
18" TALL VALVE BOX

NOTES:

1. VALVE BOXES SHALL BE CENTERED DIRECTLY OVER THE NUT IN A VERTICAL POSITION.
2. VALVE BOX SHALL BE ADJUSTED TO MEET FINISHED GRADE.
3. PVC SHALL BE ONE CONTINUOUS PIECE - NO BELLS OR COUPLERS.
4. SEE STANDARD DRAWING NO. 304 VALVE BOX AND COVER.

City of Newberg
PUBLIC WORKS ENGINEERING DIVISION
414 E. FIRST STREET NEWBERG, OREGON 97132
PHONE 503-537-1240 - FAX 503-537-1277

REVISIONS:	VALVE BOX ASSEMBLY	SCALE: N.T.S.
11-26-2010		DATE: JULY 2004
		APPROVED BY: D. Danicic
		STANDARD DRAWING 303

EXHIBIT "B" TO
RESOLUTION NO. 2011-2936

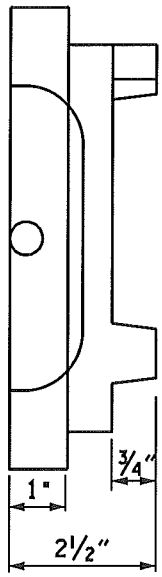

TOP VIEW

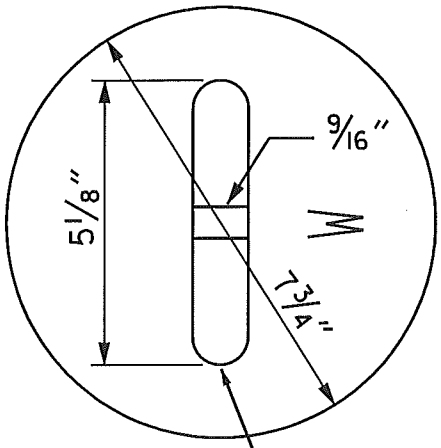

BOTTOM VIEW

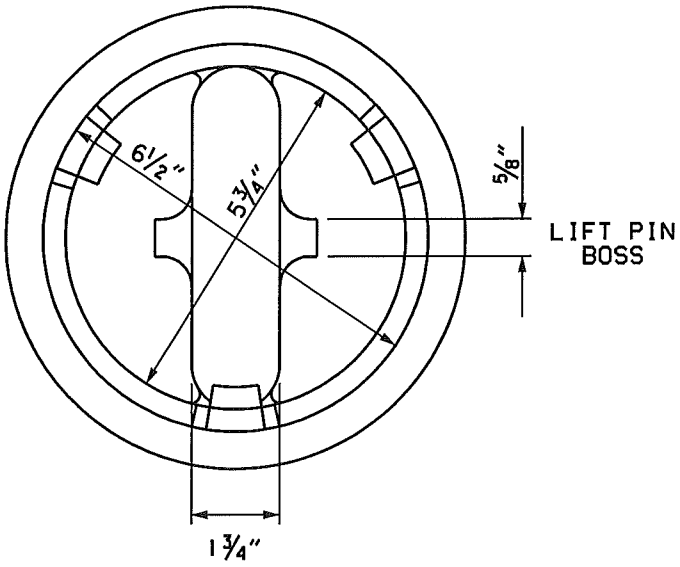

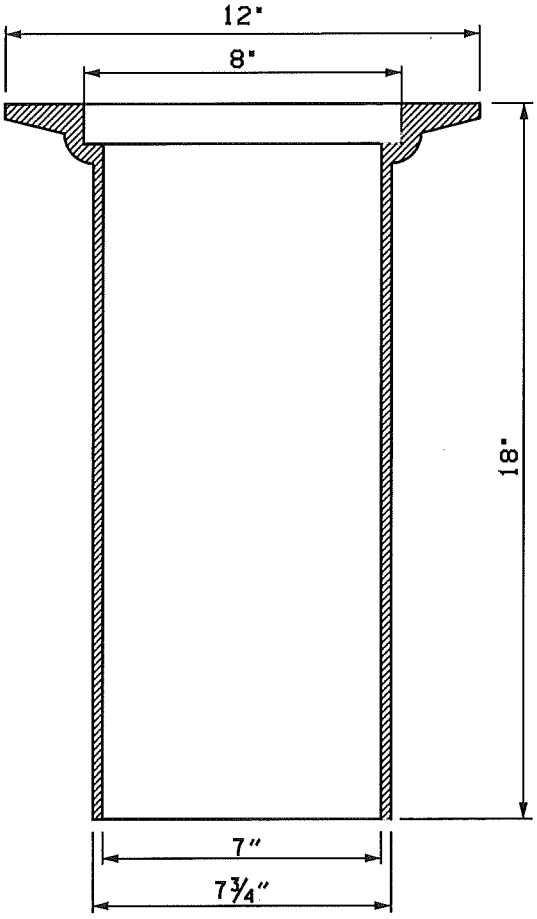

MATERIALS:
CAST IRON PER ASTM A48 CL30

City of Newberg
PUBLIC WORKS ENGINEERING DIVISION
414 E. FIRST STREET NEWBERG, OREGON 97132

REVISIONS:

VALVE BOX
AND COVER

SCALE:	N.T.S.
DATE:	May 2007
APPROVED BY:	D. Danicic
STANDARD DRAWING	304

EXHIBIT "B" TO
RESOLUTION NO. 2011-2936

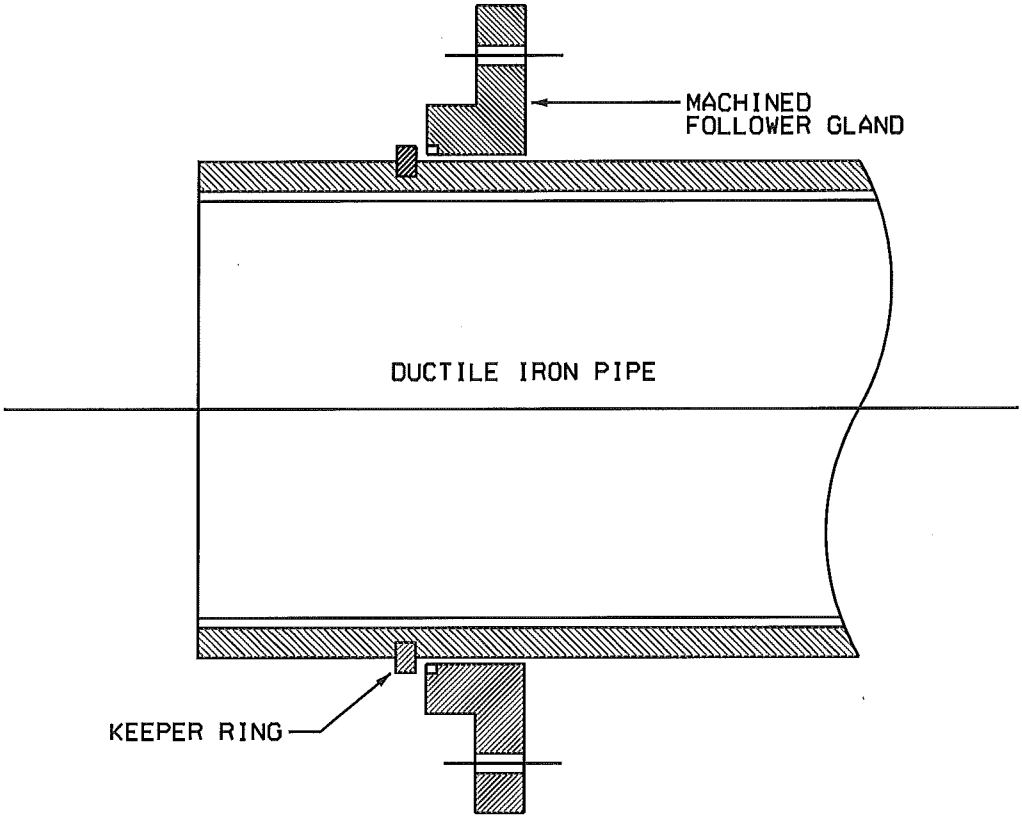

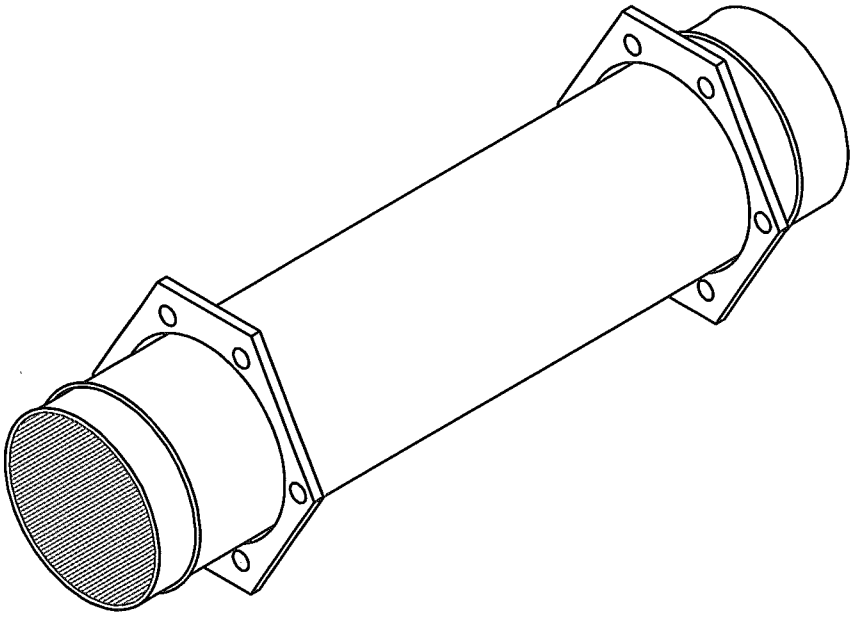

City of Newberg
PUBLIC WORKS ENGINEERING DIVISION
414 E. FIRST STREET NEWBERG, OREGON 97132

REVISIONS:

MJ HOLDING SPOOL

SCALE:	N.T.S.
DATE:	May 2007
APPROVED BY:	D. Danicic
STANDARD DRAWING	305

EXHIBIT "B" TO
RESOLUTION NO. 2011-2936

LENGTH (L1) OF PIPE REQUIRED FOR RESTRAINT (FEET)										
	Horizontal Bend				Dead End	Reducer (restrained length for large diamter side)				
Diameter	90°	45°	22 1/2°	11 1/4°		4"	6"	8"	10"	12"
4"	30	23	20	19	44	--	37	53	65	77
6"	35	25	21	20	55	--	--	38	53	67
8"	40	27	22	20	66	--	--	--	37	54
10"	44	29	23	21	76	--	--	--	--	51
12"	49	31	24	21	86	--	--	--	--	--

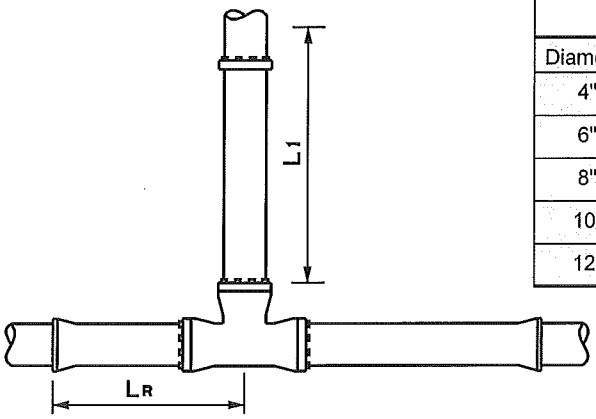

TEE CONFIGURATION

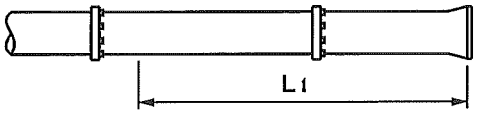

DEAD END

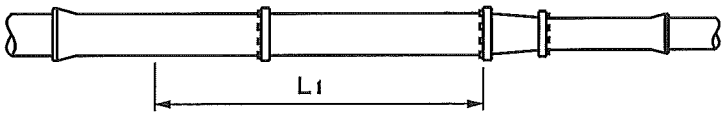

REDUCER

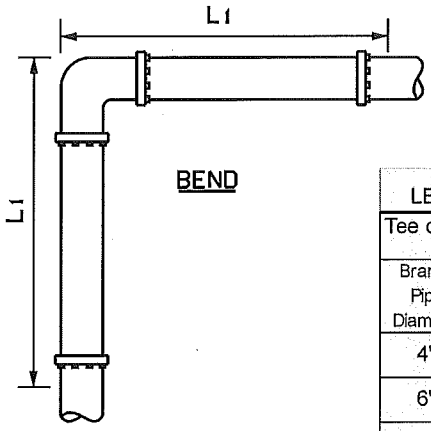

BEND

LENGTH (L1) OF PIPE REQUIRED FOR RESTRAINT WHEN USING TEES (FEET)										
Tee configurations (Restraint length for Branch)										
Branch Pipe Diameter	LR=0	LR=2	LR=4	LR=6	LR=8	LR=10	LR=12	LR=14	LR=16	LR=18
4"	44	30	19	19	19	19	19	19	19	19
6"	55	45	36	26	19	19	19	19	19	19
8"	66	59	52	44	37	30	23	19	19	19
10"	76	70	64	58	53	47	41	35	30	24
12"	86	81	76	71	67	62	57	52	47	43

NOTES:

1. ALL JOINTS WITHIN THE LENGTH "L1" FROM THE ABOVE TABLE, SHALL BE RESTRAINED.
2. THE JOINT RESTRAINT LENGTHS CALCULATED ARE FOR FITTINGS USED TO CHANGE PIPE HORIZONTAL ALIGNMENT ONLY. FOR APPLICATIONS WHERE FITTINGS ARE USED TO CHANGE THE SLOPE OF THE PIPE, THE DESIGN ENGINEER SHALL INCLUDE THE JOINT RESTRAINT REQUIREMENTS ON THE PROJECT DRAWINGS.
3. IF AN UNANTICIPATED NEED FOR JOINT RESTRAINT ARISES TO CHANGE THE SLOPE OF THE PIPE, THE CONTRACTOR SHALL CONTACT THE DESIGN ENGINEER.
4. JOINT TYPES NOT COVERED IN ABOVE TABLE MUST BE DESIGNED INDIVIDUALLY ON ORDER TO DETERMINE APPROPRIATE RESTRAINED LENGTH.
5. THE SMALL SIDE OF A REDUCER DOES NOT REQUIRE RESTRAINT IF THE LARGE DIAMETER SIDE IS PROPERLY RESTRAINED.
6. ABOVE RESTRAINED LENGTHS ARE BASED ON:
   A. TEST PRESSURE OF 150 PSI
   B. MINIMUM OF 3 FEET COVER
   C. CLASS "B" PIPE ZONE CONDITIONS
   D. WHEN ORGANIC OR CLAY SOILS ARE BEING USED FOR BACKFILL, GRANULAR BACKFILL MUST BE USED FOR BEDDING AND BACKFILL TO A HEIGHT OF 6 9/32" OVER THE TOP OF THE PIPE BEFORE OTHER SOILS ARE PLACED.
   E. UNCOATED PIPE. THIS TABLE DOES NOT APPLY TO PIPE ENCASED IN POLYETHYLENE

ANY REDUCTION OF THESE VALUES AS A RESULT OF OTHER CONDITIONS ENCOUNTERED SHALL BE BASED ON THE APPROPRIATE EVALUATION AND RECOMMENDATION BY A QUALIFIED, REGISTERED ENGINEER AND WITH APPROVAL BY THE CITY.

City of Newberg
PUBLIC WORKS ENGINEERING DIVISION
414 E. FIRST STREET NEWBERG, OREGON 97132

REVISIONS:

JOINT RESTRAINT

SCALE: N.T.S.
DATE: May 2007
APPROVED BY: D. Danicic
STANDARD DRAWING 306

EXHIBIT "B" TO
RESOLUTION NO. 2011-2936

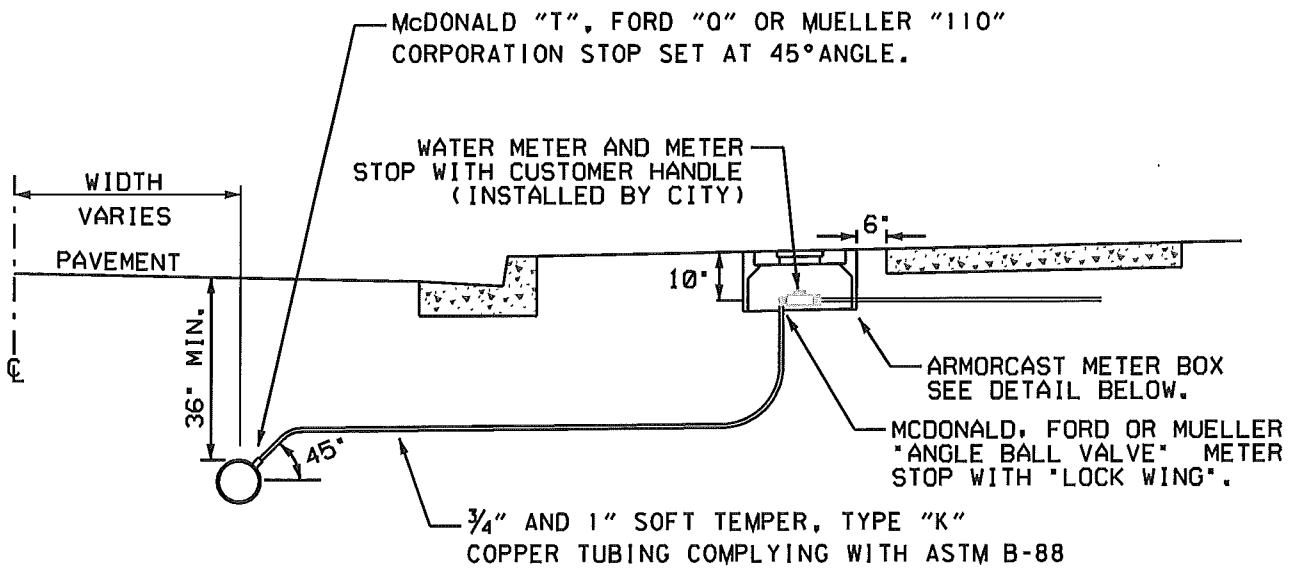

ALL FITTINGS MUST BE COMPRESSION TYPE
NO SOLDERED, FLARED OR JOINT FITTINGS

POLYMER CONCRETE METER BOX

APPROVED ALTERNATE METER BOXES

- NEWBASIS BOX WFB1220122A0C
NEWBASIS LID WPC1220A02A0B17
(PIT LIT READER HOLE)
- CHRISTY FIBERLITE BOX 1220
FL12D
CHRISTY FIBERLITE LID 1220
FL12DP

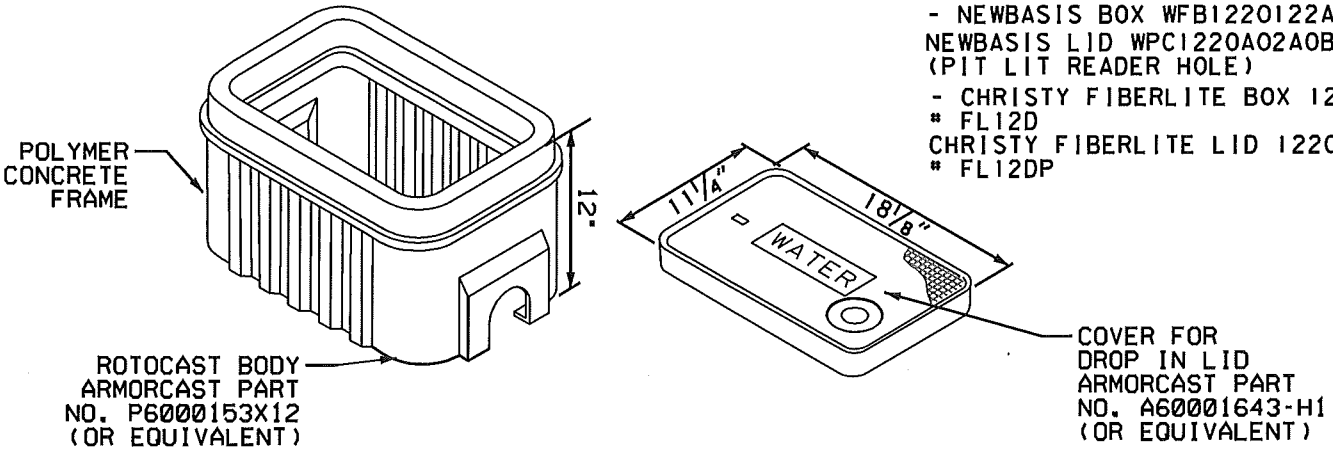

NOTES

1. SUBSTITUTES FOR ANY MATERIALS SHOWN SHALL BE APPROVED BY THE CITY ENGINEER
2. ALL PIPE AND STRUCTURE ZONES SHALL BE BACKFILLED USING ¾" MINUS CRUSHED ROCK AND COMPACTED TO 95% MAXIMUM DENSITY AS DETERMINED BY AASHTO T-180
3. WHEN AN ACTIVE CATHODIC PROTECTED SYSTEM IS ENCOUNTERED, SCHEDULE 40 PVC SHALL BE INSTALLED ACCORDING TO STANDARD DRAWING NO. 316
4. METER BOX SHALL BE CENTERED OVER THE COMPLETED METER ASSEMBLY
5. METER BOX SHALL MATCH SIDEWALK GRADE (IF SIDEWALK EXISTS) OR BE SET FLUSH WITH GROUND SURFACE.
6. ALL FITTINGS SHALL BE COMPRESSION TYPE.
7. FOR LOCATION OF WATER MAIN, SEE STANDARD DRAWING NO. 103

City of Newberg PUBLIC WORKS ENGINEERING DIVISION 414 E. FIRST STREET NEWBERG, OREGON 97132	REVISIONS:	STANDARD 3/4" AND 1" WATER SERVICE	SCALE: N.T.S. DATE: May 2007 APPROVED BY: D. Danicic STANDARD DRAWING 307

EXHIBIT "B" TO
RESOLUTION NO. 2011-2936

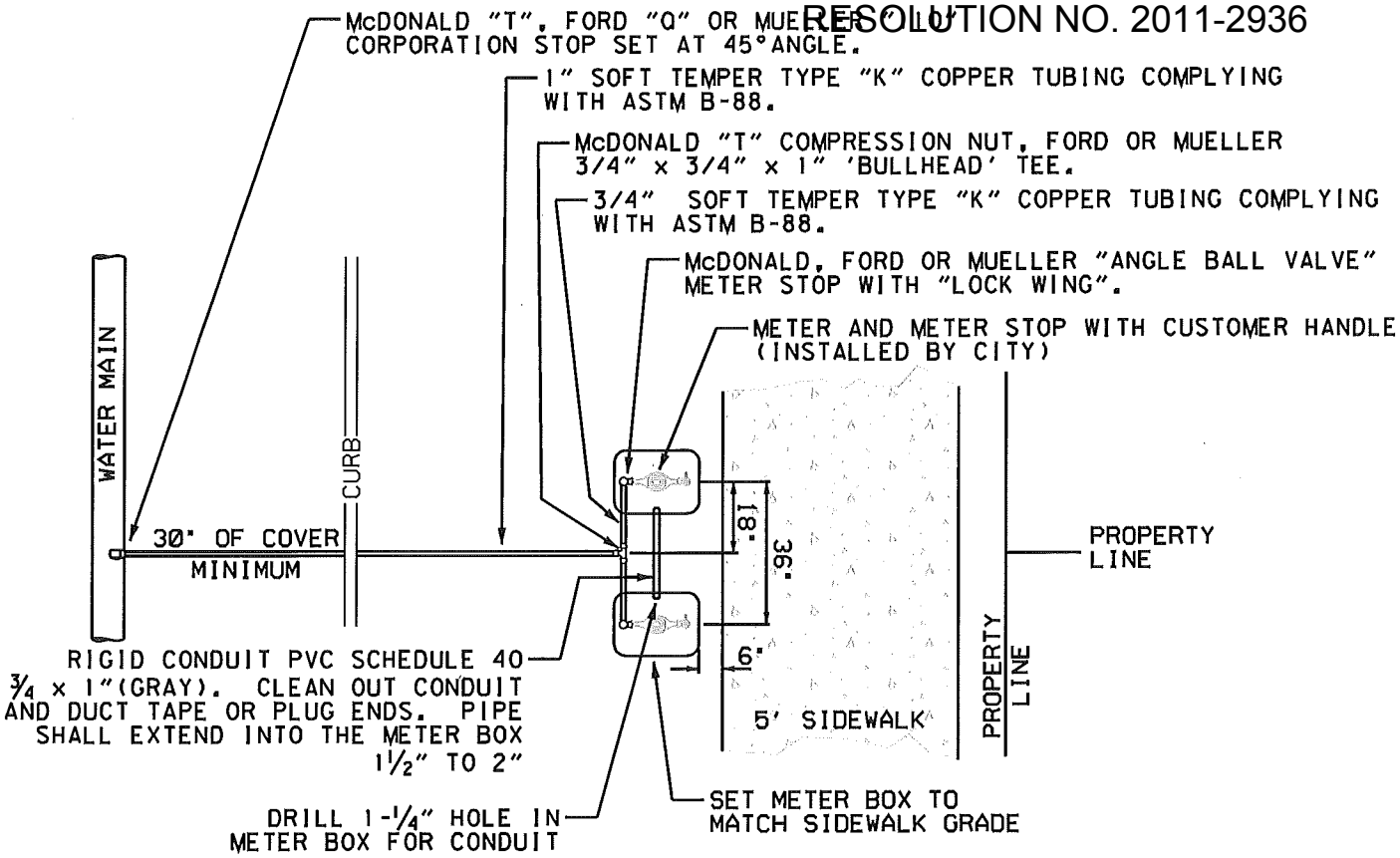

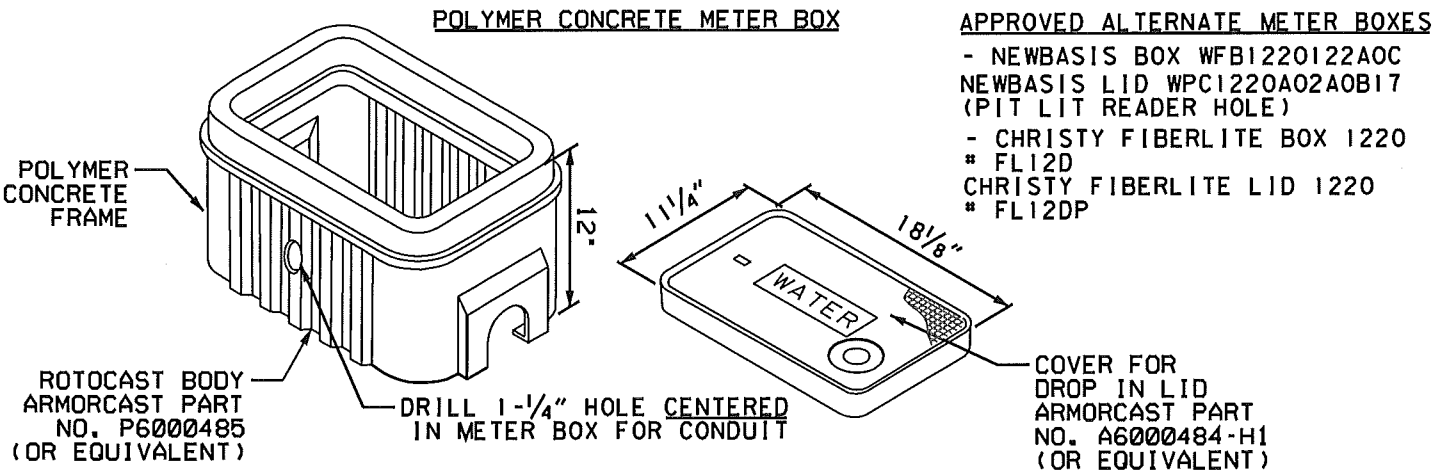

NOTES

1. SUBSTITUTES FOR ANY MATERIALS SHOWN SHALL BE APPROVED BY THE CITY.
2. ALL PIPE AND STRUCTURE ZONES SHALL BE BACKFILLED USING 3/4" MINUS CRUSHED ROCK AND COMPACTED TO 95% MAXIMUM DENSITY AS DETERMINED BY AASHTO T-180.
3. WHEN AN ACTIVE CATHODIC PROTECTED SYSTEM IS ENCOUNTERED, SCHEDULE 40 PVC SHALL BE INSTALLED ACCORDING TO STANDARD DRAWING NO. 316.
4. METER BOX SHALL BE CENTERED OVER THE COMPLETED METER ASSEMBLY.
5. METER BOX SHALL MATCH SIDEWALK GRADE (IF SIDEWALK EXISTS) OTHERWISE SET FLUSH WITH SURROUNDING GROUND SURFACE.
6. ALL FITTINGS SHALL BE COMPRESSION TYPE.
7. FOR LOCATION OF WATER MAIN, SEE STANDARD DRAWING NO. 103.

City of Newberg PUBLIC WORKS ENGINEERING DIVISION 414 E. FIRST STREET NEWBERG, OREGON 97132	REVISIONS:	DOUBLE WATER SERVICE	SCALE: N.T.S. DATE: May 2007 APPROVED BY: D. Danicic STANDARD DRAWING 308

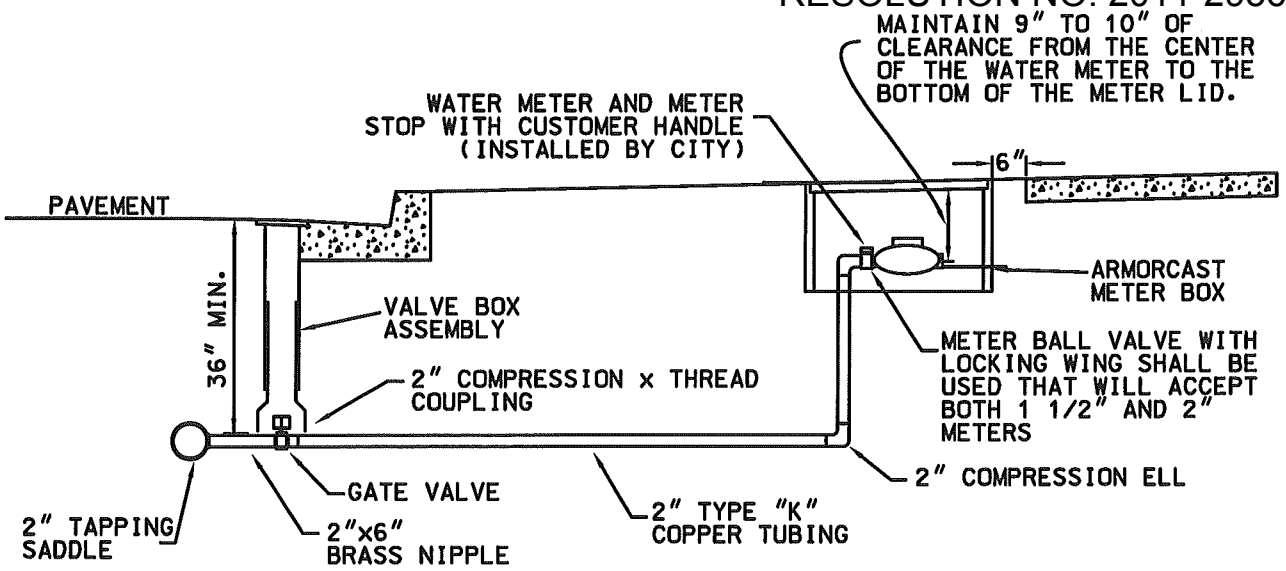

ALL FITTINGS MUST BE COMPRESSION TYPE
NO SOLDERED, FLARED OR JOINT FITTINGS

APPROVED ALTERNATE METER BOXES

– CHRISTY FIBERLITE BOX #1730
CHRISTY FIBERLITE LID #1730
WITH TOUCH READ HOLE

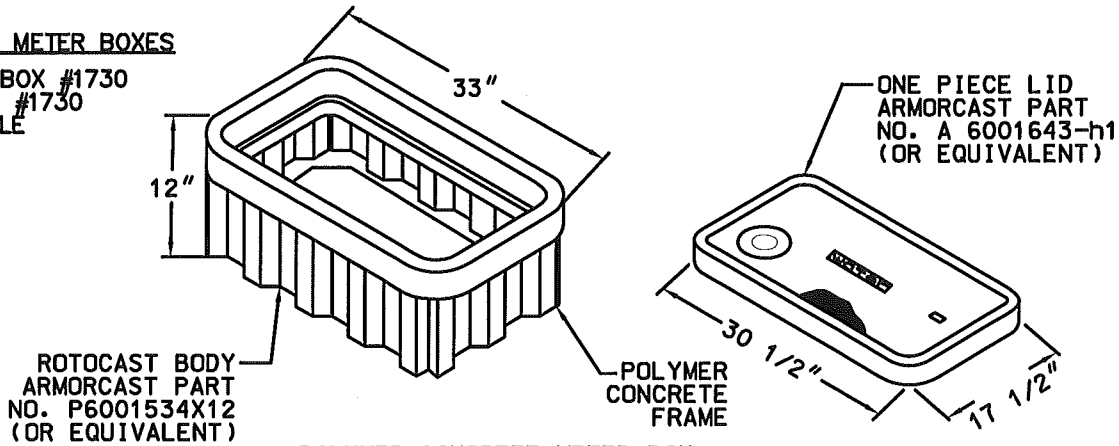

POLYMER CONCRETE METER BOX

MATERIALS

1. 2" CAST IRON BODY GATE VALVE WITH STANDARD 2" SQUARE OPERATING NUT.
2. SOFT TEMPER, TYPE "K" COPPER TUBING COMPLYING WITH ASTM B-88.
3. McDONALD "T" COMPRESSION NUT, FORD OR MUELLER METER STOP.
4. ALL FITTINGS ARE COMPRESSION TYPE.

NOTES

1. SUBSTITUTES FOR ANY MATERIALS SHOWN SHALL BE APPROVED BY THE CITY ENGINEER.
2. ALL PIPE AND STRUCTURE ZONES SHALL BE BACKFILLED USING 3/4"-0 CRUSHED AGGREGATE AND COMPACTED TO 95% MAXIMUM DENSITY AS DETERMINED BY AASHTO T-180.
3. METER BOX SHALL BE CENTERED OVER THE COMPLETED METER ASSEMBLY.
4. VALVE OPERATING NUT EXTENSION SHALL BE USED IF OPERATING NUT IS GREATER THAN 3' DEPTH FROM FINISH GRADE.

City of Newberg
PUBLIC WORKS ENGINEERING DIVISION
414 E. FIRST STREET NEWBERG, OREGON 97132
PHONE 503-537-1240 - FAX 503-537-1277

REVISIONS:	STANDARD 1 1/2 " & 2" WATER SERVICE	SCALE: N.T.S.
3-15-2010		DATE: May 2007
		APPROVED BY: D. Danicic
		STANDARD DRAWING 309

EXHIBIT "B" TO
RESOLUTION NO. 2011-2936

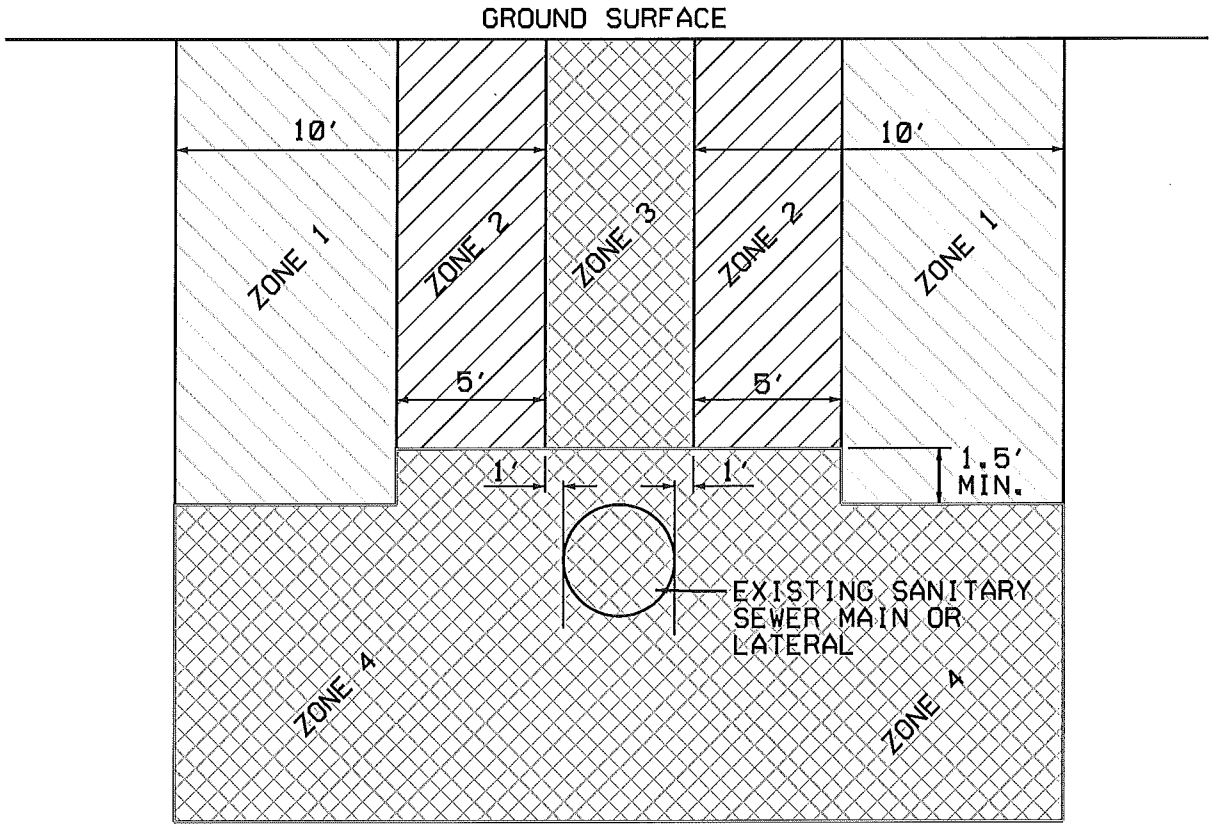

ZONE 1: ONLY CROSSING RESTRICTIONS APPLY

ZONE 2: CASE BY CASE DETERMINATION

ZONE 3: PARALLEL WATERLINE PROHIBITED

ZONE 4: PARALLEL WATERLINE PROHIBITED

NOTES:

1. WHERE THE PROPOSED WATERLINE WILL BE INSTALLED PARALLEL TO AN EXISTING GRAVITY SEWER MAIN OR LATERAL LINE, THE SEPARATION BETWEEN THE TWO SHALL BE AS INDICATED ABOVE.

2. CROSSINGS
   A. WHEREVER POSSIBLE, THE BOTTOM OF THE WATERLINE SHALL BE 1.5 FEET ABOVE THE TOP OF THE SEWER LINE, AND ONE FULL LENGTH OF WATERLINE SHALL BE CENTERED AT THE CROSSING.
   B. WHERE IT IS NOT POSSIBLE FOR THE WATERLINE TO BE 1.5 FEET ABOVE THE SEWER LINE, OR THE WATERLINE PASSES UNDER THE SEWER LINE, THE EXISTING SEWER LINE SHALL BE EXPOSED FOR A DISTANCE OF 10 FEET ON EACH SIDE OF THE CROSSING AND THE EXISTING PIPELINE SHALL BE REPLACED WITH C-900 PVC, DR-18, DR-25 OR CLASS 50 DUCTILE IRON PIPE AS APPROVED BY THE ENGINEER, AND THE FULL LENGTH OF WATER PIPE SHALL BE CENTERED AT THE CROSSING OR AS APPROVED BY THE ENGINEER. A DISTANCE OF 10 FEET ON EACH SIDE OF THE CROSSING

City of Newberg
PUBLIC WORKS ENGINEERING DIVISION
414 E. FIRST STREET NEWBERG, OREGON 97132

REVISIONS:

WATER LINE CROSSINGS

SCALE:	N.T.S.
DATE:	May 2007
APPROVED BY:	D. Danicic
STANDARD DRAWING	310

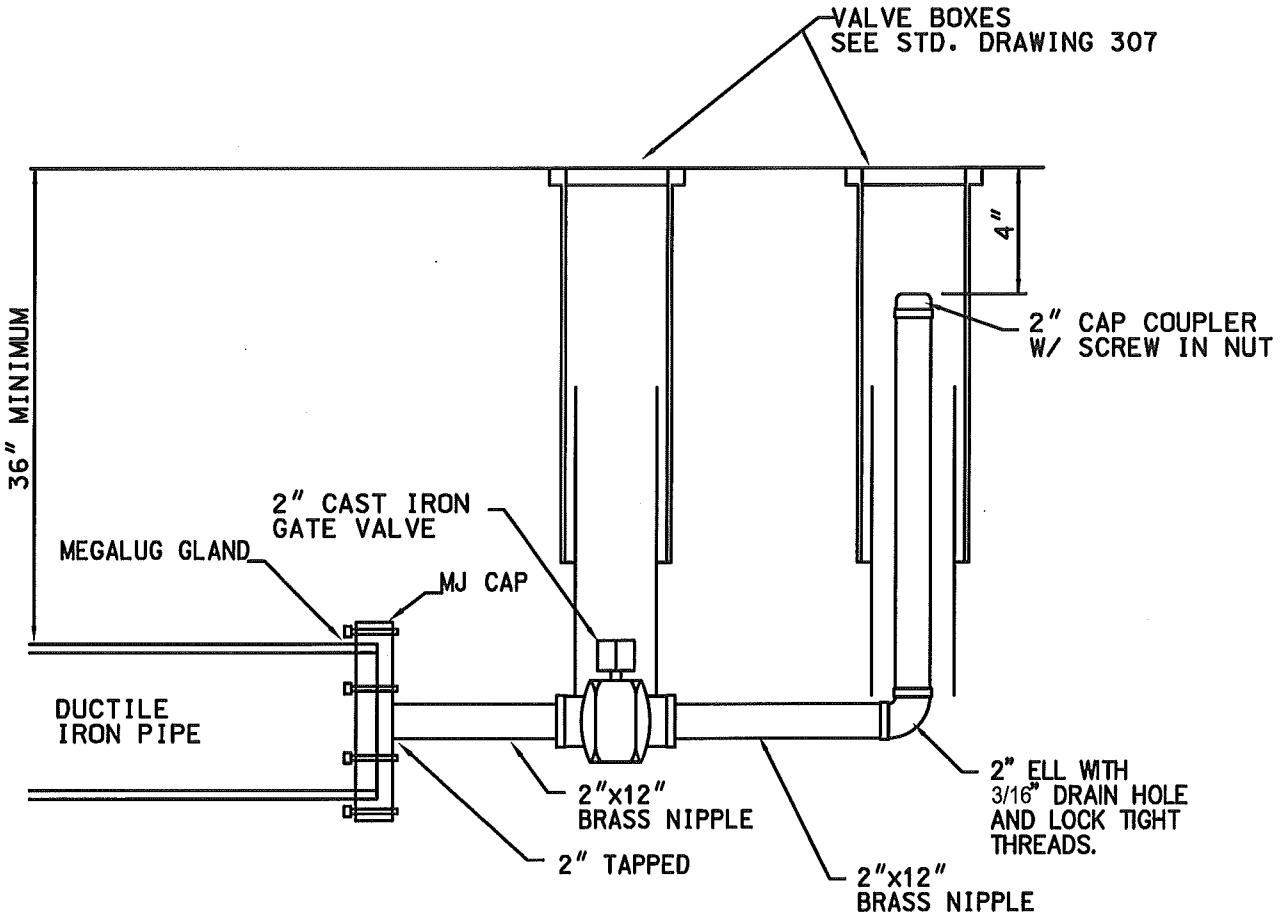

1. COAT ALL GALVANIZED PIPE OR EXPOSED STEEL WITH PROTECTIVE COATING CONFORMING TO AWWA C 203
2. RESTRAIN TYTON JOINT PLUG TO PIPE
3. THIS STANDARD APPLICABLE FOR PIPE SIZES THROUGH 8"
4. VALVE OPERATING NUT EXTENSION SHALL BE USED IF OPERATING NUT IS GREATER THAN 3' DEPTH FROM FINISH GRADE.

City of Newberg
PUBLIC WORKS ENGINEERING DIVISION
414 E. FIRST STREET NEWBERG, OREGON 97132
PHONE 503-537-1240 - FAX 503-537-1277

REVISIONS:	BLOW-OFF ASSEMBLY	SCALE: N.T.S.
3-15-2010		DATE: May 2007
		APPROVED BY: D. Danicic
		STANDARD DRAWING 311

EXHIBIT "B" TO
RESOLUTION NO. 2011-2936

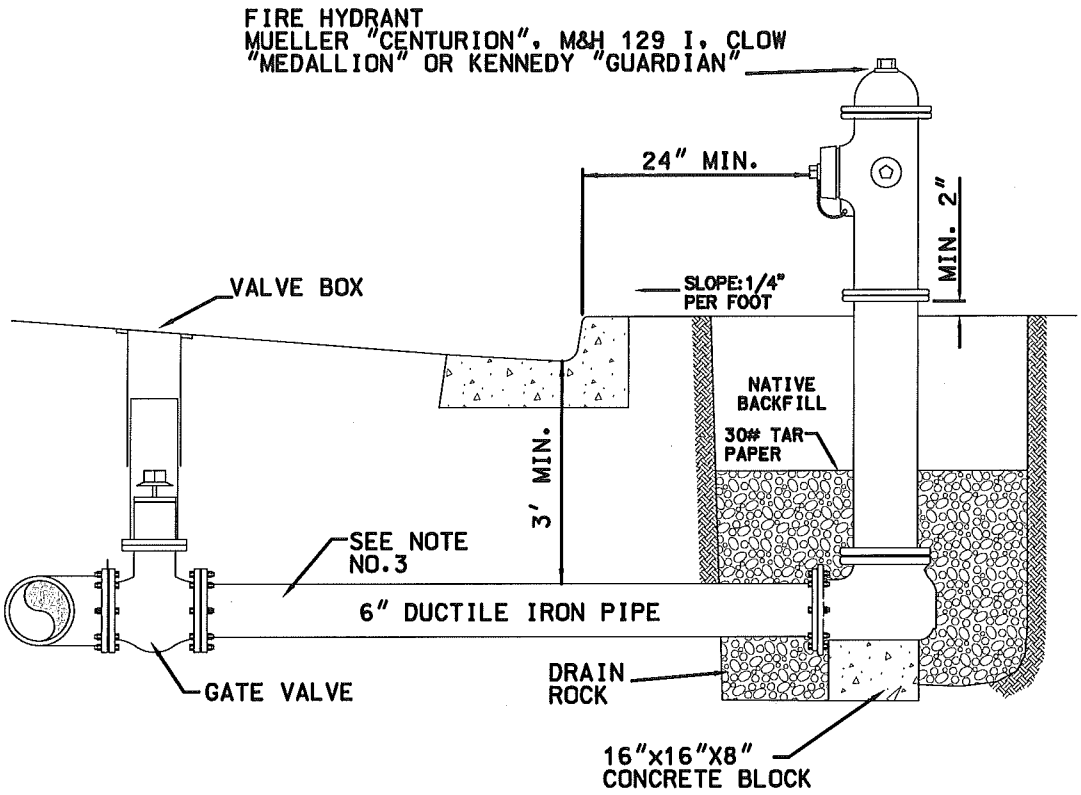

1. HYDRANT TO HAVE TWO 2 1/2" AND ONE 4 1/2" OPENING (ANSI STD.).
2. 6" MINIMUM PIPE SIZE SUPPLYING HYDRANT.
3. USE 6" MJ HOLDING SPOOL PER DWG. 305
4. ADJUSTING SPOOL NOT TO BE USED ON NEW CONSTRUCTION.
5. HYDRANTS SHALL BE INSTALLED UPON A PRE-FORMED CONCRETE BLOCK WITH CLEAN 2" DRAIN ROCK PLACED A MINIMUM OF 6" ABOVE DRAIN HOLES.
6. 30# TAR PAPER SHALL BE PLACED ON TOP OF THE DRAIN ROCK TO SEPARATE ROCK FROM NATIVE MATERIAL.
7. ENTIRE FIRE HYDRANT SPOOL SHALL BE RESTRAINED WITH FIELD-LOK GASKETS/MEGALUGS
8. VALVE OPERATING NUT EXTENSION SHALL BE USED IF OPERATING NUT IS GREATER THAN 3' DEPTH FROM FINISH GRADE.

City of Newberg
PUBLIC WORKS ENGINEERING DIVISION
414 E. FIRST STREET NEWBERG, OREGON 97132
PHONE 503-537-1240 - FAX 503-537-1277

REVISIONS:	FIRE HYDRANT ASSEMBLY	SCALE: N.T.S.
3-15-2010		DATE: JULY 2004
		APPROVED BY: D. Danicic
		STANDARD DRAWING 312

EXHIBIT "B" TO
RESOLUTION NO. 2011-2936

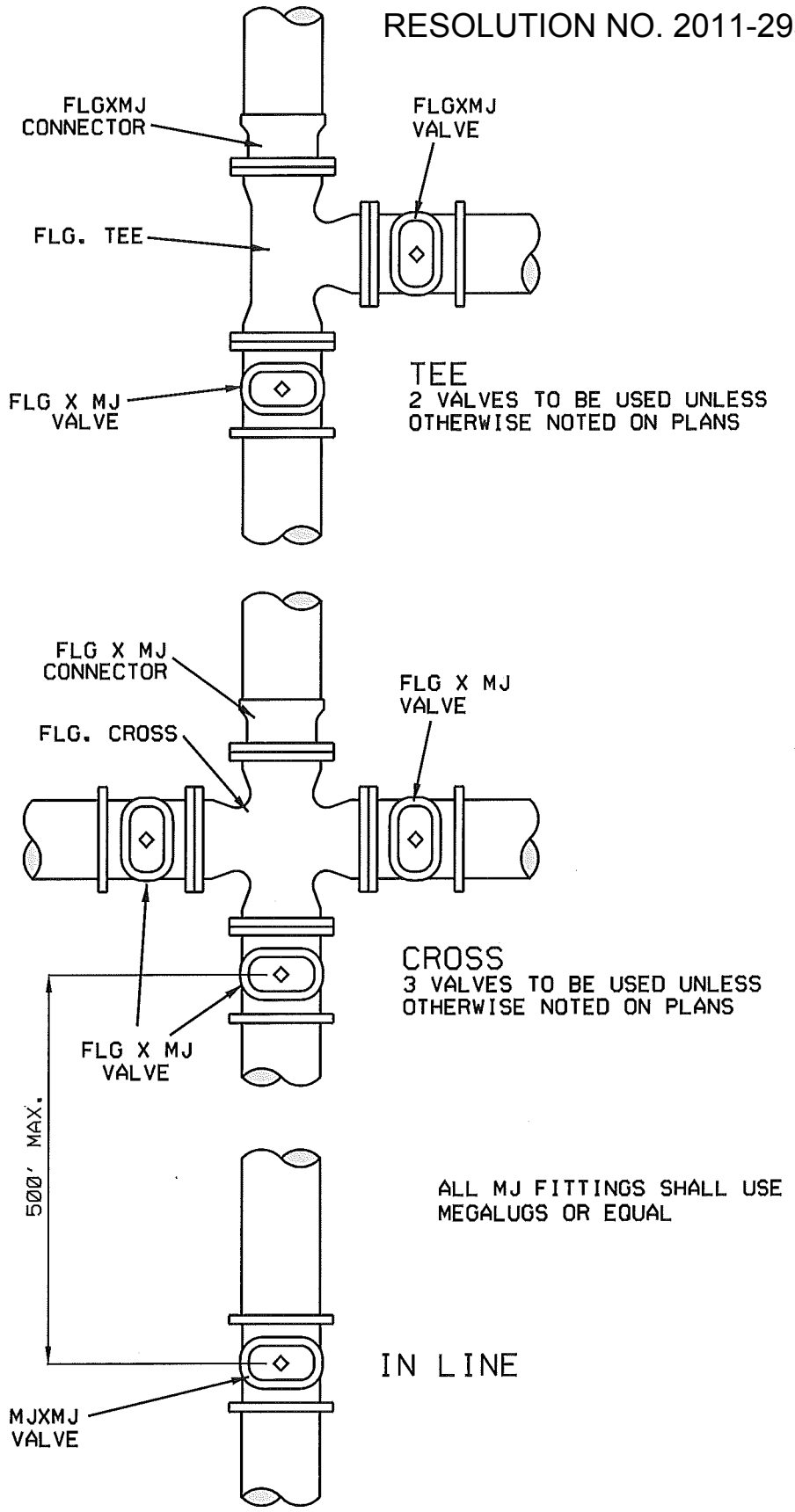

City of Newberg
PUBLIC WORKS ENGINEERING DIVISION
414 E. FIRST STREET NEWBERG, OREGON 97132

REVISIONS:

VALVE LOCATIONS AND SPACING

SCALE:	N.T.S.
DATE:	May 2007
APPROVED BY:	D. Danicic
STANDARD DRAWING	313

EXHIBIT "B" TO
RESOLUTION NO. 2011-2936

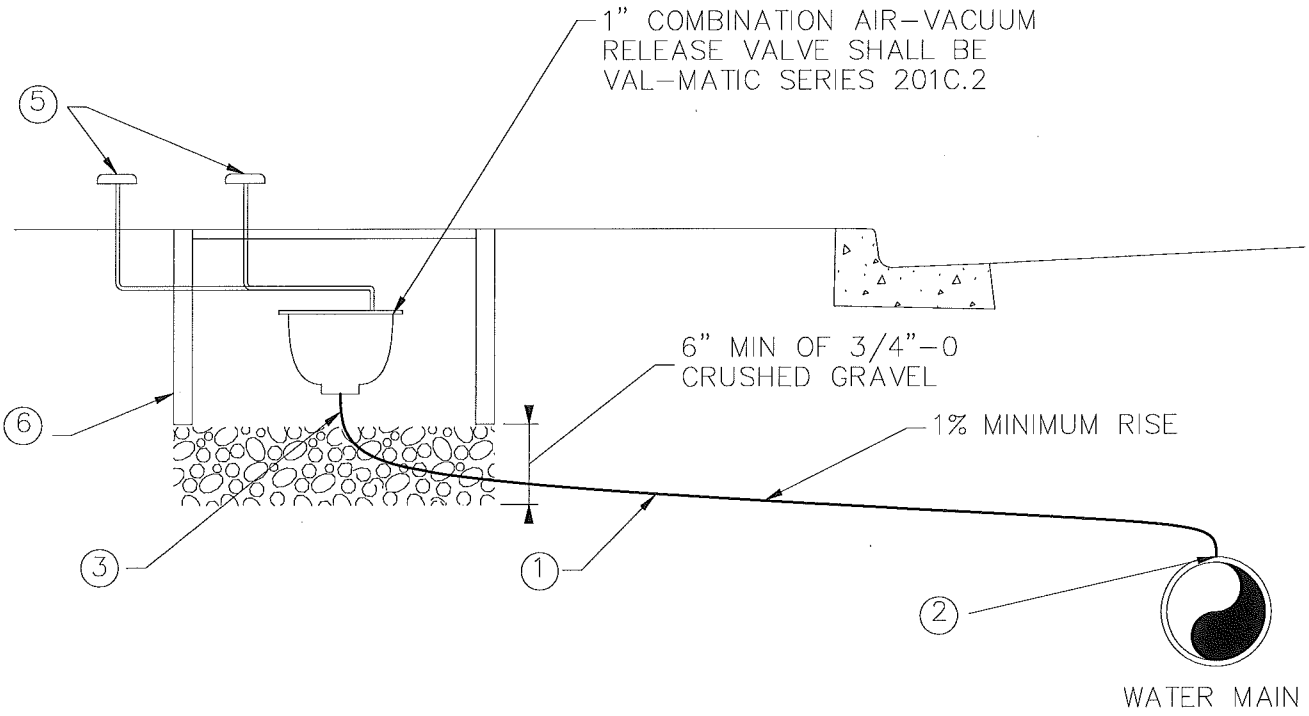

NOTES/MATERIALS

1. 1" SOFT TEMPER TYPE "K" COPPER TUBING COMPLYING WITH ASTM B-88.
2. McDONALD "T", FORD "Q" OR MUELLER "110" BALL CORPORATION STOP.
3. McDONALD, FORD OR MUELLER BALL VALVE WITH OPERATING HANDLE
4. ALL FITTINGS SHALL BE McDONALD "T", FORD "Q" OR MUELLER "110" COMPRESSION TYPE.
5. "TEE" STYLE GALVANIZED BLOW OFF (MINIMUM 6" ABOVE FINISHED GRADE.)
6. ARMORCAST METER BOX, PART NO. P6001534X22 WITH ONE PIECE POLYMER CONCRETE LID.

City of Newberg PUBLIC WORKS ENGINEERING DIVISION 414 E. FIRST STREET NEWBERG, OREGON 97132 PHONE 503-537-1240 - FAX 503-537-1277	REVISIONS: 11/30/2010	1" COMBINATION AIR - VACUUM RELEASE ASSEMBLY	SCALE: N.T.S. DATE: May 2007 APPROVED BY: D. Danicic STANDARD DRAWING 314

EXHIBIT "B" TO
RESOLUTION NO. 2011-2936

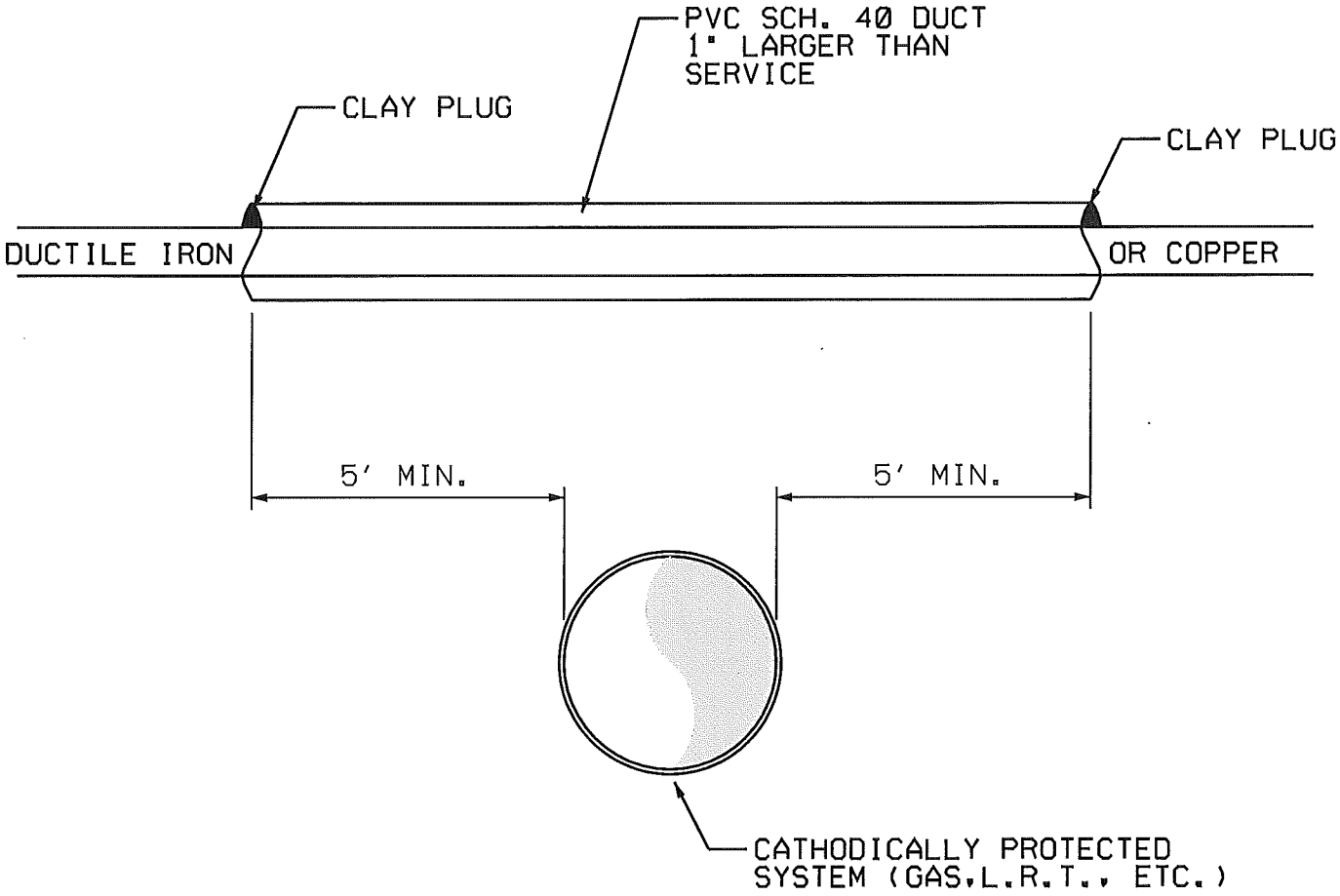

City of Newberg
PUBLIC WORKS ENGINEERING DIVISION
414 E. FIRST STREET NEWBERG, OREGON 97132

REVISIONS:

CATHODIC PROTECTION

SCALE:	N.T.S.
DATE:	May 2007
APPROVED BY:	D. Danicic
STANDARD DRAWING	316

EXHIBIT "B" TO
RESOLUTION NO. 2011-2936

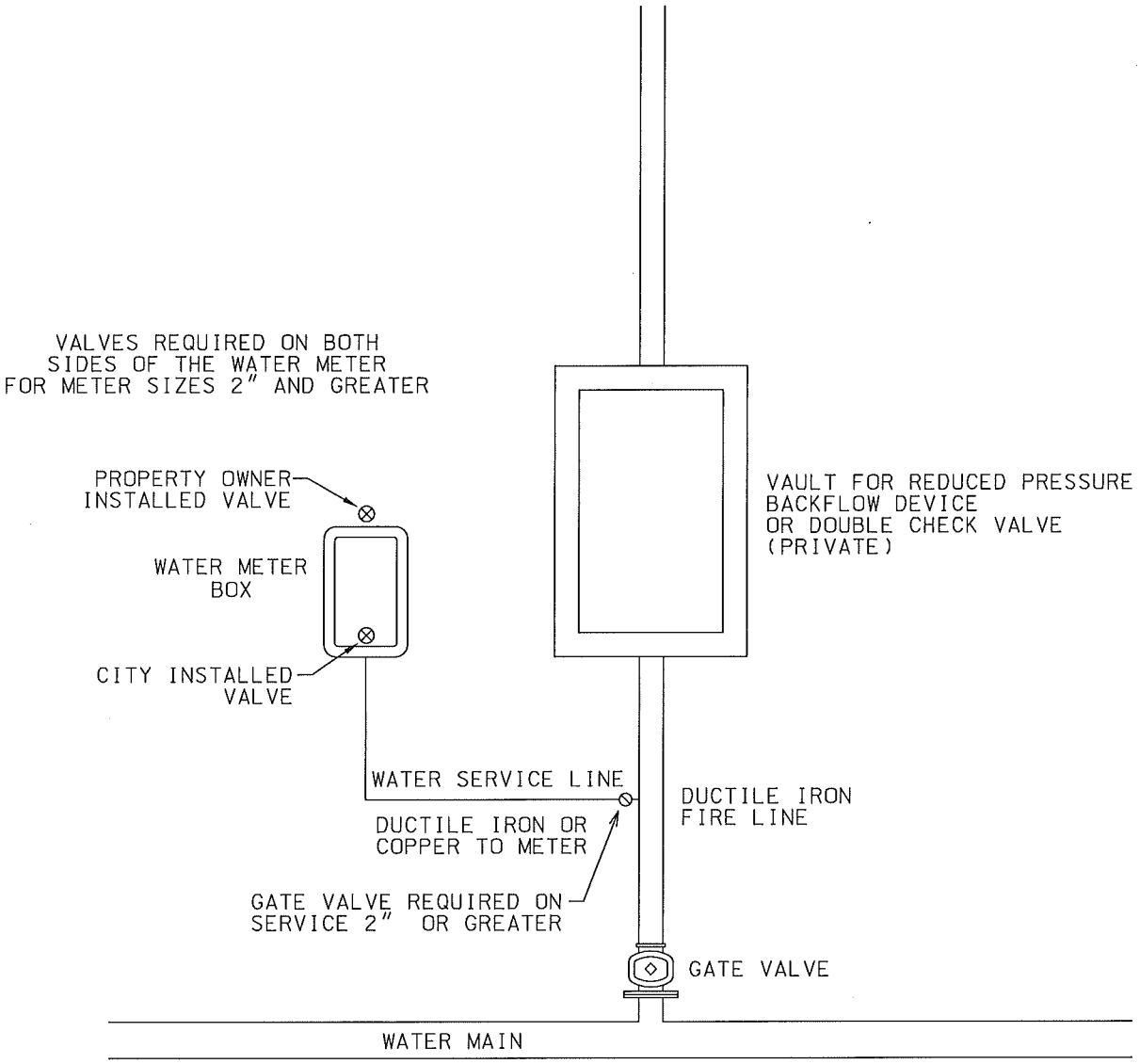

City of Newberg PUBLIC WORKS ENGINEERING DIVISION 414 E. FIRST STREET NEWBERG, OREGON 97132 PHONE 503-537-1240 - FAX 503-537-1277	REVISIONS: 11/30/2010	VAULT AND WATER SERVICE	SCALE: N.T.S. DATE: May 2007 APPROVED BY: D. Danicic STANDARD DRAWING 317

EXHIBIT "B" TO
RESOLUTION NO. 2011-2936

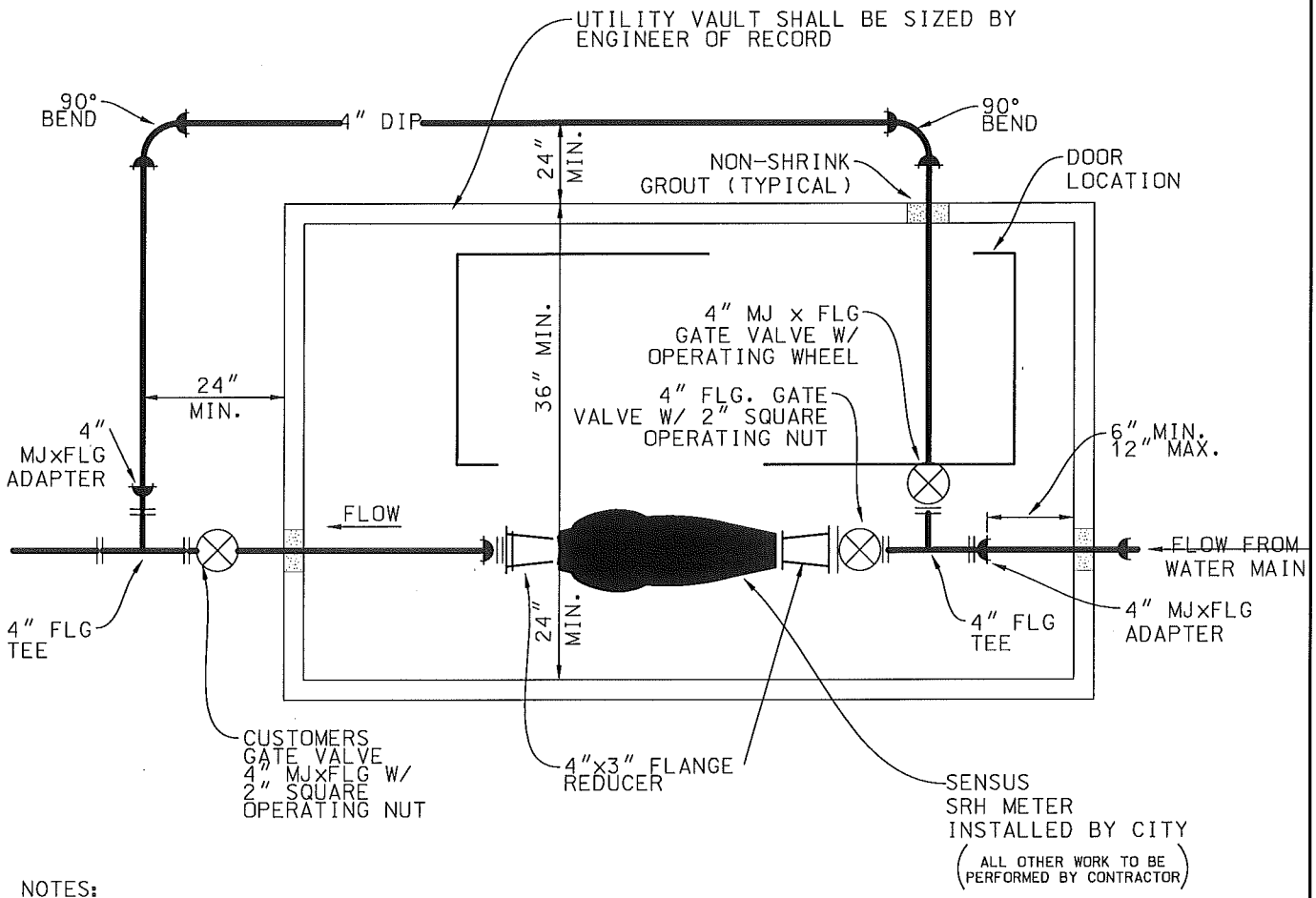

NOTES:

- METER AND DOWNSTREAM VALVE TO BE INSTALLED BY THE CITY ONCE NEW PIPING AND FITTINGS HAVE BEEN TESTED AND ACCEPTED.
- ALL VAULT WALL OPENINGS SHALL BE CORE DRILLED AND SEALED WITH LINK-SEAL BRAND PIPE SEAL OR APPROVED EQUAL.
- TOP OF VAULT SHALL BE A MINIMUM OF 12" ABOVE FINISHED GRADE.
- INSTALL 4" DRAIN FROM BOTTOM OF VAULT FLOOR TO DAYLIGHT, TO BACKFLOW ASSEMBLY VAULT, TO STORM DRAIN SYSTEM OR TO APPROVED SUMP WITH SUMP PUMP. IN NO CASE SHALL BACKFLOW ASSEMBLY VAULT DRAIN INTO METER VAULT.
- INSTALL 4" BACKWATER VALVE, MDL. NO. 7022 AND SMITH 4" FLOOR DRAIN MDL. NO. 2210 OR APPROVED EQUAL ON FLOOR DRAIN.
- VAULT SHALL BE CLEAN, DRY AND FREE OF DEBRIS PRIOR TO METER INSTALLATION
- ALL MECHANICAL JOINTS SHALL BE RESTRAINED WITH "MEGALUG" RETAINER GLANDS, OR EQUAL.
- SERVICE LINE INTO VAULT SHALL BE MECHANICALLY RESTRAINED FROM MAINLINE THROUGH VAULT.
- ALL PIPING TO BE BACKFILLED WITH GRANULAR MATERIAL.
- INSTALL A MIN. OF 3 PIPE SUPPORTS IN VAULT (GRINNELL NO. 264,ELCEN NO. 50 OR APPROVED EQUAL).
- ALL PIPING AND FITTINGS IN VAULT SHALL BE LEVEL AND A MINIMUM OF 12" AND A MAX. OF 48" ABOVE THE FLOOR OF VAULT.
- ONLY APPROVED RESILIENT WEDGE VALVES ARE ALLOWED.
- ALL VAULT LIDS SHALL BE EQUIPPED WITH 1 TRPL METER HOLE IN DOORS. DOORS SHALL BE LOCATED NEAREST METER, CLOSEST TO STREET OR PUBLIC R-O-W.
- VAULT SHALL BE EQUIPPED WITH AN OSHA APPROVED LADDER. IF VAULT DEPTH IS GREATER THAN 6', AN OSHA APPROVED EXTENSION LADDER SHALL BE INSTALLED.
- ALL PIPE UP TO THE CUSTOMERS GATE VALVE SHALL BE CLASS 52 DUCTILE IRON AND INSTALLED LEVEL.
- ALL FITTINGS, VALVES AND PIPING THROUGH ENTIRE VAULT SHALL BE LEVEL AT COMPLETION OF INSTALLATION.
- VAULT SHALL BE SEALED WITH "CRYSTAL SEAL" AT MANUFACTURER.
- ADJUST PIPE SIZE ACCORDING TO METER SIZE.(4" MINIMUM)

City of Newberg PUBLIC WORKS ENGINEERING DIVISION 414 E. FIRST STREET NEWBERG, OREGON 97132 PHONE 503-537-1240 - FAX 503-537-1277	REVISIONS: 10/28/08	WATER SERVICE FOR 3" AND LARGER	SCALE: N.T.S. DATE: JULY 2004 APPROVED BY: D. Danicic STANDARD DRAWING 318

EXHIBIT "B" TO
RESOLUTION NO. 2011-2936

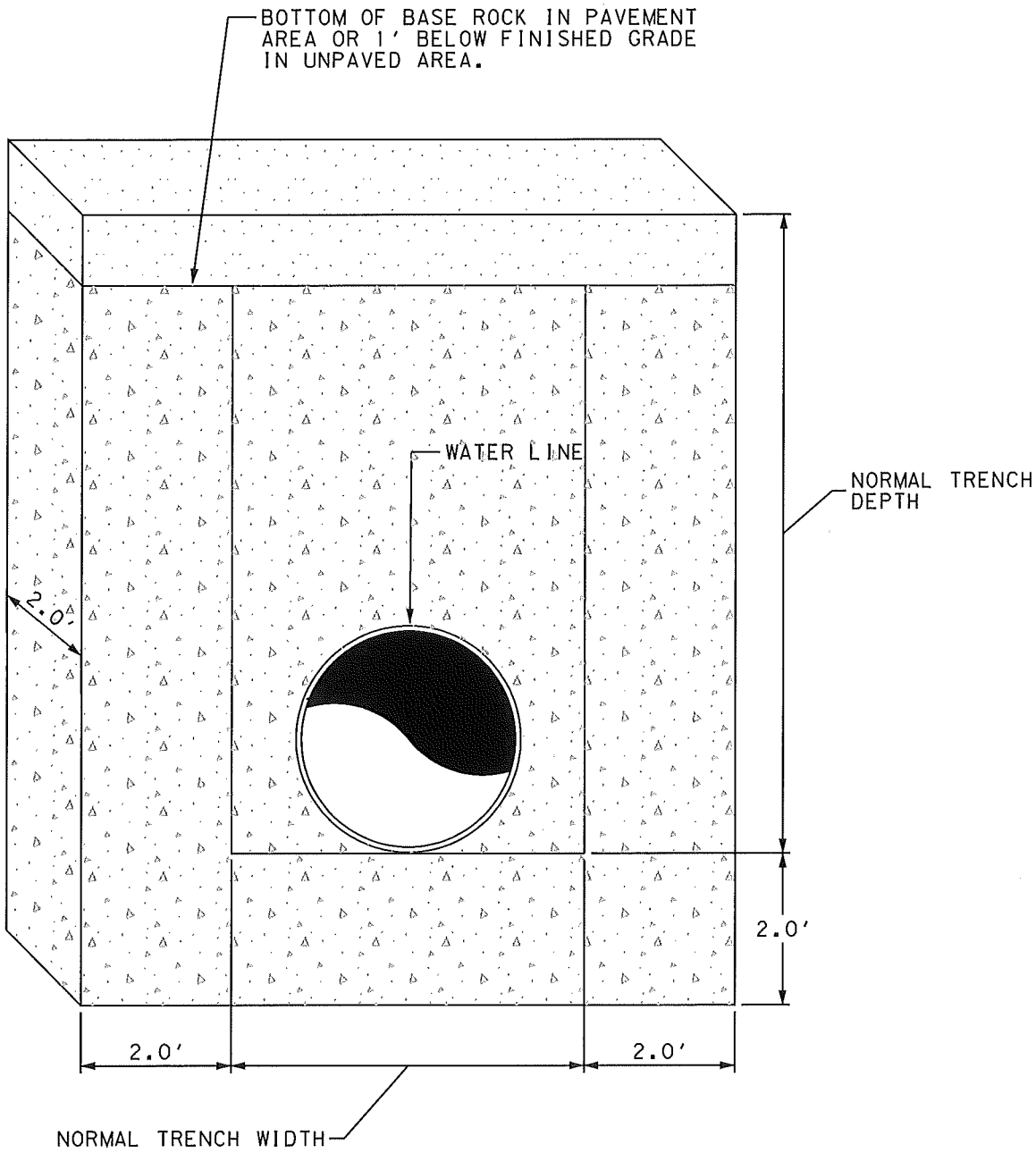

NOTES;

1. TRENCH DAM MATERIAL SHALL BE 100 PSI CDF.
2. BEARING AREA OF TRENCH DAM SHALL BE RESTING ON UNDISTURBED SOIL.
3. NO FITTINGS SHALL BE LOCATED WITHIN 5' OF TRENCH DAM.
4. REMOVE ALL ORGANIC MATERIAL PRIOR TO POURING CDF CONCRETE.

City of Newberg PUBLIC WORKS ENGINEERING DIVISION 414 E. FIRST STREET NEWBERG, OREGON 97132	REVISIONS:	TRENCH DAM	SCALE: N.T.S. DATE: APPROVED BY: 12-15-2006 STANDARD DRAWING 319

EXHIBIT "B" TO
RESOLUTION NO. 2011-2936

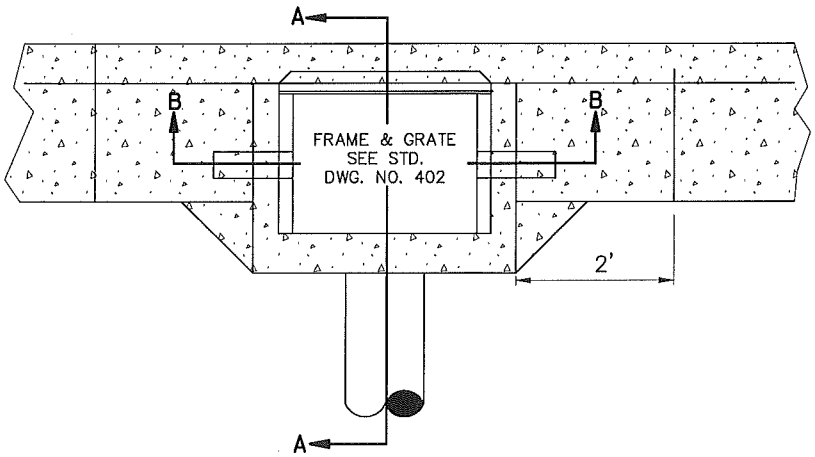

PLAN

INLET TYPE	W
N-1, CN-1	1'-8?"
N-2, CN-2	2'-3?"

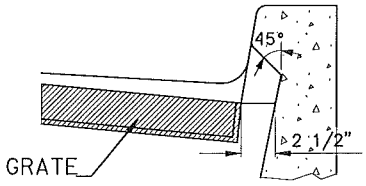

CURB OPENING DETAIL

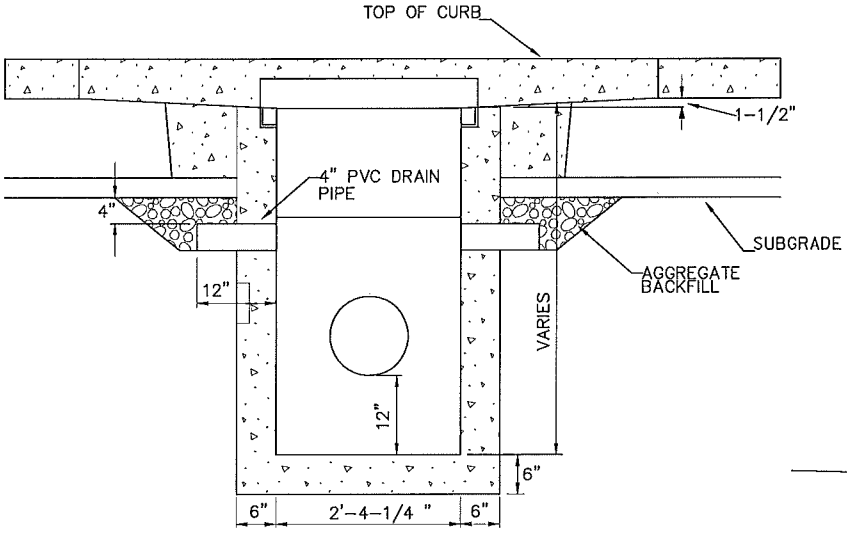

SECTION B-B

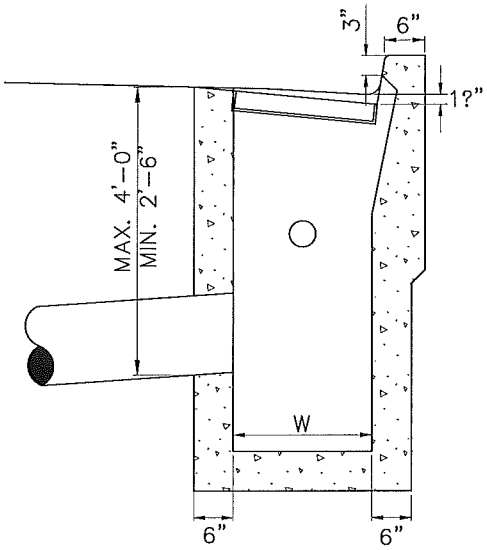

SECTION A-A

NOTES
1. CONCRETE SHALL HAVE A MINIMUM 28 DAY STRENGTH OF 3000 PSI.
2. CATCH BASIN TO BE CAST IN PLACE.
3. FRAME TO BE SET FLUSH WITH FACE OF CURB.

PELICAN CATCH BASIN IS THE STANDARD BASIN. THIS DESIGN REQUIRES PRIOR APPROVAL FROM CITY FOR USAGE.

City of Newberg
PUBLIC WORKS ENGINEERING DIVISION
414 E. FIRST STREET NEWBERG, OREGON 97132
PHONE 503-537-1240 - FAX 503-537-1277

REVISIONS:
11-30-2010

CATCH BASIN

SCALE: N.T.S.
DATE: May 2007
APPROVED BY: D,Danicic
STANDARD DRAWING 401

EXHIBIT "B" TO
RESOLUTION NO. 2011-2936

GRATE - TYPE 1

GRATE - TYPE 2

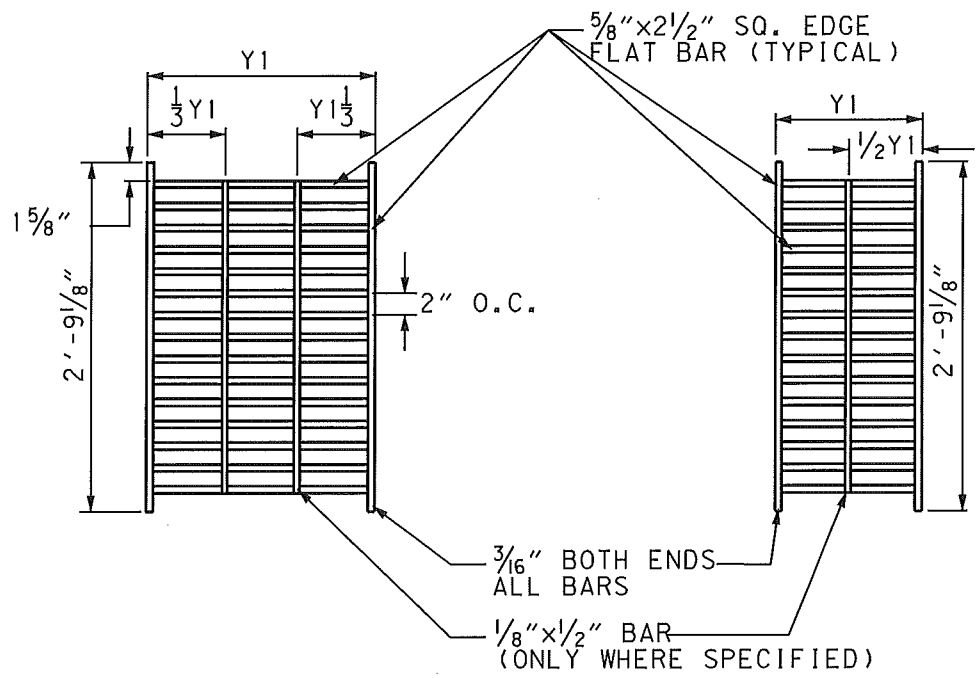

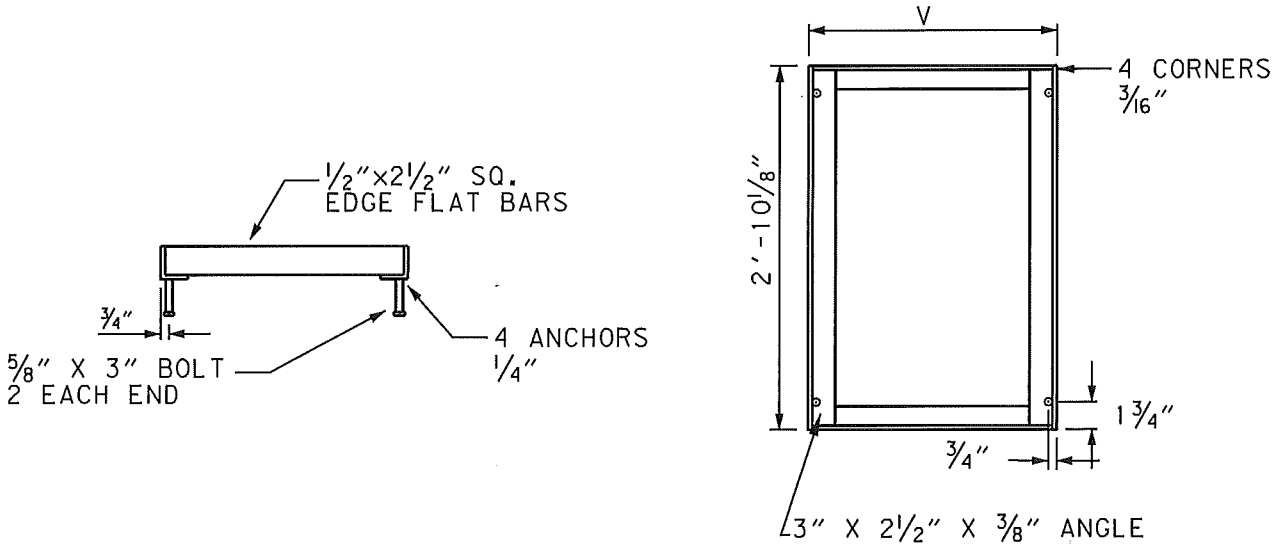

FRAME

NOTES
1. ALL MATERIAL TO BE A-36 STEEL.
2. CROSS BARS TO BE FLUSH WITH THE SURFACE AND MAY BE FILLET WELDED.

INLET TYPE	V	Y1	NO. OF BARS	TYPE	REMARKS
N-1, CN-1	2'-3 1/4"	2"-2 1/8"	17	1	
N-2, CN-2	2'-9 1/4"	1'-4"	17	2	2 GRATES

City of Newberg
PUBLIC WORKS ENGINEERING DIVISION
414 E. FIRST STREET NEWBERG, OREGON 97132

REVISIONS:

CATCH BASIN
FRAME AND GRATE

SCALE: N.T.S.
DATE: May 2007
APPROVED BY: D. Danicic
STANDARD DRAWING 402

EXHIBIT "B" TO
RESOLUTION NO. 2011-2936

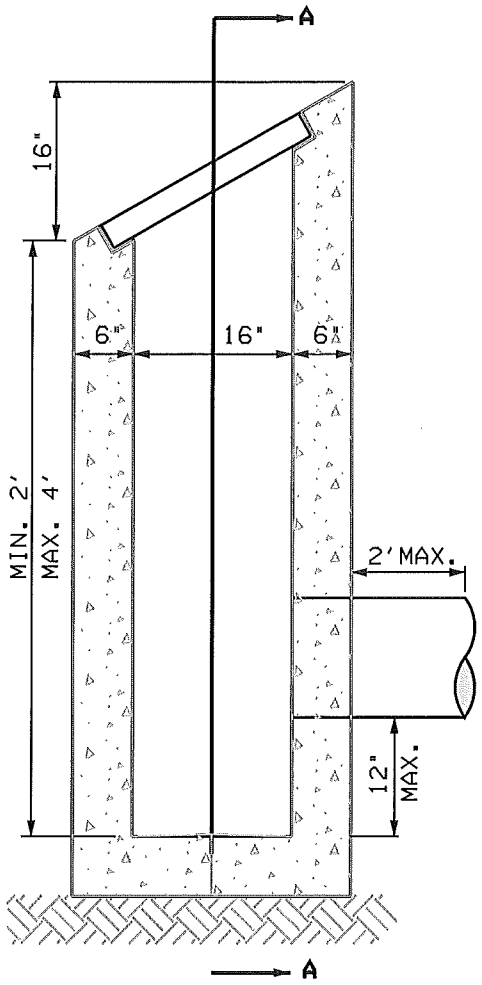

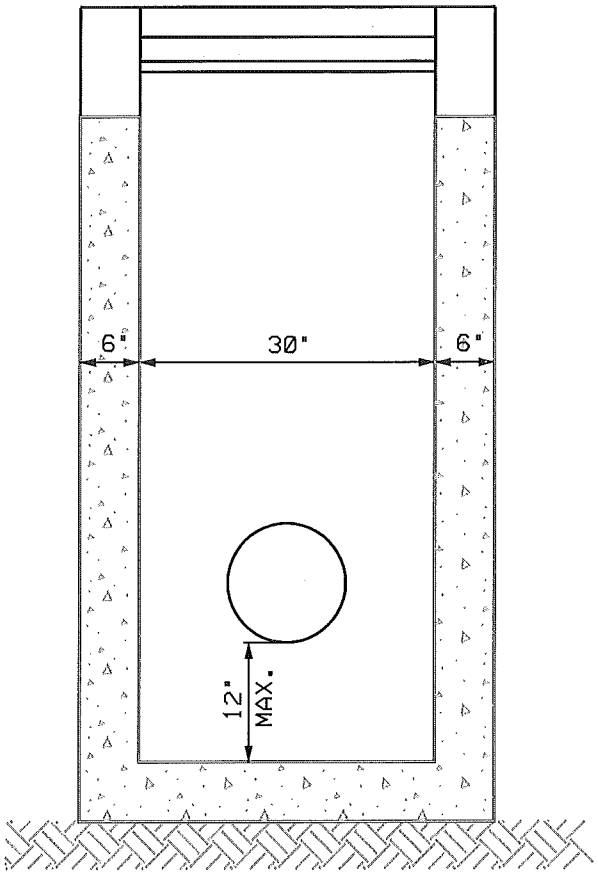

SECTION A-A

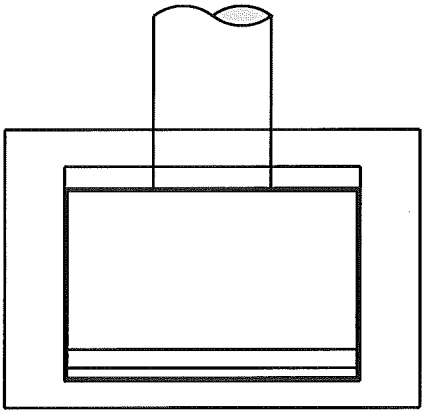

PLAN VIEW

NOTES:

1. CONCRETE SHALL HAVE MIN. STRENGTH OF 3000 PSI AT 28 DAYS.
2. SEE STANDARD DRAWING NO. 404 FOR FRAME AND GRATE

City of Newberg
PUBLIC WORKS ENGINEERING DIVISION
414 E. FIRST STREET NEWBERG, OREGON 97132

REVISIONS:

DITCH INTERCEPTOR
TYPE A

SCALE:	N.T.S.
DATE:	May 2007
APPROVED BY:	D. Danicic
STANDARD DRAWING	403

EXHIBIT "B" TO
RESOLUTION NO. 2011-2936

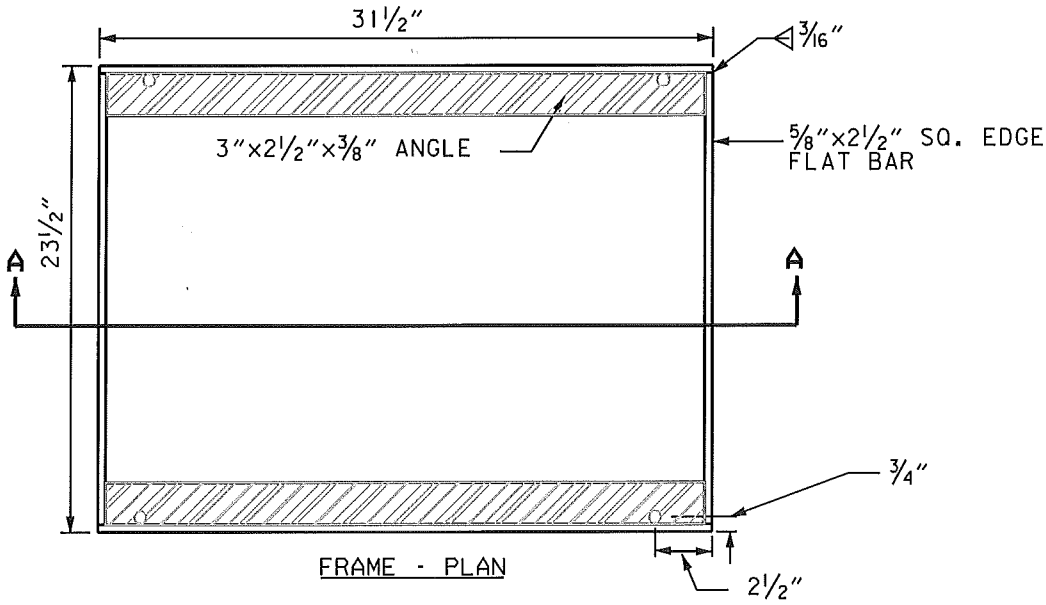

FRAME - PLAN

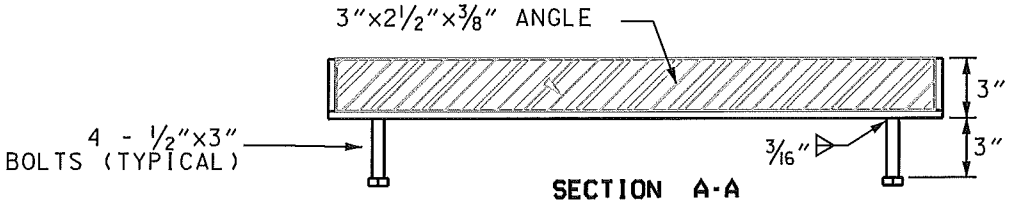

SECTION A-A

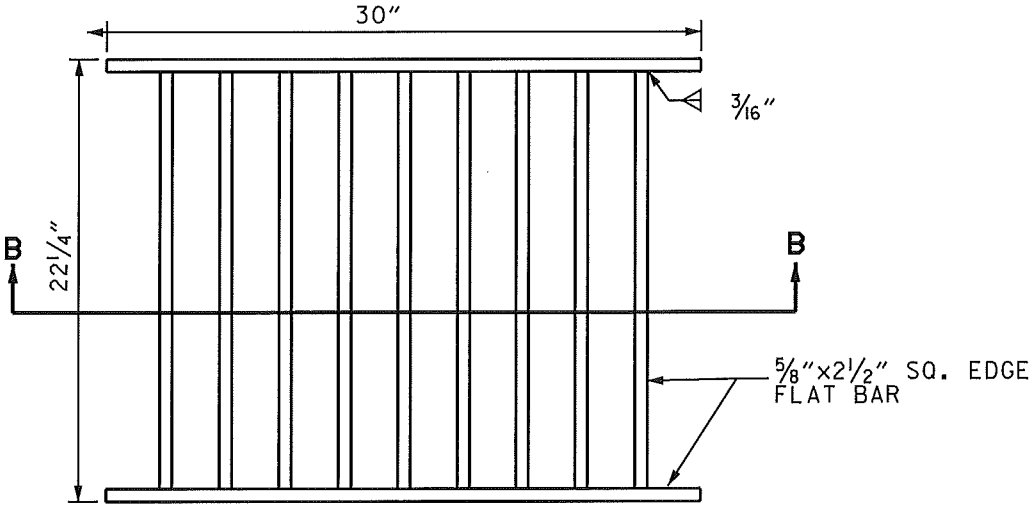

GRATE - PLAN

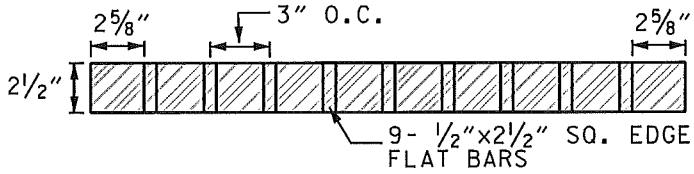

SECTION B-B

City of Newberg
PUBLIC WORKS ENGINEERING DIVISION
414 E. FIRST STREET NEWBERG, OREGON 97132

REVISIONS:

DITCH INTERCEPTOR FRAME AND GRATE TYPE A

SCALE:	N.T.S.
DATE:	May 2007
APPROVED BY:	D. Danicic
STANDARD DRAWING	404

EXHIBIT "B" TO
RESOLUTION NO. 2011-2936

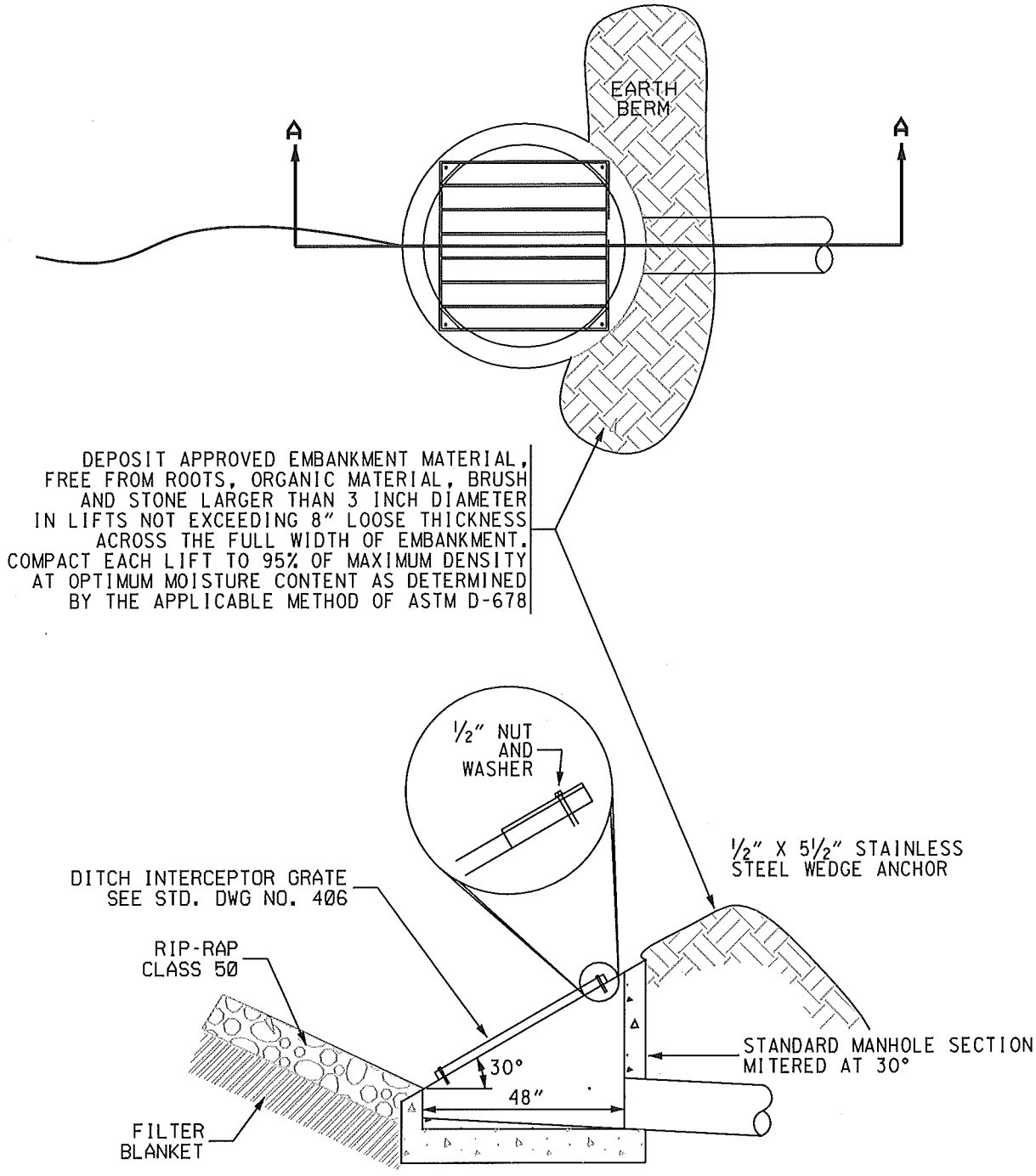

SECTION A-A

City of Newberg
PUBLIC WORKS ENGINEERING DIVISION
414 E. FIRST STREET NEWBERG, OREGON 97132

REVISIONS:

DITCH INTERCEPTOR TYPE "B"

SCALE:	N.T.S.
DATE:	May 2007
APPROVED BY:	D. Danicic
STANDARD DRAWING	405

EXHIBIT "B" TO
RESOLUTION NO. 2011-2936

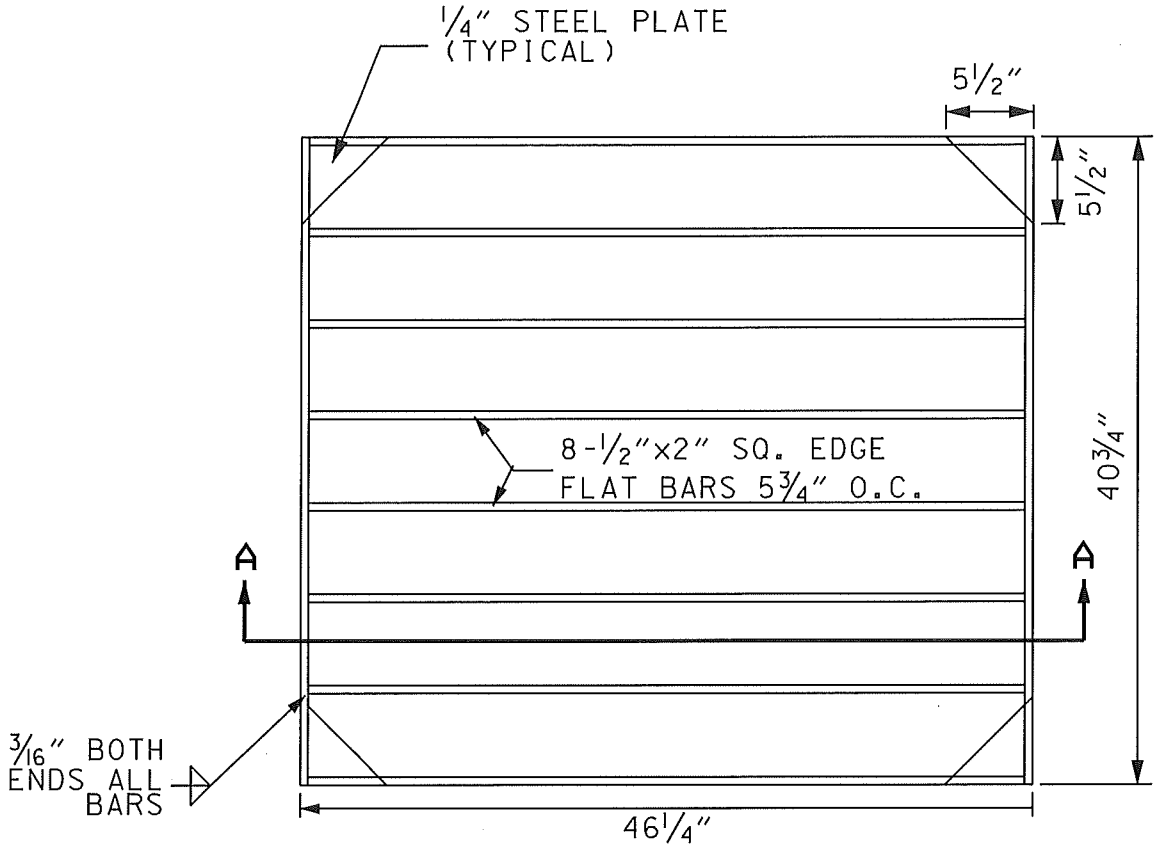

PLAN

MATERIAL TO BE NEW STRUCTURAL
STEEL, ASTM A-7, A-36 ØR A-373

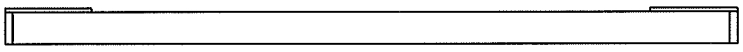

SECTION A-A

City of Newberg
PUBLIC WORKS ENGINEERING DIVISION
414 E. FIRST STREET NEWBERG, OREGON 97132

REVISIONS:

DITCH INTERCEPTOR
TYPE "B"
GRATE

SCALE:	N.T.S.
DATE:	May 2007
APPROVED BY:	D. Danicic
STANDARD DRAWING	406

EXHIBIT "B" TO
RESOLUTION NO. 2011-2936

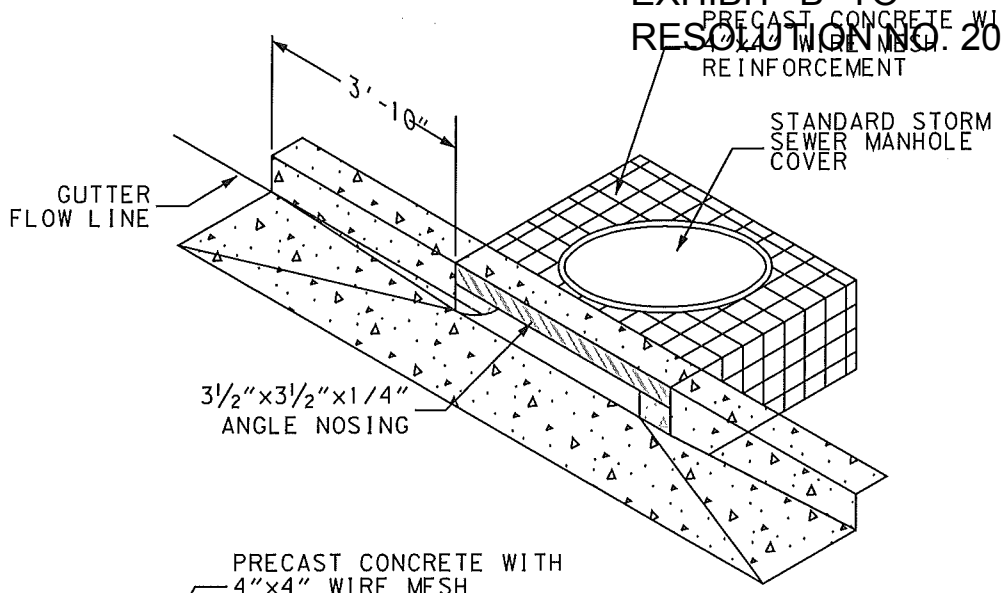

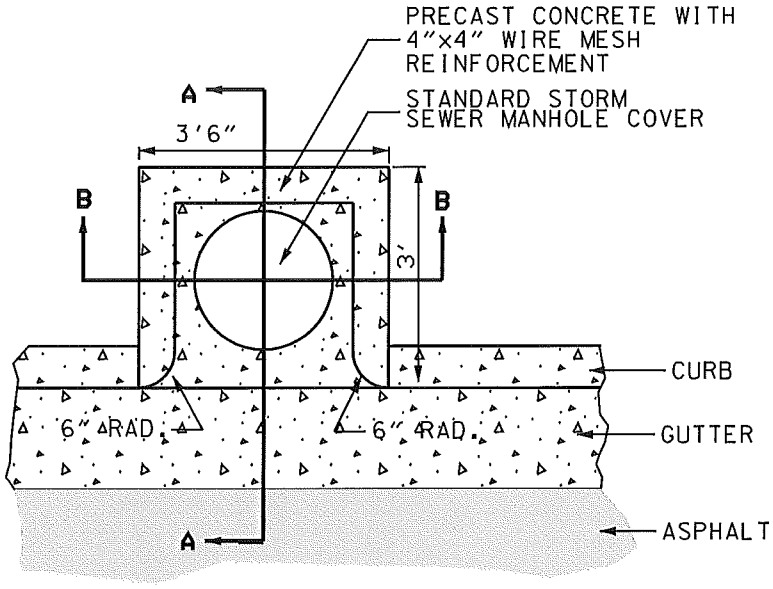

NOTES:

ALL METAL PARTS SHALL BE HOT DIPPED GALVANIZED AFTER FABRICATION.

TOP AND COVER SHALL BE REINFORCED WITH 4" X 4" #6 WIRE MESH REINFORCING.

CONCRETE SHALL ATTAIN A STRENGTH OF 3000 PSI AT 28 DAYS

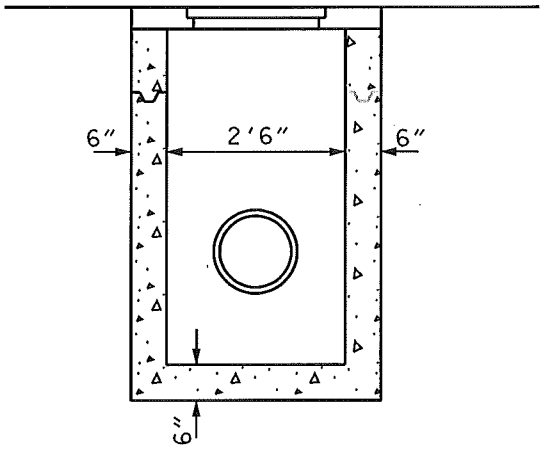

BASE SECTION
BASE MAY BE PRE-CAST OR CAST IN PLACE
SECTION B-B

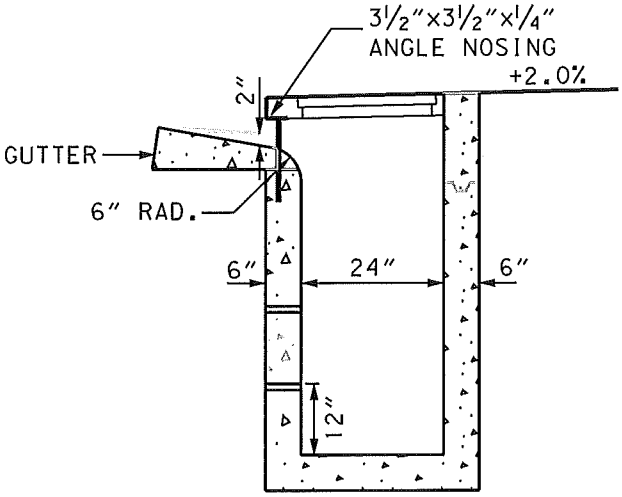

BASE SECTION
BASE MAY BE PRE-CAST OR CAST IN PLACE
SECTION A-A

City of Newberg
PUBLIC WORKS ENGINEERING DIVISION
414 E. FIRST STREET NEWBERG, OREGON 97132

REVISIONS:

PELICAN CATCH BASIN

SCALE:	N.T.S.
DATE:	May 2007
APPROVED BY:	D. Danicic
STANDARD DRAWING	407

EXHIBIT "B" TO
RESOLUTION NO. 2011-2936

GRATE

ESTIMATED WEIGHT OF GRATE: 64 LBS
OPEN AREA 170 SQ. IN.

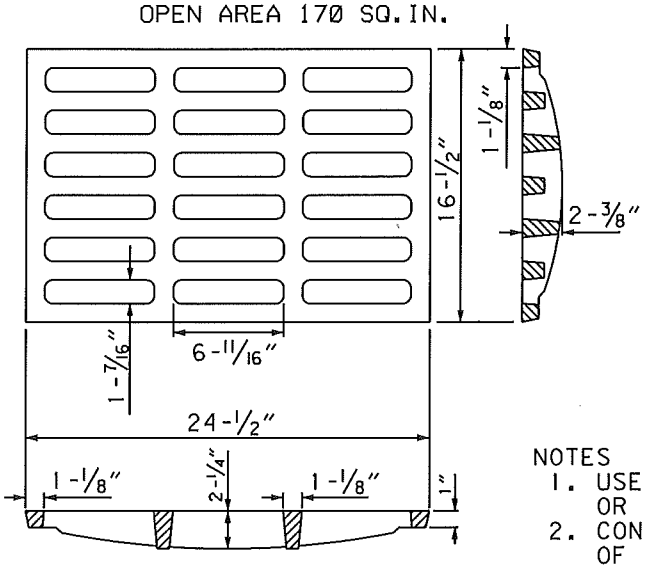

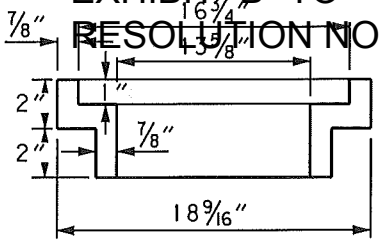

FRAME WIDTH

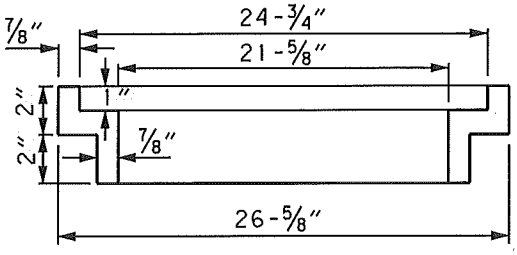

FRAME LENGTH

NOTES
1. USE EAST JORDAN IRON WORKS CATCH BASIN #307 OR EQUIVALENT.
2. CONCRETE SHALL HAVE A MINIMUM 28 DAY STRENGTH OF 3000 PSI.
3. CATCH BASIN TO BE CAST IN PLACE.

PLAN

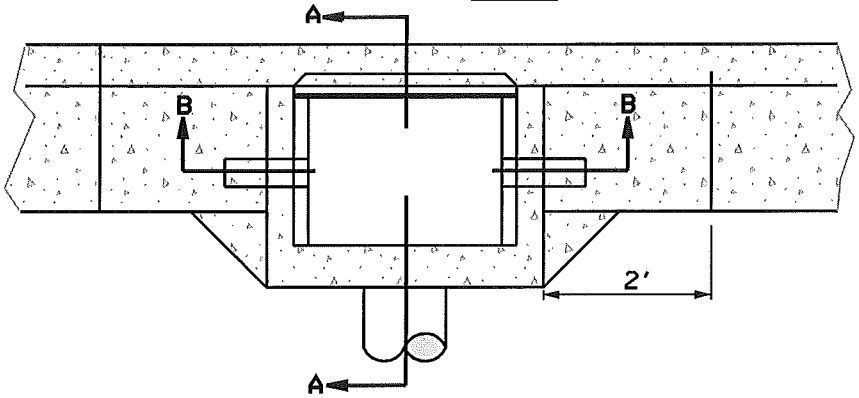

CURB OPENING

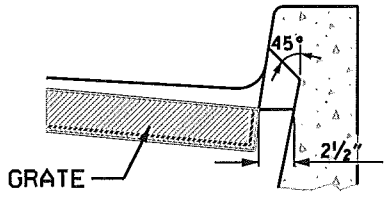

SECTION A-A

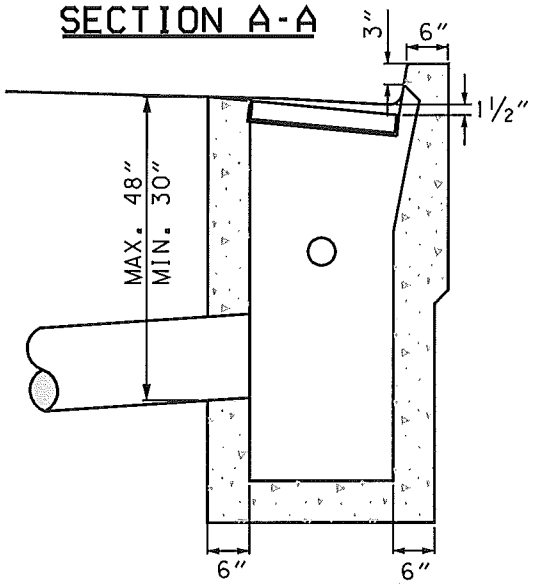

SECTION B-B

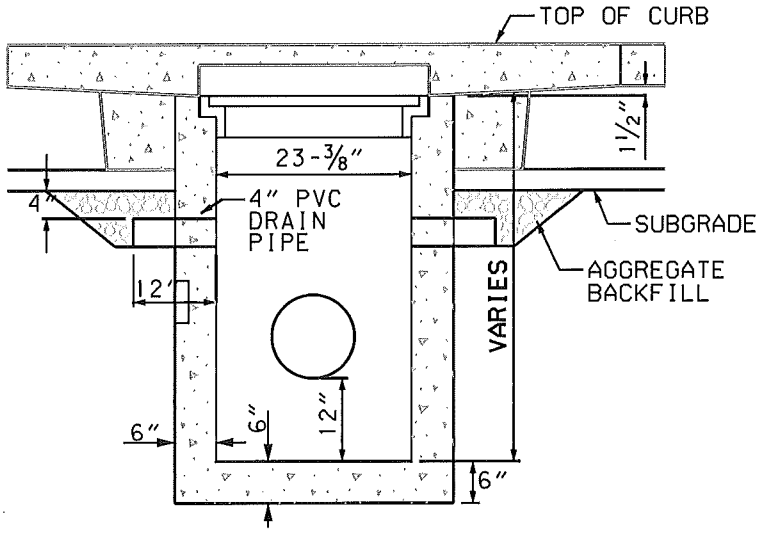

THIS CATCH BASIN SHALL BE USED ON A CASE BY CASE BASIS, AND REQUIRES PRIOR APPROVAL BY THE CITY OF NEWBERG.

City of Newberg
PUBLIC WORKS ENGINEERING DIVISION
414 E. FIRST STREET NEWBERG, OREGON 97132

REVISIONS:

ALTERNATE CATCH BASIN

SCALE:	N.T.S.
DATE:	May 2007
APPROVED BY:	D. Danicic
STANDARD DRAWING	408

EXHIBIT "B" TO
RESOLUTION NO. 2011-2936

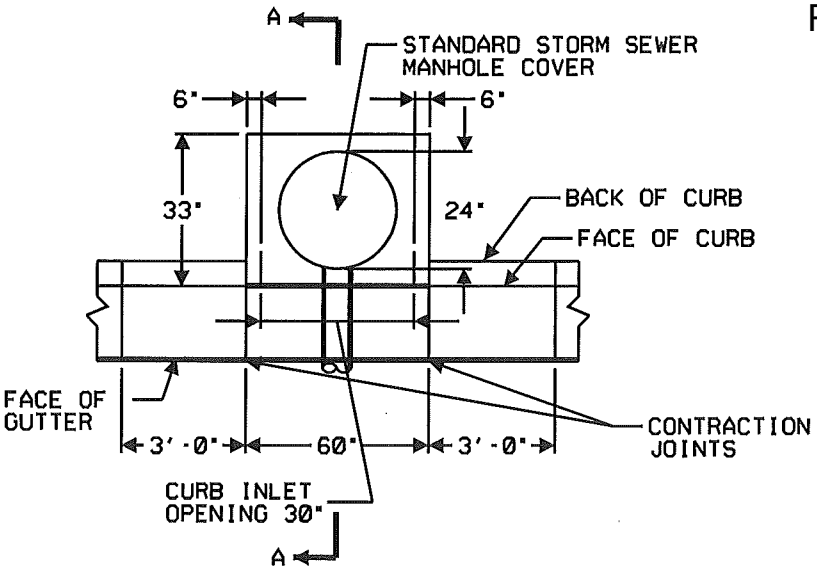

PLAN VIEW

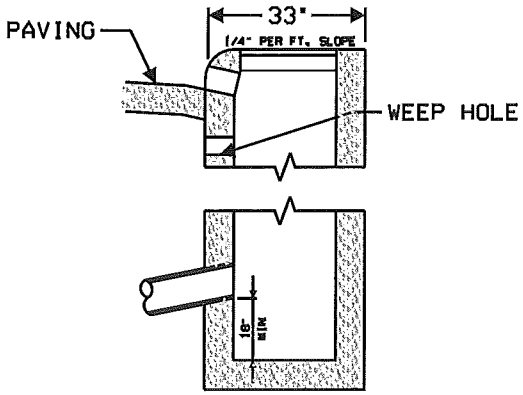

SECTION A-A

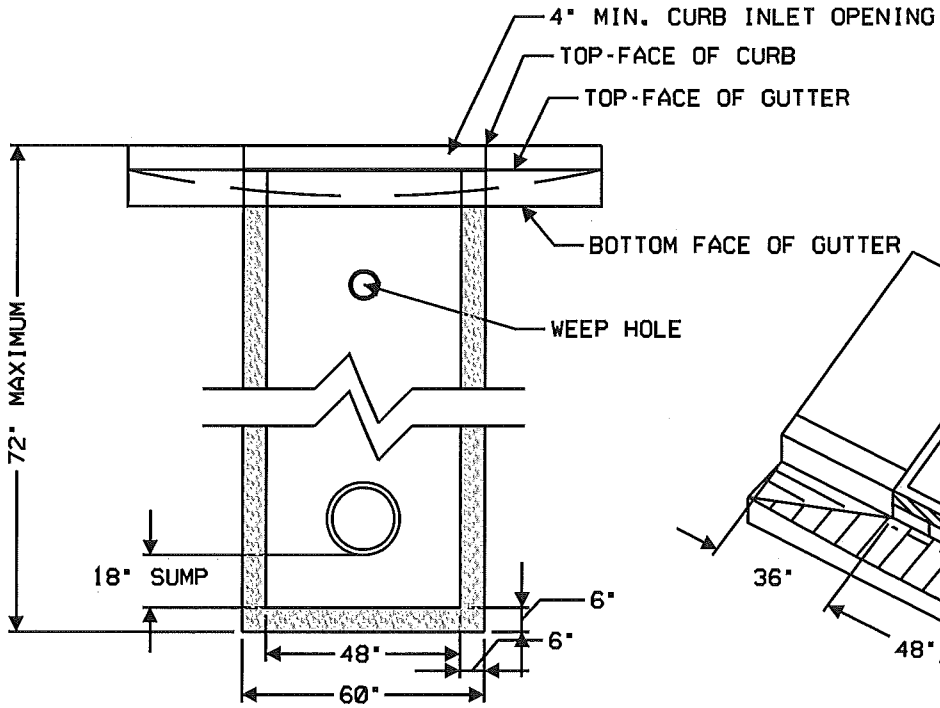

FRONT VIEW

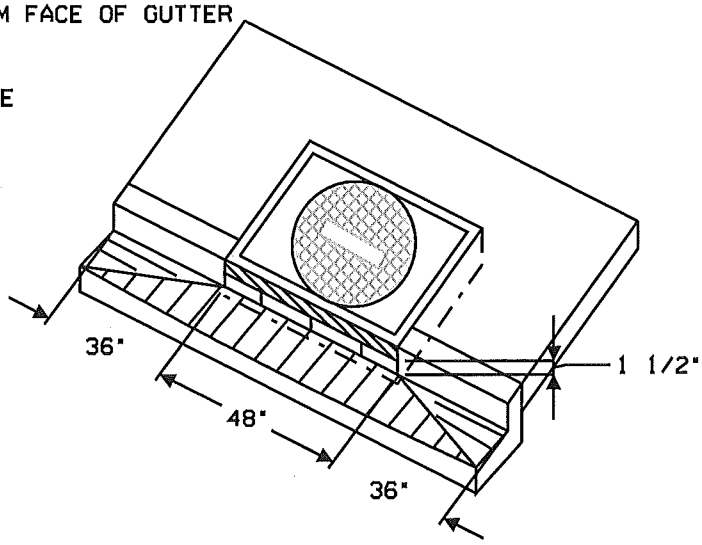

PERSPECTIVE VIEW SHOWING
DEPRESSED GUTTER AT CURB INLET

City of Newberg
PUBLIC WORKS ENGINEERING DIVISION
414 E. FIRST STREET NEWBERG, OREGON 97132

REVISIONS:

OVERSIZED PELICAN CATCH BASIN

SCALE:	N.T.S.
DATE:	May 2007
APPROVED BY:	D. Danicic
STANDARD DRAWING	409

EXHIBIT "B" TO
RESOLUTION NO. 2011-2936

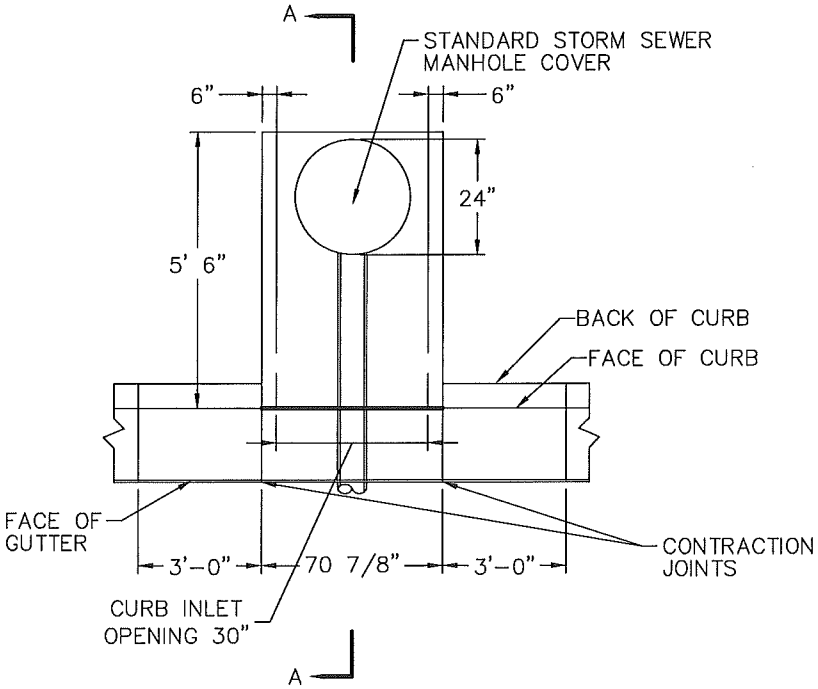

PLAN VIEW

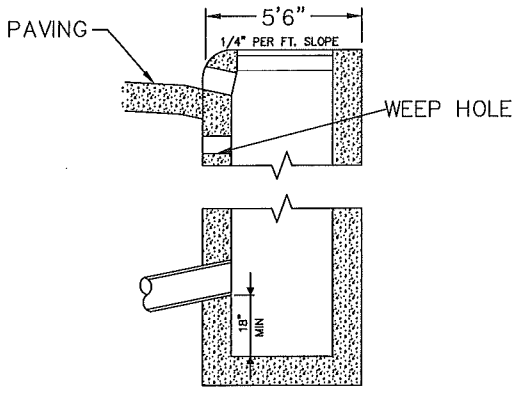

SECTION A–A

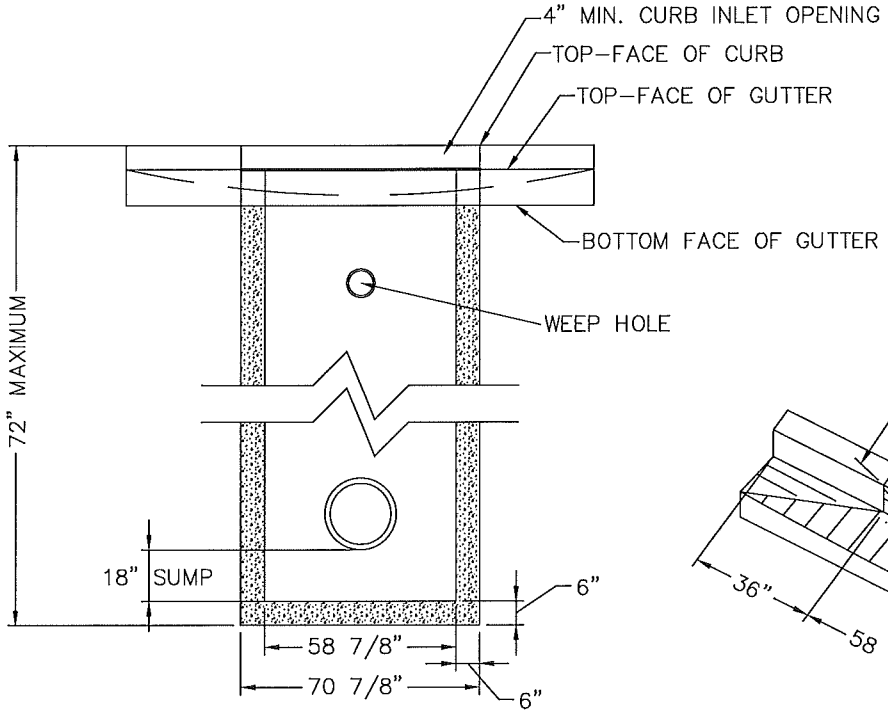

FRONT VIEW

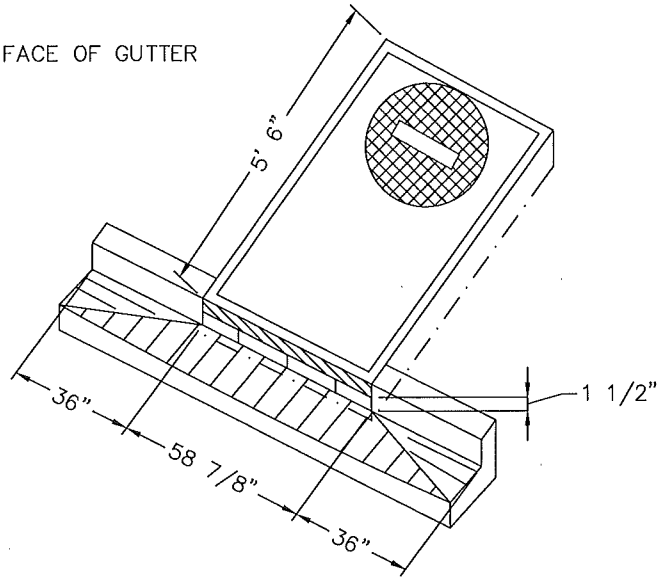

PERSPECTIVE VIEW SHOWING
DEPRESSED GUTTER AT CURB INLET

City of Newberg PUBLIC WORKS ENGINEERING DIVISION 414 E. FIRST STREET NEWBERG, OREGON 97132 PHONE 503-537-1240 - FAX 503-537-1277	REVISIONS:	SUPERSIZED PELICAN CATCH BASIN	SCALE: N.T.S. DATE: July 2009 APPROVED BY: P. Chiu STANDARD DRAWING 410

STORM

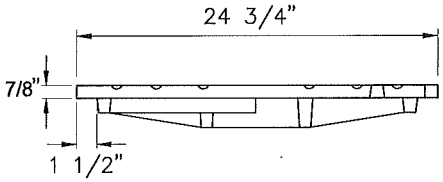

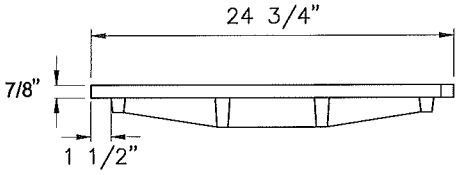

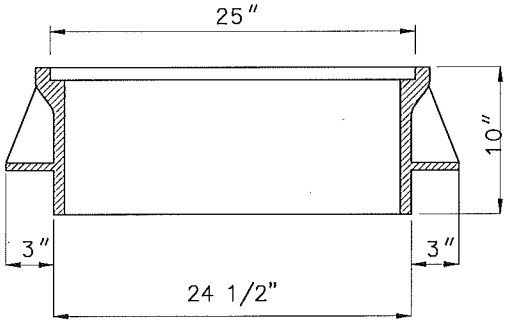

STANDARD FRAME

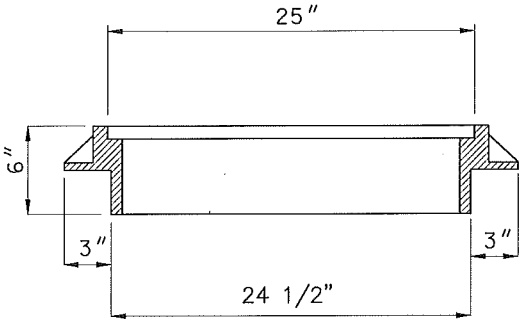

SUBURBAN FRAME

NOTES

1. USE SUBURBAN TYPE FRAME IN NON-TRAFFIC AREAS ONLY.
2. COVER AND FRAME SHALL BE CAST IRON, ASTM A-48 CLASS 30 AND MEET H-20 LOAD RATING.
3. COVER AND FRAME TO HAVE TRUE BEARING ALL AROUND.

City of Newberg
PUBLIC WORKS ENGINEERING DIVISION
414 E. FIRST STREET NEWBERG, OREGON 97132
PHONE 503-537-1240 - FAX 503-537-1277

REVISIONS:

STORM WATER MANHOLE FRAME AND COVER

SCALE:	N.T.S.
DATE:	SEPT 2010
APPROVED BY:	D. Danicic
STANDARD DRAWING	411

EXHIBIT "B" TO
RESOLUTION NO. 2011-2936

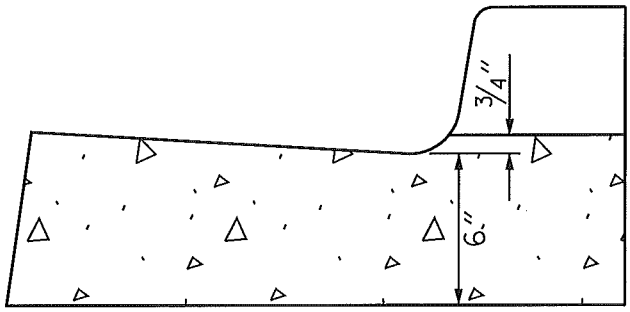

CURB AND GUTTER AT DRIVEWAY APPROACH

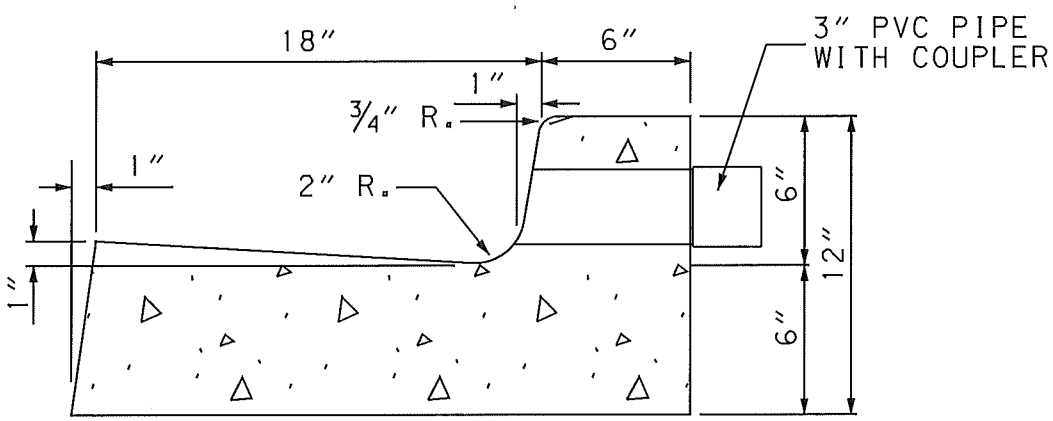

CURB AND GUTTER

NOTES

1. CONCRETE SHALL HAVE STRENGTH OF 3000 P.S.I. AT 28 DAYS.
2. TRANSVERSE CONTRACTION JOINTS - MAKE 1/8" X 1 1/2" DEEP CUT; SPACED AT 15'. PROVIDE CONTRACTION JOINTS AT CURB RETURN POINTS, CATCH BASINS AND DRIVEWAYS.
3. SCORE CURB OVER WEEP HOLE BLOCK OUT.
4. EXPANSION JOINTS SHALL NOT BE USED.
5. APPLY CURING COMPOUND (PETROLEUM BASED) TO FRESH CONCRETE TO RETAIN MOISTURE.
6. TOP OF CURB BRANDED WITH "S" OR "W", 2" MIN. HEIGHT FOR SEWER AND WATER LOCATIONS. HAND SCRIBING NOT ALLOWED.

City of Newberg PUBLIC WORKS ENGINEERING DIVISION 414 E. FIRST STREET NEWBERG, OREGON 97132	REVISIONS:	CURB AND GUTTER	SCALE: N.T.S. DATE: May 2007 APPROVED BY: D. Danicic STANDARD DRAWING 501

EXHIBIT "B" TO
RESOLUTION NO. 2011-2936

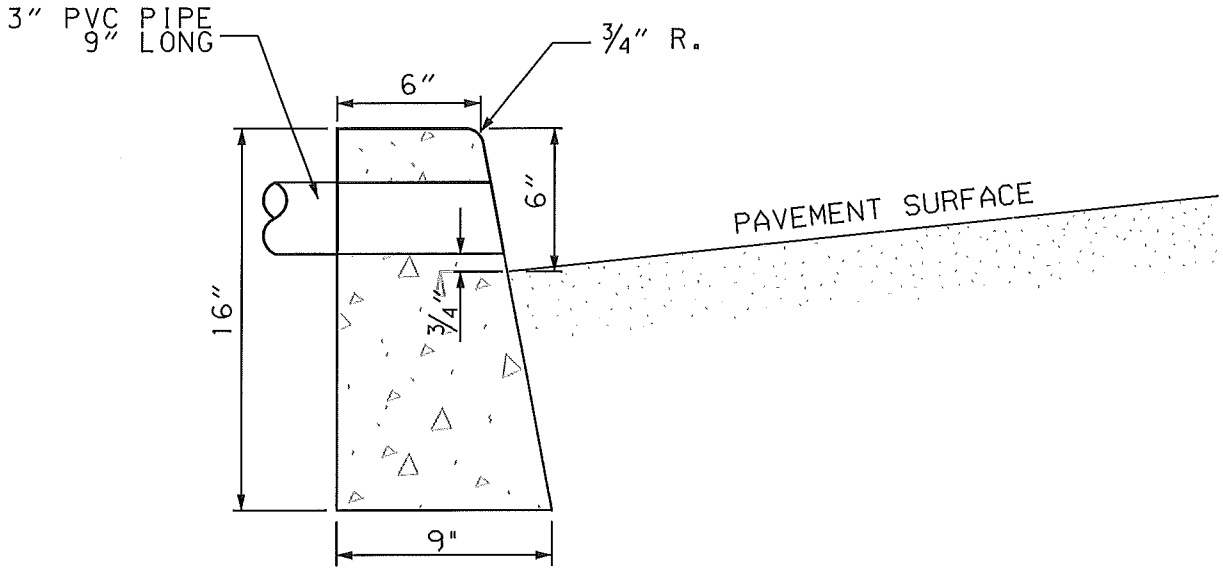

NOTES:

1. CONCRETE SHALL HAVE STRENGTH OF 3000 P.S.I. AT 28 DAYS.
2. TRANSVERSE CONTRACTION JOINTS -1/8"x1 1/2" DEEP CUT SPACED AT 15' INTERVALS.
3. THIS TYPE OF CURB TO BE USED ONLY WHERE SPECIFIED.
4. APPLY CURING COMPOUND (PETROLEUM BASE) TO FRESH CONCRETE TO RETAIN MOISTURE.

City of Newberg PUBLIC WORKS ENGINEERING DIVISION 414 E. FIRST STREET NEWBERG, OREGON 97132	REVISIONS:	CURB - TYPE "C"	SCALE: N.T.S. DATE: May 2007 APPROVED BY: D. Danicic STANDARD DRAWING 502

EXHIBIT "B" TO
RESOLUTION NO. 2011-2936

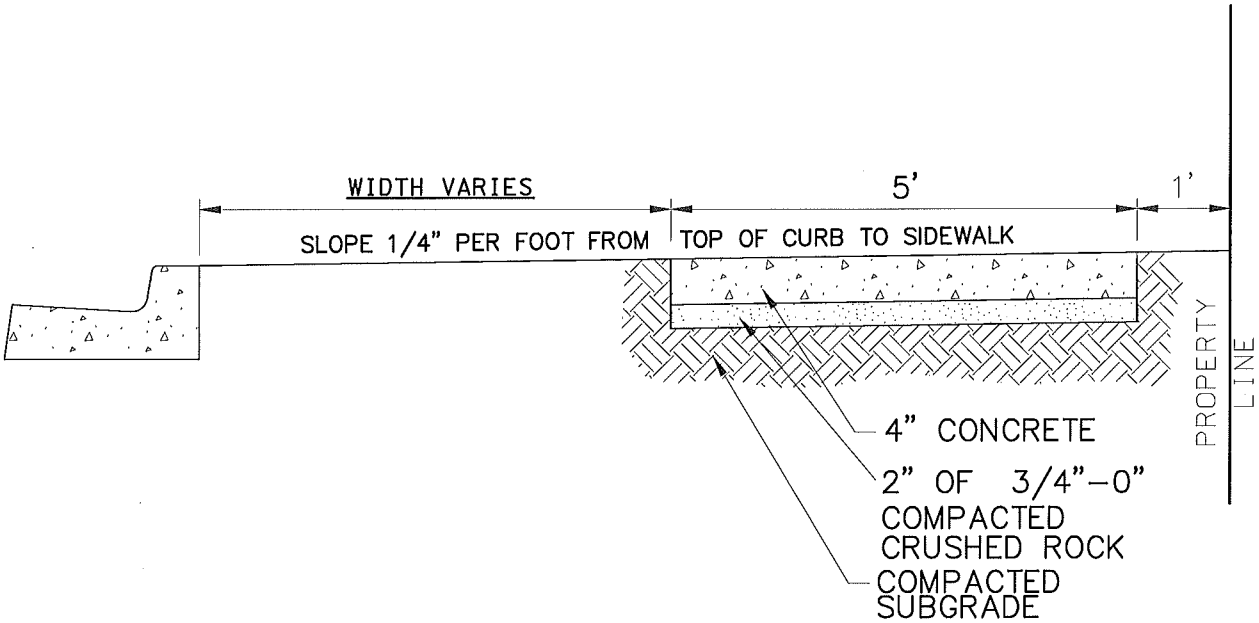

NOTES:

1. SLOPE FROM THE PROPERTY LINE TO THE STREET AT 2%.
2. WORK AGGREGATE INTO CONCRETE PRIOR TO FINISHING CONCRETE.
3. FINISHING DETAILS
   - EDGE CONCRETE WITH 3" EDGING TROWEL.
   - SCORE CONCRETE AT 5' INTERVALS.
   - INSTALL 1/8" X 1 1/2" CONTRACTION JOINTS EVERY 15'.
   - FABRIC TYPE EXPANSION JOINT NOT TO BE USED
   - APPLY LIGHT BROOM FINISH TRANSVERSE TO THE SIDEWALK.
4. CONCRETE SHALL HAVE STRENGTH OF 3000 P.S.I. AT 28 DAYS.
5. APPLY CURING COMPOUND (PETROLEUM BASE) TO FRESH CONCRETE TO RETAIN MOISTURE.
6. TOLERANCES
   - SURFACE SHALL NOT VARY MORE THAN 1/4" FROM A 10' STRAIGHT EDGE.
   - ALIGNMENT SHALL BE WITHIN 1/4" OF TRUE LINE.

City of Newberg
PUBLIC WORKS ENGINEERING DIVISION
414 E. FIRST STREET NEWBERG, OREGON 97132
PHONE 503-537-1240 - FAX 503-537-1277

REVISIONS:
Jan. 2010

SIDEWALK
TYPE "A"

SCALE: N.T.S.
DATE: JAN. 2010
APPROVED BY: P. Chu
STANDARD DRAWING 503

EXHIBIT "B" TO
RESOLUTION NO. 2011-2936

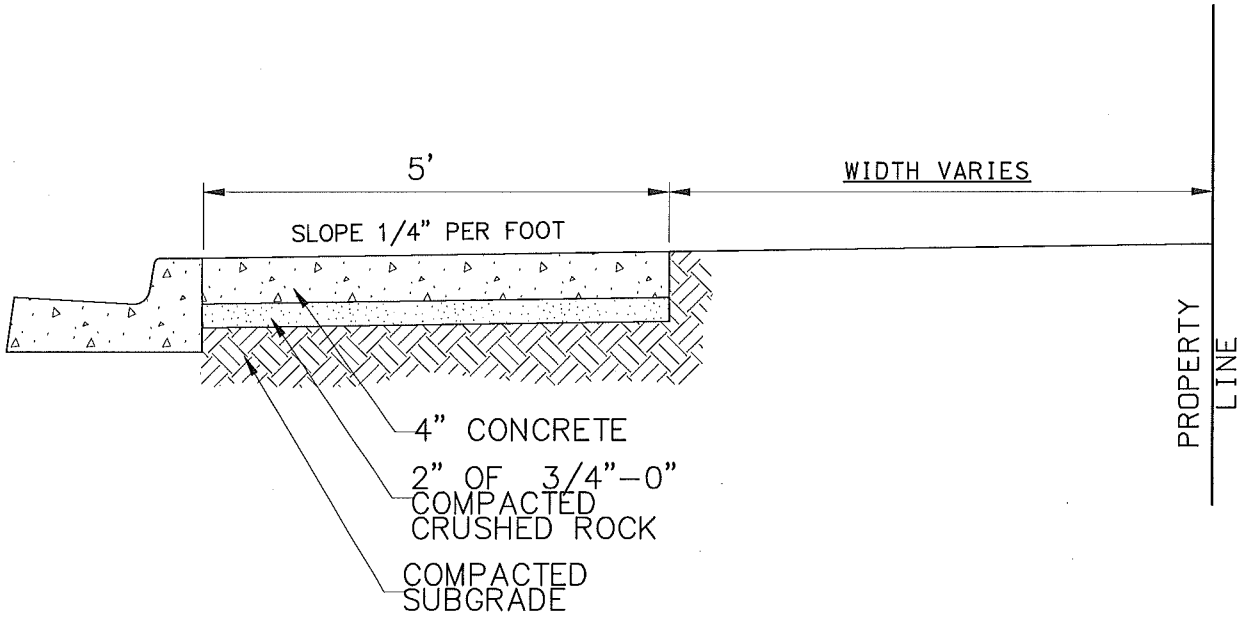

NOTES:

1. SLOPE FROM THE PROPERTY LINE TO THE STREET AT 2%.
2. WORK AGGREGATE INTO CONCRETE PRIOR TO FINISHING CONCRETE.
3. FINISHING DETAILS.
   - EDGE CONCRETE WITH 3" EDGING TROWEL.
   - SCORE CONCRETE AT 5' INTERVALS.
   - INSTALL 1/8"x1 1/2" CONTRACTION JOINTS EVERY 15'.
   - FABRIC TYPE EXPANSION JOINT NOT TO BE USED.
   - APPLY LIGHT BROOM FINISH TRANSVERSE TO THE SIDEWALK
4. CONCRETE SHALL HAVE STRENGTH OF 3000 P.S.I. AT 28 DAYS.
5. APPLY CURING COMPOUND (PETROLEUM BASE) TO FRESH CONCRETE TO RETAIN MOISTURE.
6. TOLERANCES
   - SURFACE SHALL NOT VARY MORE THAN 1/4" FROM A 10' STRAIGHT EDGE.
   - ALIGNMENT SHALL BE WITHIN 1/4" OF TRUE LINE.

City of Newberg
PUBLIC WORKS ENGINEERING DIVISION
414 E. FIRST STREET NEWBERG, OREGON 97132
PHONE 503-537-1240 - FAX 503-537-1277

REVISIONS:	SIDEWALK TYPE "B"	SCALE: N.T.S.
JAN. 2010		DATE: JAN. 2010
		APPROVED BY: P. CHIU
		STANDARD DRAWING 504

EXHIBIT "B" TO
RESOLUTION NO. 2011-2936

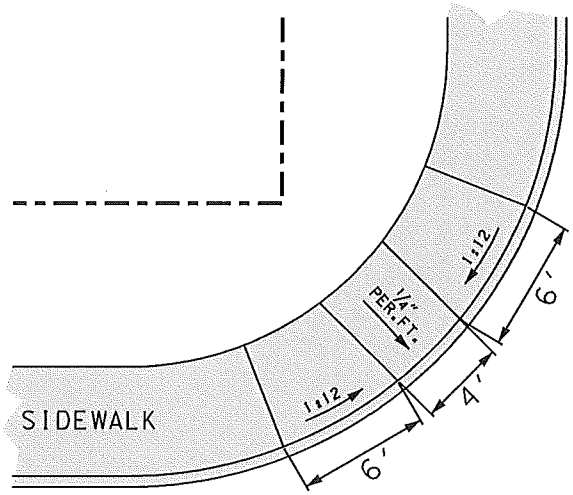

A

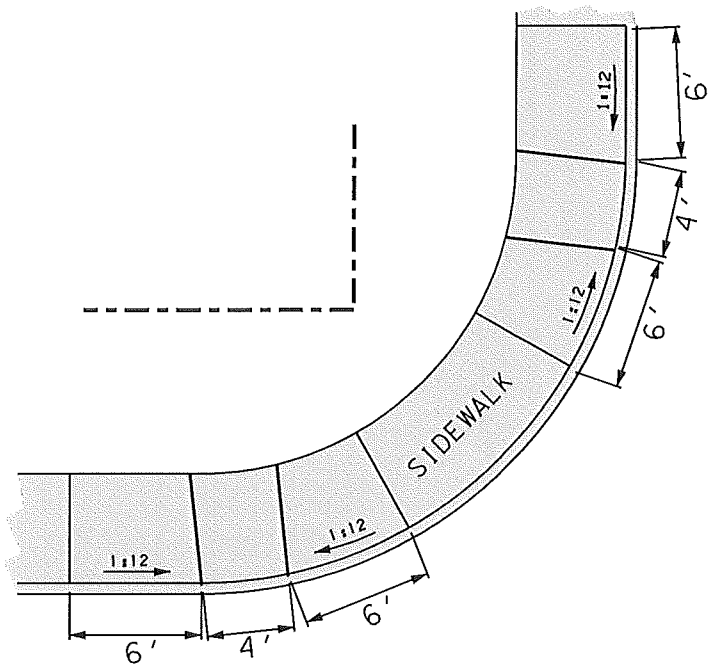

B

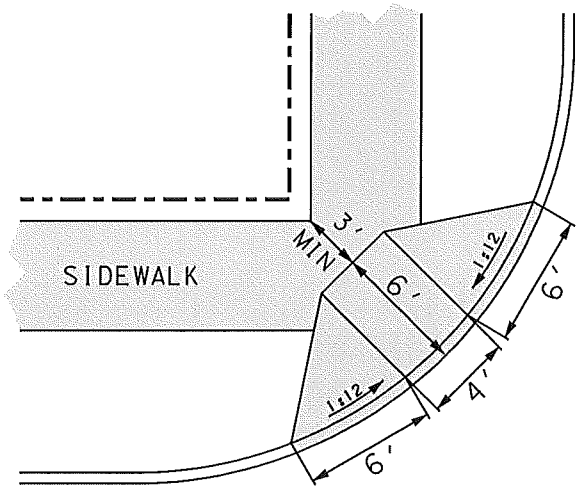

C

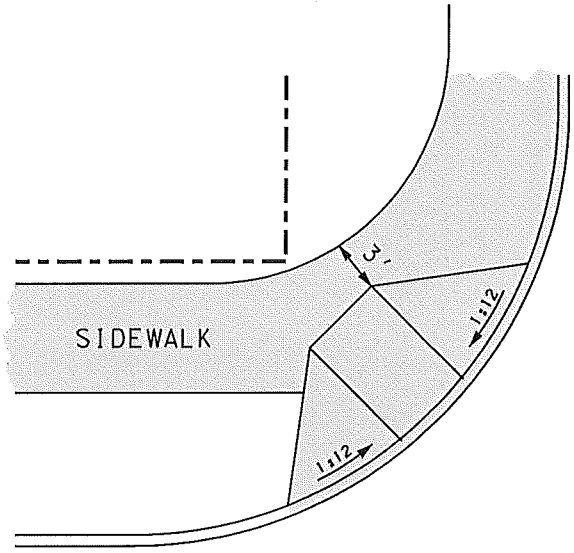

D

ALL CURB RAMP INSTALLATIONS REQUIRE DETECTIBLE/TACTILE WARNING MATS SEE STANDARD DRAWINGS 506&507.

City of Newberg
PUBLIC WORKS ENGINEERING DIVISION
414 E. FIRST STREET NEWBERG, OREGON 97132

REVISIONS:

CURB RAMP LOCATIONS

SCALE:	N.T.S.
DATE:	May 2007
APPROVED BY:	D. Danicic
STANDARD DRAWING	505

EXHIBIT "B" TO
RESOLUTION NO. 2011-2936

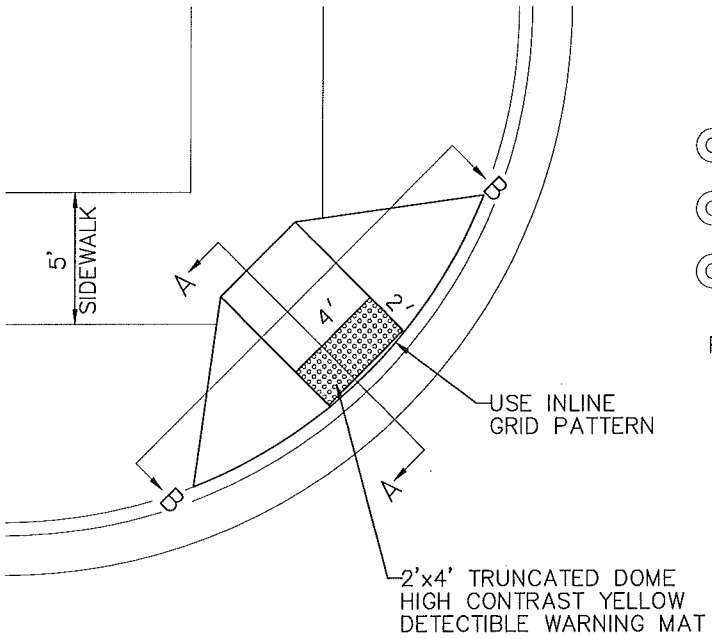

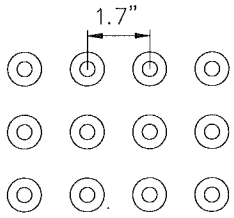

RAMP TEXTURE
PATTERN DETAIL

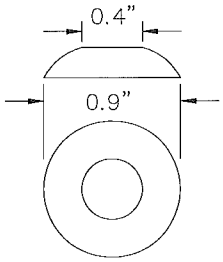

TRUNCATED
DOME DETAIL

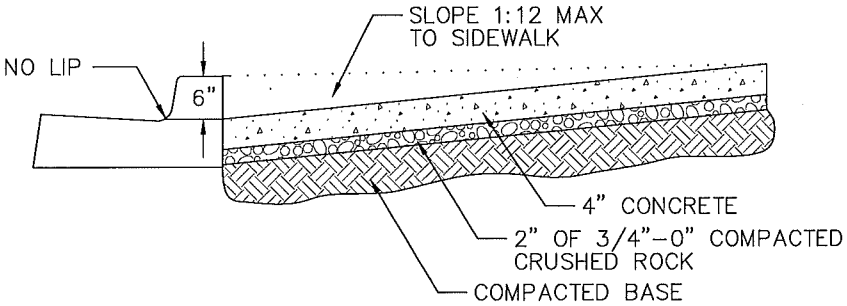

SECTION A–A

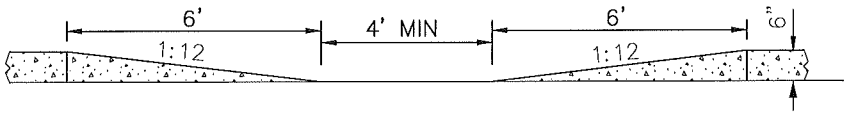

SECTION B–B

NOTES:

1. CONCRETE SHALL HAVE STRENGTH OF 3000 P.S.I. AT 28 DAYS.
2. SIDEWALK RAMPS ARE REQUIRED AT ALL NEW INTERSECTIONS.
3. REPLACEMENT CURBS MUST BE POURED AGAINST A VERTICAL EDGE OF EXISTING CURB.
4. CONCRETE IN A REPLACEMENT CURB SHALL NOT PROTRUDE PAST THE FACE OF THE CURB IN THE ASPHALT REPLACEMENT AREA.
5. HORIZONTAL AND VERTICAL ALIGNMENT SHALL BE WITHIN 1/8" IN 10'.
6. DETECTIBLE SURFACE SHALL BE CONSTRUCTED WITH PREFABRICATED UNITS. TEXTURE SHALL NOT BE WET IMPRINTED. TRUCNACTED DOME PATTERN SHALL BE INLINE, ALIGNED IN THE DIRECTION OF THE RAMP.
7. DETECTIBLE SURFACE SHALL BE YELLOW (FEDERAL COLOR #33538).
8. THIS DETAIL IS APPROVED FOR USE IN THE PUBLIC RIGHT OF WAY ONLY.

City of Newberg PUBLIC WORKS ENGINEERING DIVISION 414 E. FIRST STREET NEWBERG, OREGON 97132 PHONE 503-537-1240 - FAX 503-537-1277	REVISIONS: 4–6–2010	SIDEWALK RAMP TYPE "A" SIDEWALK	SCALE: N.T.S. DATE: May 2007 APPROVED BY: D. Danicic STANDARD DRAWING 506

EXHIBIT "B" TO
RESOLUTION NO. 2011-2936

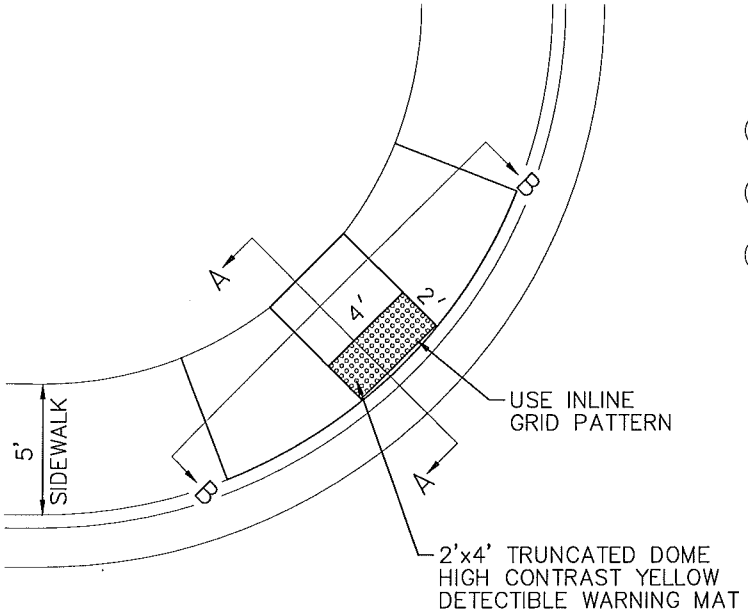

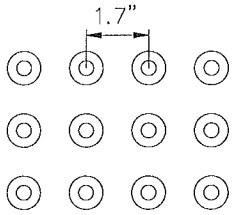

RAMP TEXTURE
PATTERN DETAIL

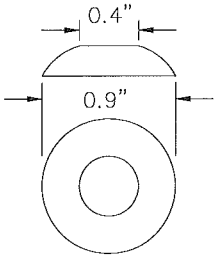

TRUNCATED
DOME DETAIL

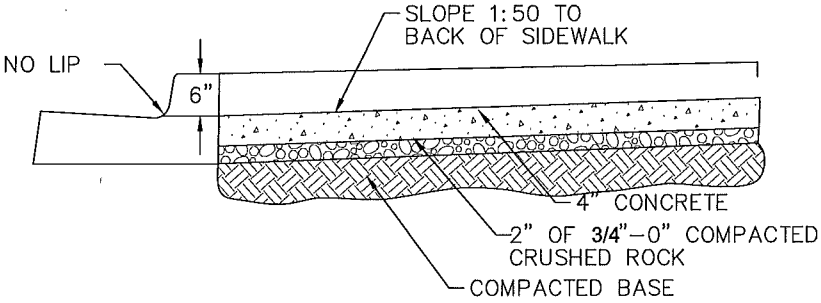

SECTION A-A

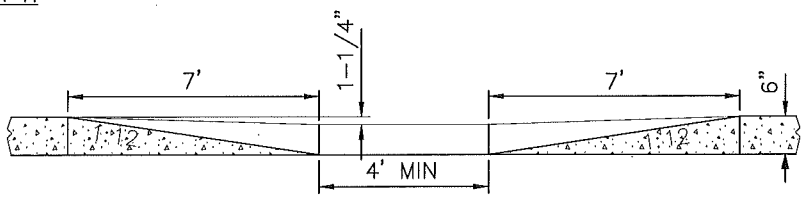

SECTION B-B

NOTES:

1. CONCRETE SHALL HAVE STRENGTH OF 3000 P.S.I. AT 28 DAYS.
2. SIDEWALK RAMPS ARE REQUIRED AT ALL NEW INTERSECTIONS.
3. REPLACEMENT CURBS MUST BE POURED AGAINST A VERTICAL EDGE OF EXISTING CURB.
4. CONCRETE IN A REPLACEMENT CURB SHALL NOT PROTRUDE PAST THE FACE OF THE CURB IN THE ASPHALT REPLACEMENT AREA.
5. HORIZONTAL AND VERTICAL ALIGNMENT SHALL BE WITHIN 1/8" IN 10'.
6. DETECTIBLE SURFACE SHALL BE CONSTRUCTED WITH PREFABRICATED UNITS. TEXTURE SHALL NOT BE WET IMPRINTED. TRUCNACTED DOME PATTERN SHALL BE INLINE, ALIGNED IN THE DIRECTION OF THE RAMP.
7. DETECTIBLE SURFACE SHALL BE YELLOW (FEDERAL COLOR #33538).
8. THIS DETAIL IS APPROVED FOR USE IN THE PUBLIC RIGHT OF WAY ONLY.

City of Newberg PUBLIC WORKS ENGINEERING DIVISION 414 E. FIRST STREET NEWBERG, OREGON 97132 PHONE 503-537-1240 - FAX 503-537-1277	REVISIONS: 4-8-2010	SIDEWALK RAMP TYPE "B" SIDEWALK	SCALE: N.T.S. DATE: May 2007 APPROVED BY: D. Danicic STANDARD DRAWING 507

EXHIBIT "B" TO
RESOLUTION NO. 2011-2936

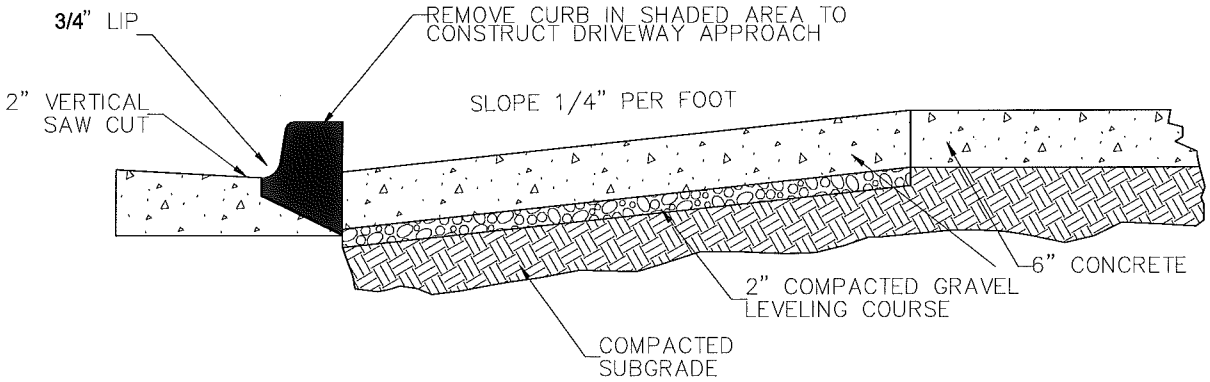

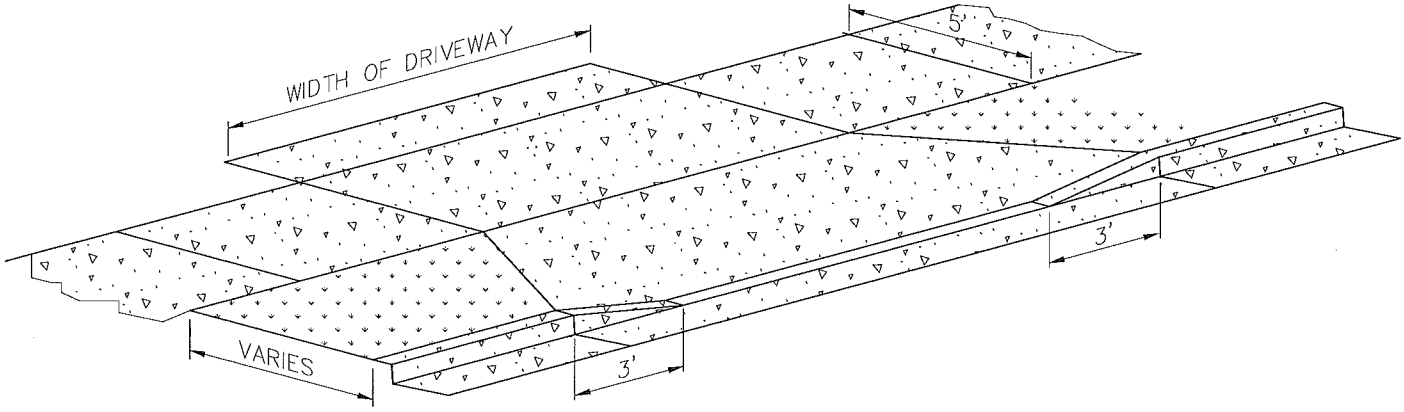

NOTES

1. CONCRETE SHALL HAVE STRENGTH OF 3000 P.S.I. AT 28 DAYS.
2. LIMITS OF DRIVEWAY SHALL BE SAW CUT.
3. APPLY A LIGHT BROOM FINISH TRANSVERSE TO THE SIDEWALK.
4. CURB AND APPROACH SHALL BE POURED MONOLITHICALLY.
5. IF WIDTH IS GREATER THAN 15 FEET, INSTALL CONTRACTION JOINT IN CENTER OF THE DRIVEWAY.
6. FABRIC EXPANSION JOINT SHALL NOT BE USED.
7. WORK AGGREGATE INTO CONCRETE PRIOR TO FINISHING CONCRETE.
8. APPLY CURING COMPOUND TO FRESH CONCRETE TO RETAIN MOISTURE.
9. MINIMUM DRIVEWAY WIDTH OF 12' AND MAXIMUM WIDTH OF 24' 3 CAR GARAGE MAXIMUM WIDTH OF 28''

City of Newberg PUBLIC WORKS ENGINEERING DIVISION 414 E. FIRST STREET NEWBERG, OREGON 97132 PHONE 503-537-1240 - FAX 503-537-1277	REVISIONS: 4-8-2010	DRIVEWAY APRON CURB CUT TYPE "A" SIDEWALK	SCALE: N.T.S. DATE: May 2007 APPROVED BY: D. Danicic STANDARD DRAWING 508

EXHIBIT "B" TO
RESOLUTION NO. 2011-2936

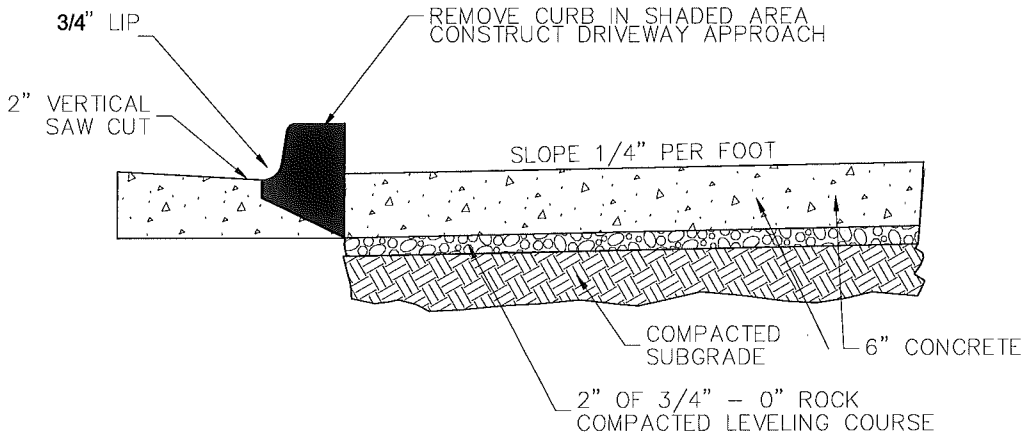

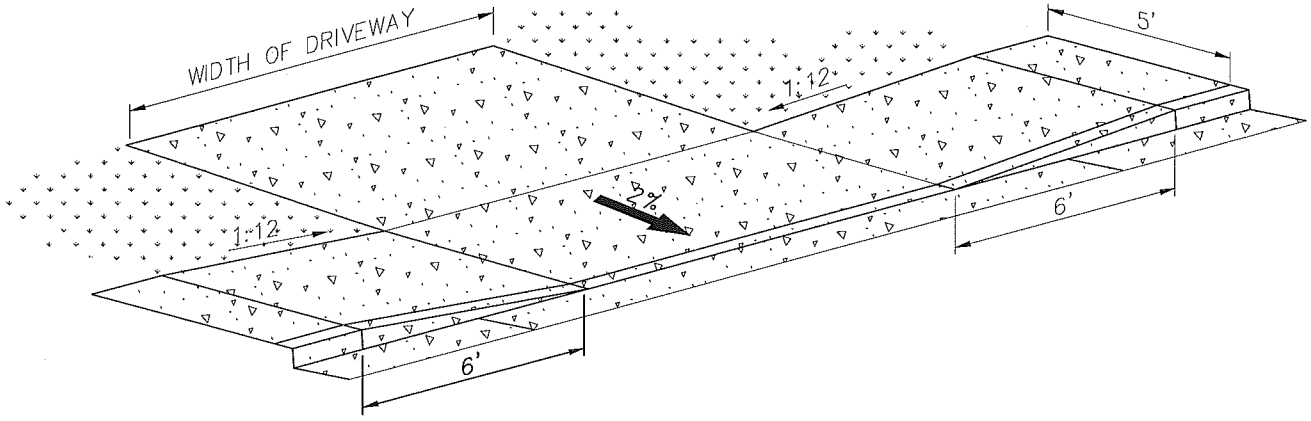

NOTES:
1. CONCRETE SHALL HAVE STRENGTH OF 3000 P.S.I. AT 28 DAYS.
2. LIMITS OF DRIVEWAY SHALL BE SAW CUT.
3. APPLY LIGHT BROOM FINISH TRANSVERSE TO THE SIDEWALK.
4. CURB AND APPROACH SHALL BE POURED MONOLITHICALLY.
5. IF WIDTH IS GREATER THAN 15 FEET, INSTALL CONTRACTION JOINT IN CENTER OF THE DRIVEWAY.
6. FABRIC EXPANSION JOINT SHALL NOT BE USED.
7. WORK AGGREGATE INTO CONCRETE PRIOR TO FINISHING CONCRETE.
8. APPLY CURING COMPOUND TO FRESH CONCRETE TO RETAIN MOISTURE.
9. MINIMUM DRIVEWAY WIDTH OF 12' AND MAXIMUM WIDTH OF 24'
   3 CAR GARAGE MAXIMUM WIDTH OF 28'

City of Newberg PUBLIC WORKS ENGINEERING DIVISION 414 E. FIRST STREET NEWBERG, OREGON 97132 PHONE 503-537-1240 - FAX 503-537-1277	REVISIONS: 4-8-2010	DRIVEWAY APRON CURB CUT TYPE "B" SIDEWALK	SCALE: N.T.S. DATE: May 2007 APPROVED BY: D. Danicic STANDARD DRAWING 509

EXHIBIT "B" TO
RESOLUTION NO. 2011-2936

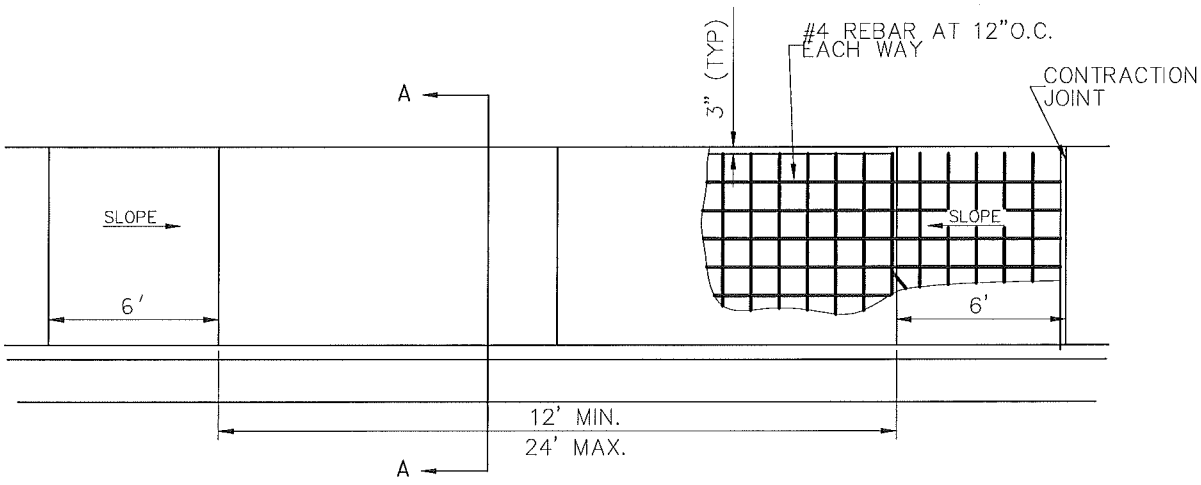

PLAN

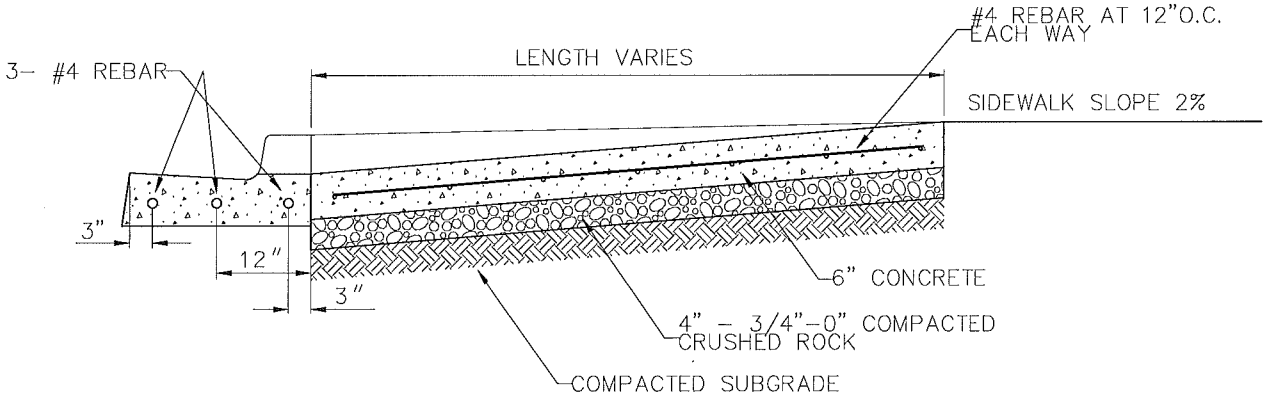

SECTION A-A

NOTES
1. SEE STANDARD DRAWING 501 & 509 FOR ADDITIONAL DETAILS.

City of Newberg PUBLIC WORKS ENGINEERING DIVISION 414 E. FIRST STREET NEWBERG, OREGON 97132 PHONE 503-537-1240 - FAX 503-537-1277	REVISIONS: Jan 2011	COMMERCIAL DRIVEWAY	SCALE: N.T.S. DATE: May 2007 APPROVED BY: D,Danicic STANDARD DRAWING 510

EXHIBIT "B" TO
RESOLUTION NO. 2011-2936

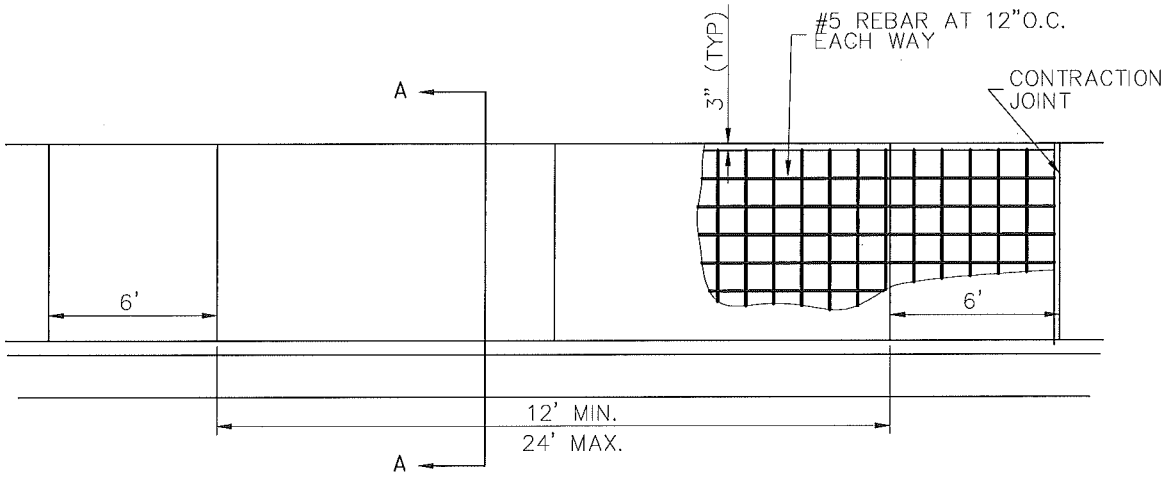

PLAN

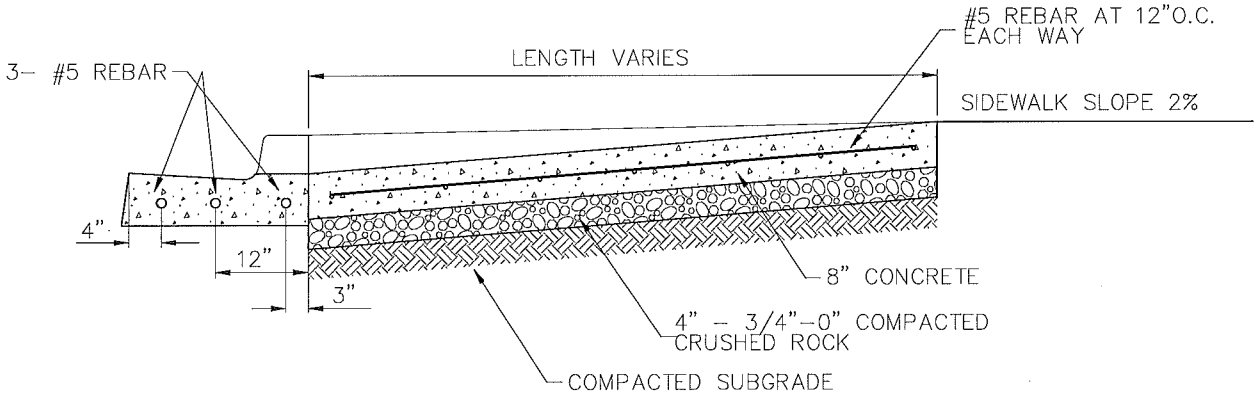

SECTION A-A

NOTES
1. SEE STANDARD DRAWING 501 AND 509 FOR ADDITIONAL DETAILS.

City of Newberg PUBLIC WORKS ENGINEERING DIVISION 414 E. FIRST STREET NEWBERG, OREGON 97132 PHONE 503-537-1240 - FAX 503-537-1277	REVISIONS:	INDUSTRIAL DRIVEWAY	SCALE: N.T.S. DATE: May 2007 APPROVED BY: D. Danicic STANDARD DRAWING 511

EXHIBIT "B" TO
RESOLUTION NO. 2011-2936

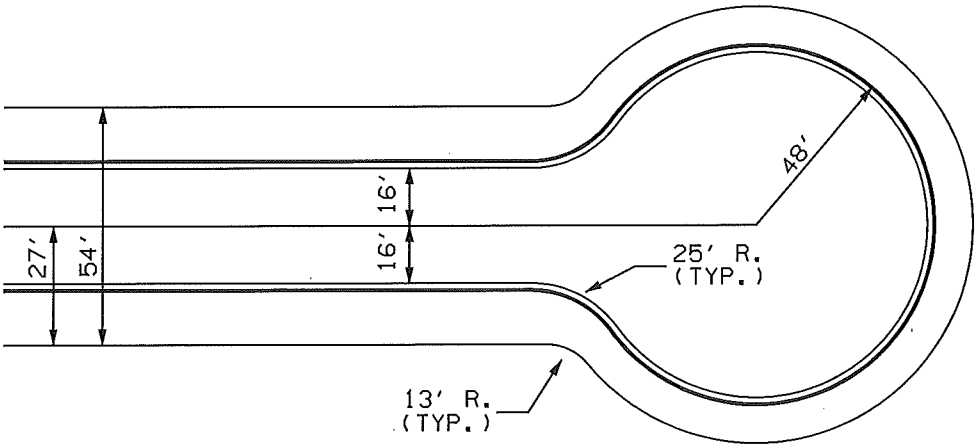

STANDARD

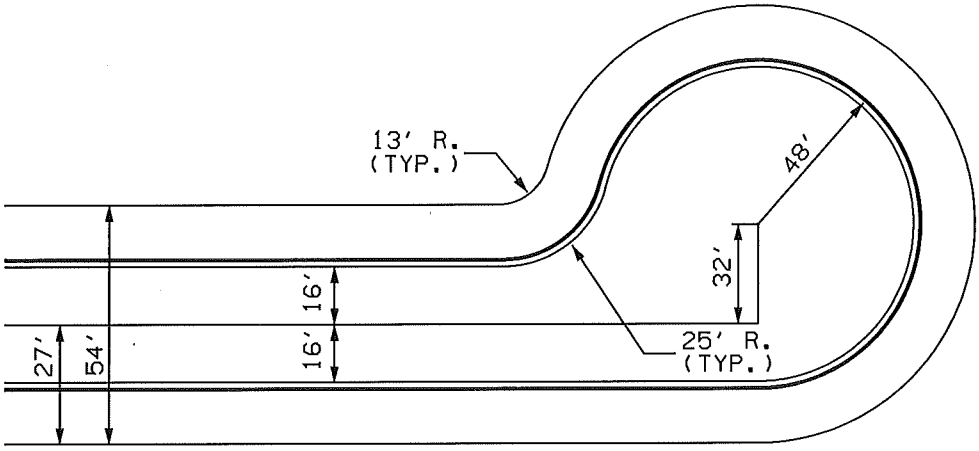

OFFSET

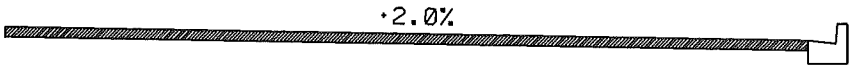

PROFILE
NTS

NOTES:

1. MINIMUM SLOPES
   0.5% AT CURB AROUND BULB
   2.0% CROSS SLOPE TO CURB

City of Newberg
PUBLIC WORKS ENGINEERING DIVISION
414 E. FIRST STREET NEWBERG, OREGON 97132

REVISIONS:

CUL-DE-SAC

SCALE:	N.T.S.
DATE:	May 2007
APPROVED BY:	D. Danicic
STANDARD DRAWING	512

EXHIBIT "B" TO
RESOLUTION NO. 2011-2936

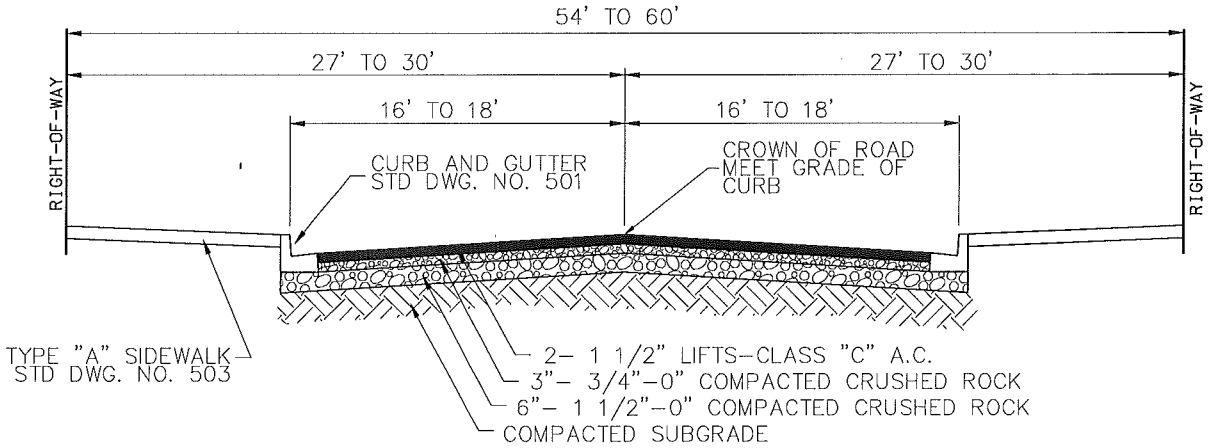

City of Newberg PUBLIC WORKS ENGINEERING DIVISION 414 E. FIRST STREET NEWBERG, OREGON 97132 PHONE 503-537-1240 - FAX 503-537-1277	REVISIONS: 4-8-2010	RESIDENTIAL STREET CROSS SECTION	SCALE: N.T.S. DATE: May 2007 APPROVED BY: D. Danicic STANDARD DRAWING 513

EXHIBIT "B" TO
RESOLUTION NO. 2011-2936

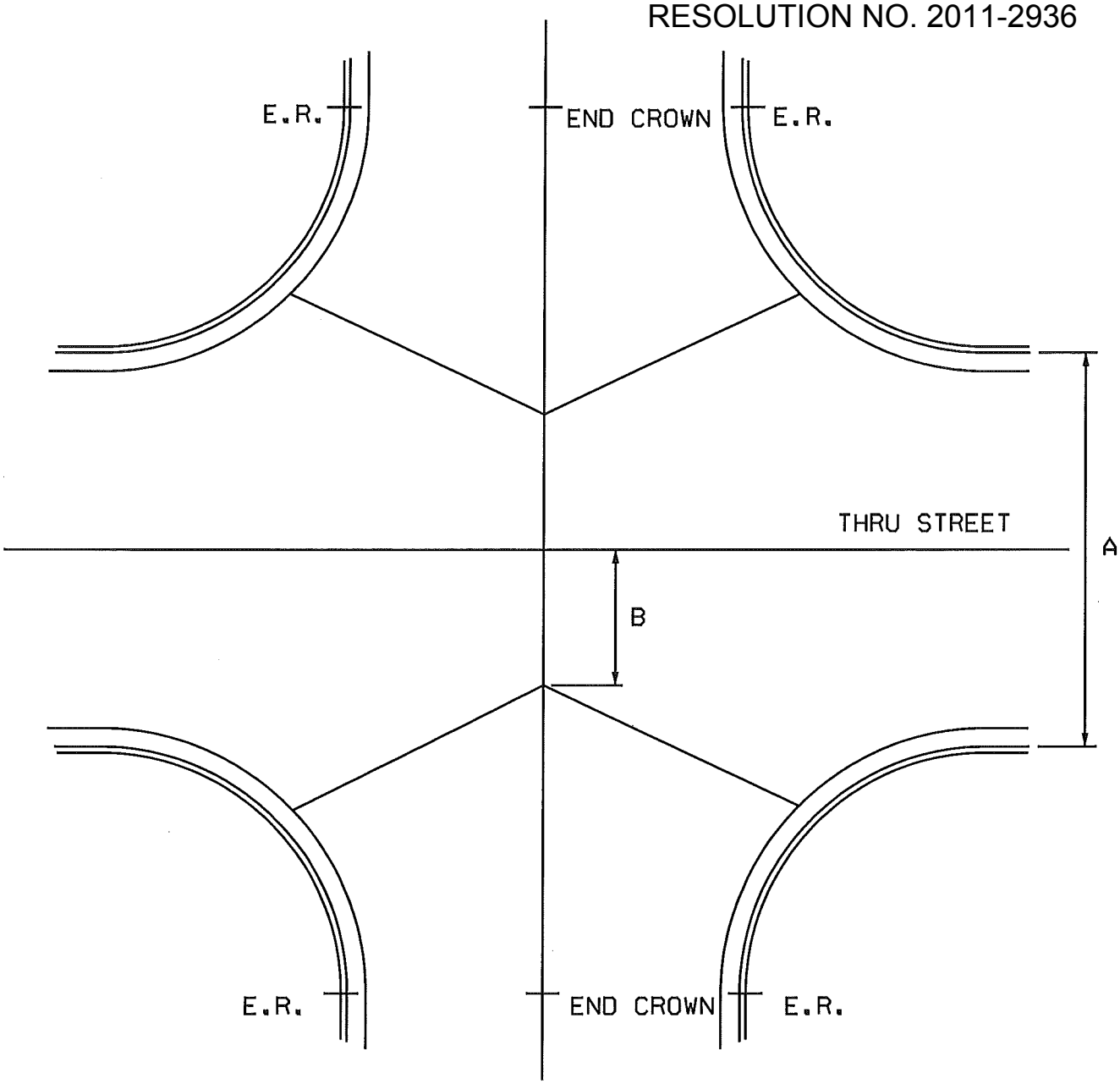

STREET WIDTH "A"	TRAFFIC LANE WIDTH "B"
32'	11'
34'	12'
36'	13'
40'	15'
46'	18'

NOTE:
THIS PAVING PATTERN NOT TO BE USED WHEN INTERSECTING GRADES ARE LESS THAN .50%.

City of Newberg
PUBLIC WORKS ENGINEERING DIVISION
414 E. FIRST STREET NEWBERG, OREGON 97132

REVISIONS:

INTERSECTION PAVING PLAN

SCALE:	N.T.S.
DATE:	May 2007
APPROVED BY:	D. Danicic
STANDARD DRAWING	514

EXHIBIT "B" TO
RESOLUTION NO. 2011-2936

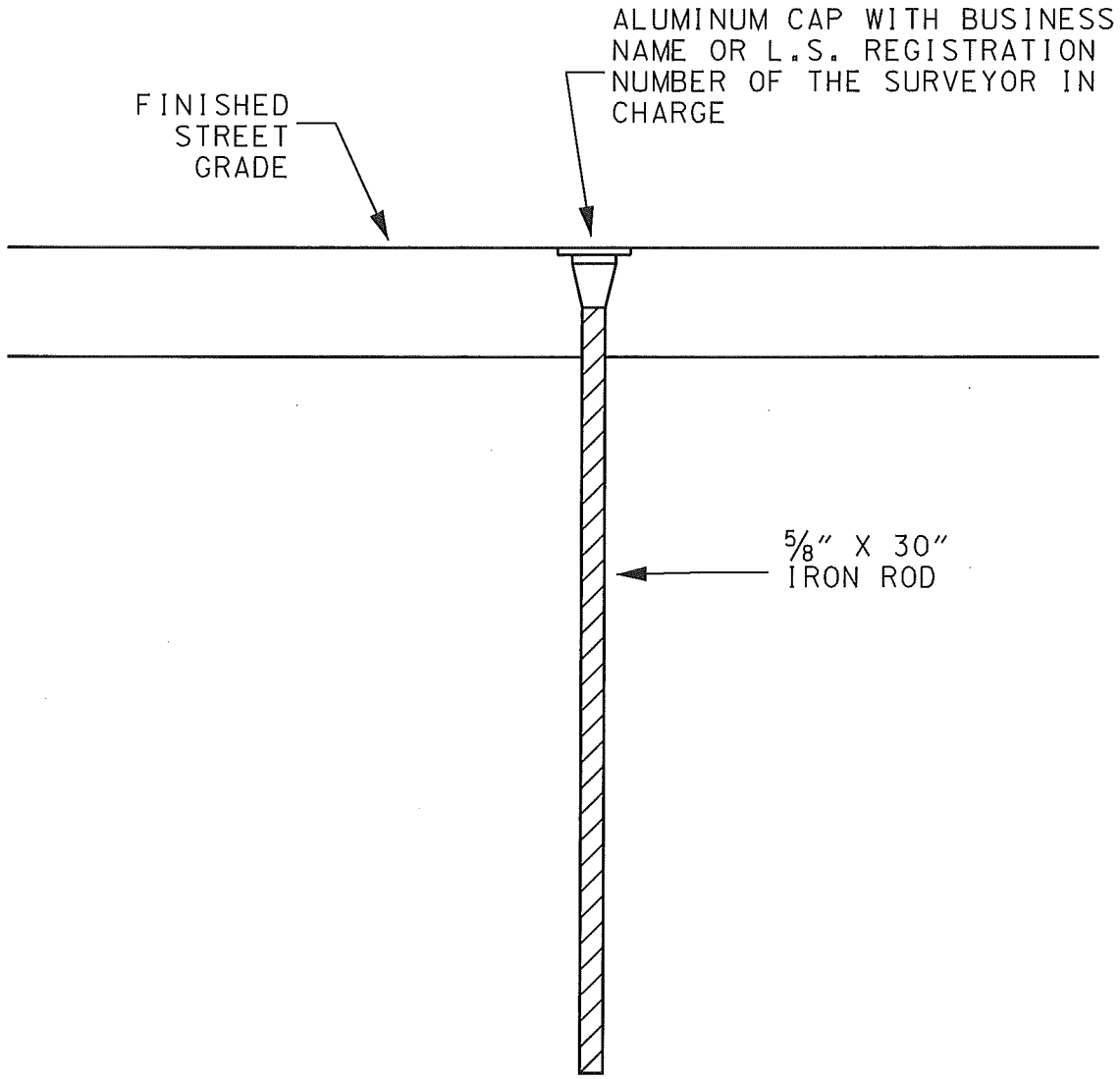

NOTES

1. MONUMENTS TO BE SET AT ALL STREET INTERSECTIONS, POINTS OF CURVATURE AND POINTS OF TANGENCY.

City of Newberg
PUBLIC WORKS ENGINEERING DIVISION
414 E. FIRST STREET NEWBERG, OREGON 97132

REVISIONS:

STREET MONUMENTATION

SCALE:	N.T.S.
DATE:	May 2007
APPROVED BY:	D. Danicic
STANDARD DRAWING	515

EXHIBIT "B" TO
RESOLUTION NO. 2011-2936

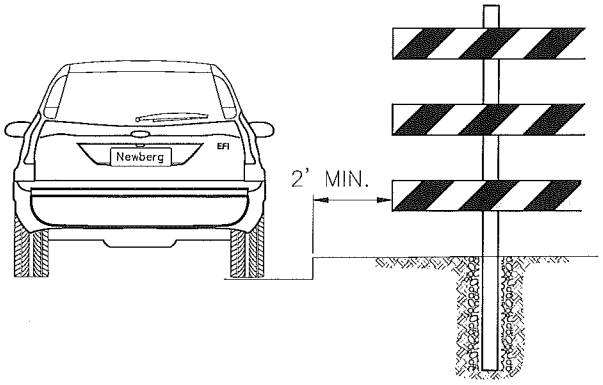

TYPICAL NARROWING OF DRIVING AREA BARRICADE (USE DIMENSIONS BELOW) ORIENT DIAGOINAL BARS TO CHANNEL TRAFFIC AS SHOWN

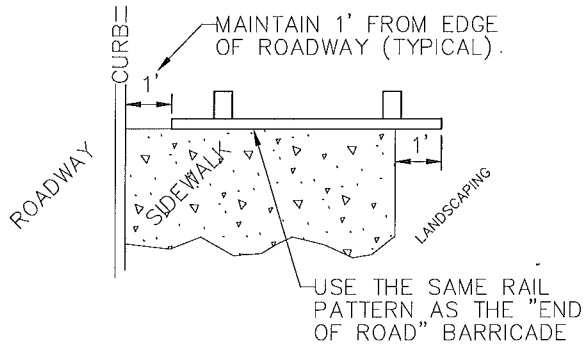

END OF SIDEWALK ('TYPE B')

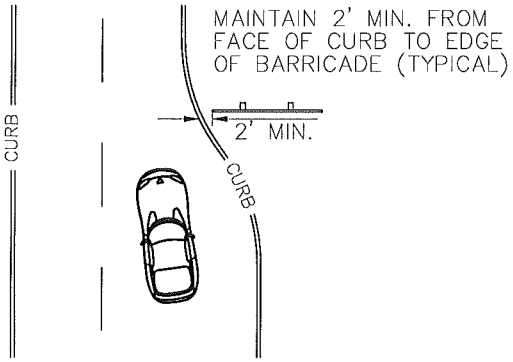

NARROWING OF DRIVING AREA

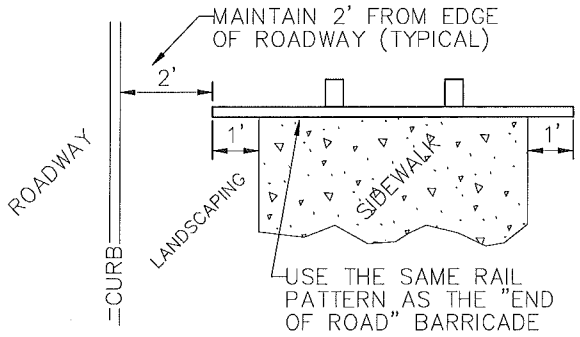

END OF SIDEWALK ('TYPE A')

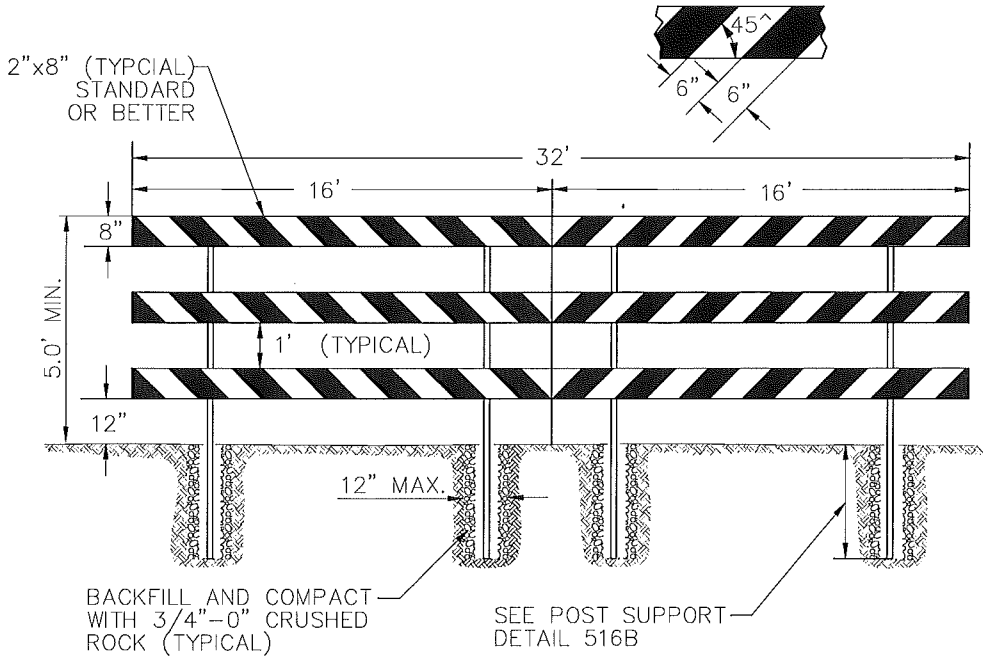

END OF ROAD BARRICADE
(TYPICAL DIMENSIONS AND LAYOUT)

NOTES:

ALTERNATING RED & WHITE HIGH INTENSITY PRISMATIC 0.080 ALUMINUM SHEATING SHALL BE SCREWED TO THE HORIZONTAL RAILS – MINIMUM 1" SCREWS

ALL FASTENERS TO BE STAINLESS STEEL OR RUST PROOF HEAVY GALVANIZED

FOR STREET BARRICADES HORIZONTAL RAIL LENGTH SHALL EQUAL THE DISTANCE BETWEEN THE FACE OF CURB PLUS 2'. (EG. 34' CURB TO CURB= 36' RAILS)

USE $\frac{7}{16}$"X5" GALVANIZED CARRIAGE WITH FLAT AND LOCK WASHER, 2 BOLTS PER RAIL PER POST

City of Newberg
PUBLIC WORKS ENGINEERING DIVISION
414 E. FIRST STREET NEWBERG, OREGON 97132
PHONE 503-537-1240 - FAX 503-537-1277

REVISIONS:	STREET BARRICADES	SCALE: N.T.S.
		DATE: July 2009
		APPROVED BY: P. Chiu
		STANDARD DRAWING 516A

EXHIBIT "B" TO
RESOLUTION NO. 2011-2936

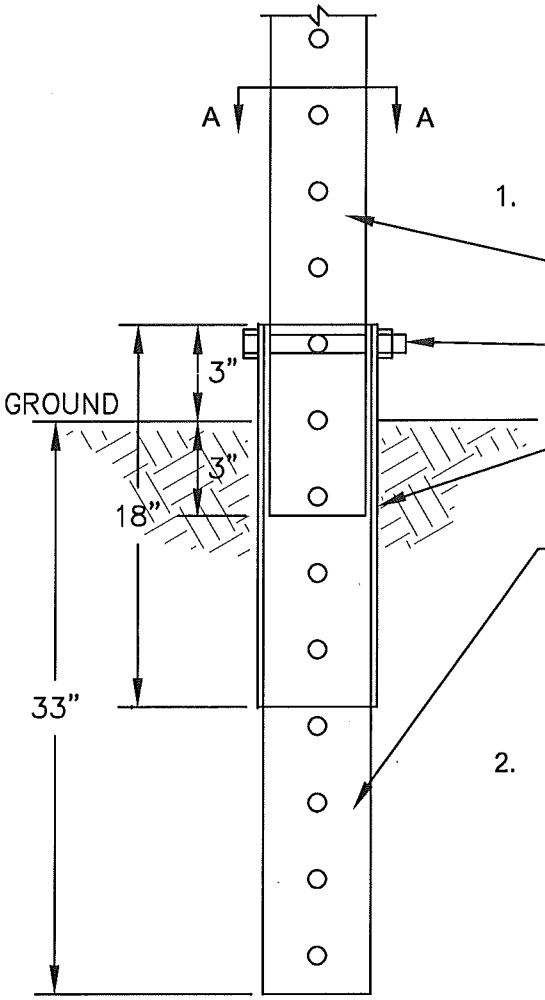

1. MATERIALS:

2" X 2" X 63", 12 GA. GALV. PERFORATED STEEL POST.

3/8" X 3 1/2", GALVANIZED HEX HEAD BOLT WITH LOCK WASHER.

2 1/2" X 2 1/2" X 18", 12 GA. GALV. PERFORATED STEEL STIFFNER POST.

2 1/4" X 2 1/4" X 30", 12 GA. GALV. PERFORATED STEEL ANCHOR.

7/16" X 5", GALVANIZED CARRIAGE WITH FLAT AND LOCK WASHER, 2 BOLTS PER RAIL PER POST.

2. BARRICADE FOR SIDEWALK IS SIMILAR.

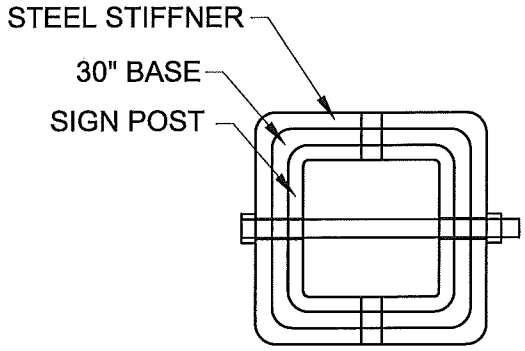

SECTION A - A

1. FOR APPLICATION OF BARRICADE ON EXISTING CONCRETE, USE TELSPAR STEEL BASE PLATE PER DETAIL ON STANDARD DRAWING #525B, STANDARD SIGNPOST CONCRETE APPLICATIONS DETAIL.

City of Newberg PUBLIC WORKS ENGINEERING DIVISION 414 E. FIRST STREET NEWBERG, OREGON 97132 PHONE 503-537-1240 - FAX 503-537-1277	REVISIONS:	STREET BARRICADE POST SUPPORT DETAIL	SCALE: N.T.S. DATE: July 2009 APPROVED BY: P. Chiu STANDARD DRAWING 516B

EXHIBIT "B" TO
RESOLUTION NO. 2011-2936

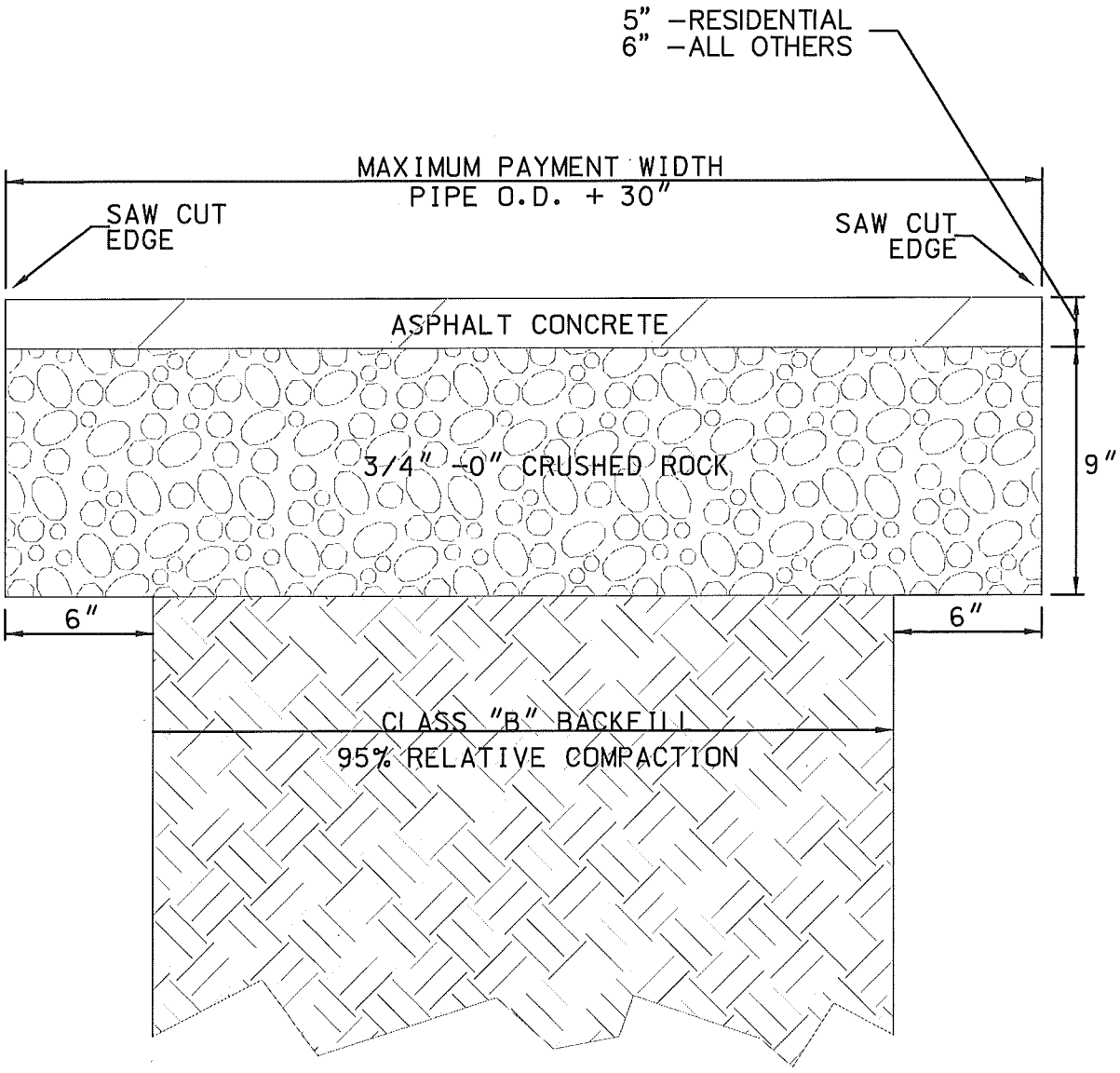

NOTES:

1. SAW CUT ASPHALT TO NEAT STRAIGHT LINES.
2. ASPHALT – CLASS "C" MIX PLACED IN 2 LIFTS.
3. ALL JOINTS SHALL BE SEALED WITH RUBBERIZED ASPHALT EMULSION (HOT OR COLD) AND DE-TACKED WITH SAND IF IMMEDIATE TRAFFIC IS NEEDED AT ALL JOINTS.
4. ACTUAL PAYMENT WIDTH TO BE DETERMINED AT SITE PRIOR TO PAVING.

City of Newberg PUBLIC WORKS ENGINEERING DIVISION 414 E. FIRST STREET NEWBERG, OREGON 97132 PHONE 503-537-1240 - FAX 503-537-1277	REVISIONS: Jan 2011	TRENCH PAVING	SCALE: N.T.S. DATE: May 2007 APPROVED BY: D,Danicic STANDARD DRAWING 517

EXHIBIT "B" TO
RESOLUTION NO. 2011-2936

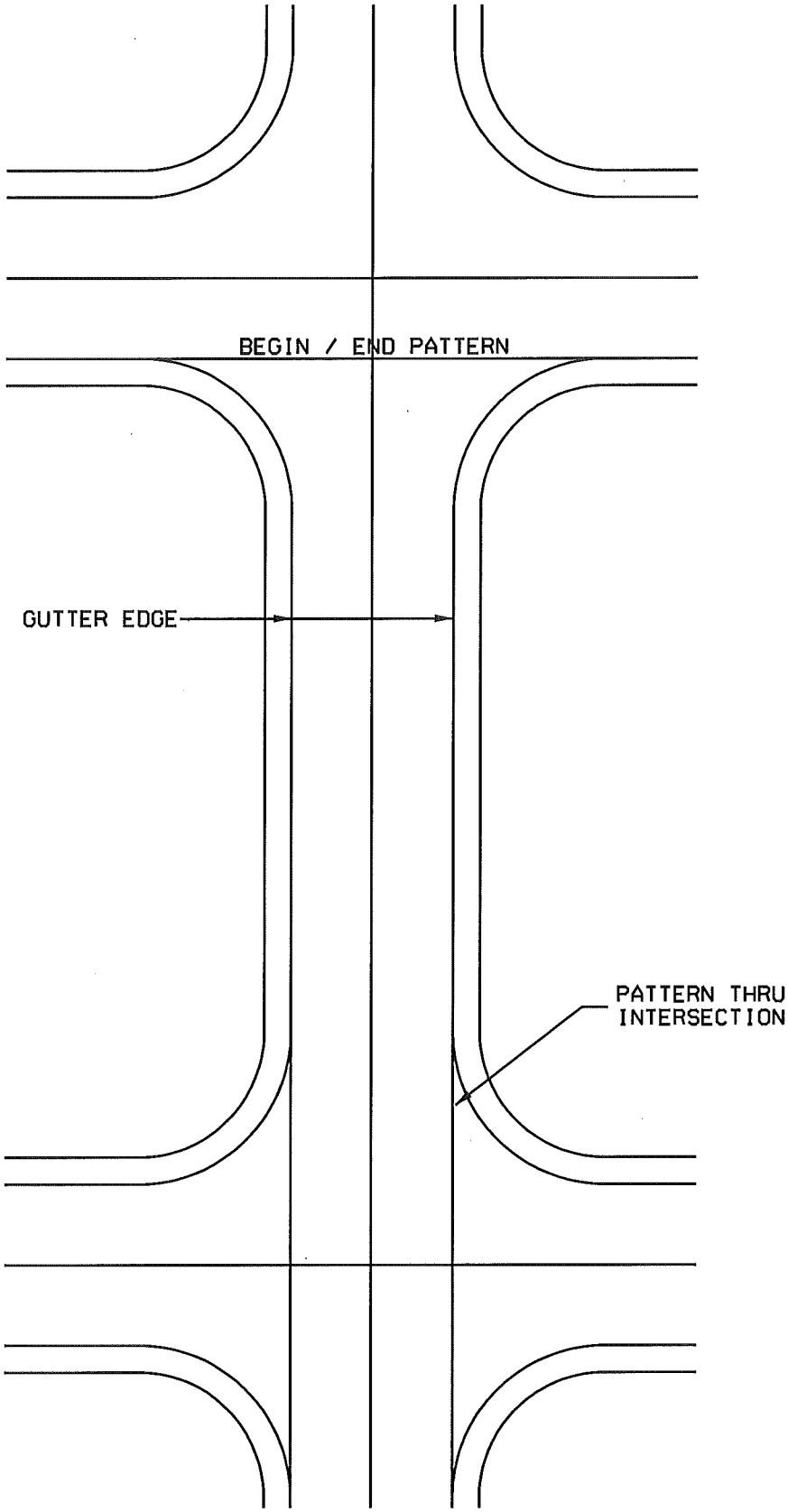

City of Newberg
PUBLIC WORKS ENGINEERING DIVISION
414 E. FIRST STREET NEWBERG, OREGON 97132

REVISIONS:

PAVEMENT SEAL COAT PATTERN

SCALE:	N.T.S.
DATE:	May 2007
APPROVED BY:	D. Danicic
STANDARD DRAWING	518

EXHIBIT "B" TO
RESOLUTION NO. 2011-2936

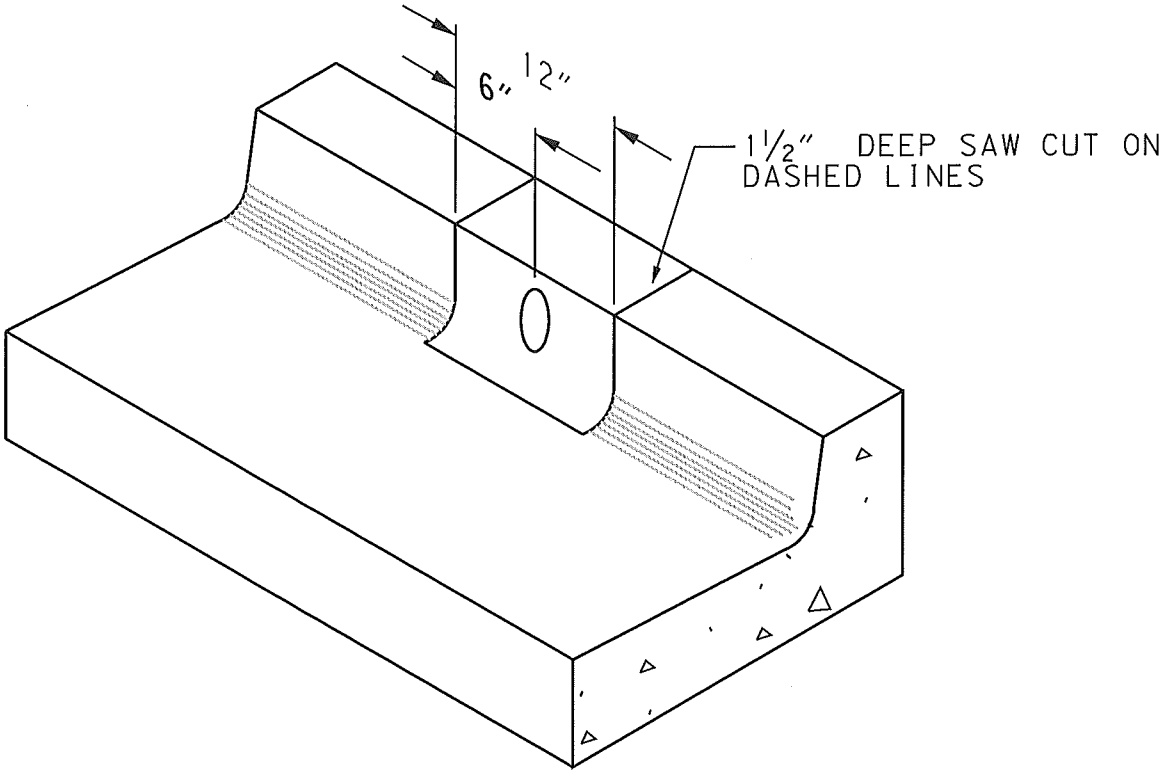

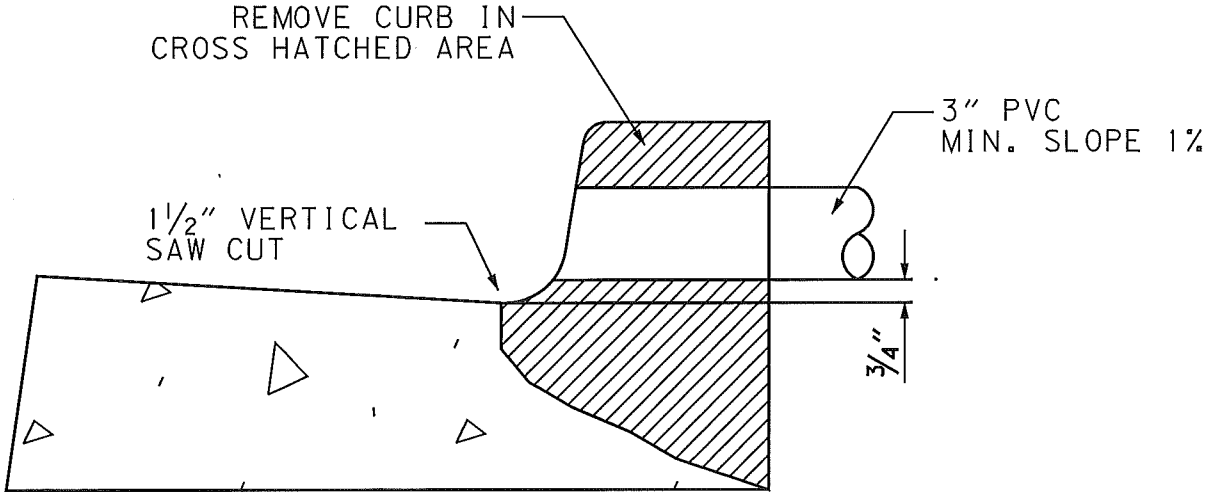

City of Newberg
PUBLIC WORKS ENGINEERING DIVISION
414 E. FIRST STREET NEWBERG, OREGON 97132

REVISIONS:

RAIN DRAIN
CURB CUT

SCALE:	N.T.S.
DATE:	May 2007
APPROVED BY:	D. Danicic
STANDARD DRAWING	519

EXHIBIT "B" TO
RESOLUTION NO. 2011-2936

GEOTEXTILE SPECIFICATIONS

PROPERTY	TEST	MIN. VALUE
TENSILE STRENGTH, LBS	ASTM D-4632	80
ELONGATION, %	ASTM D-4632	50
ASPHALT RETENTION, GAL/SY	OSHD TM-817	0.20
MELTING POINT, °F	ASTM D-276	300

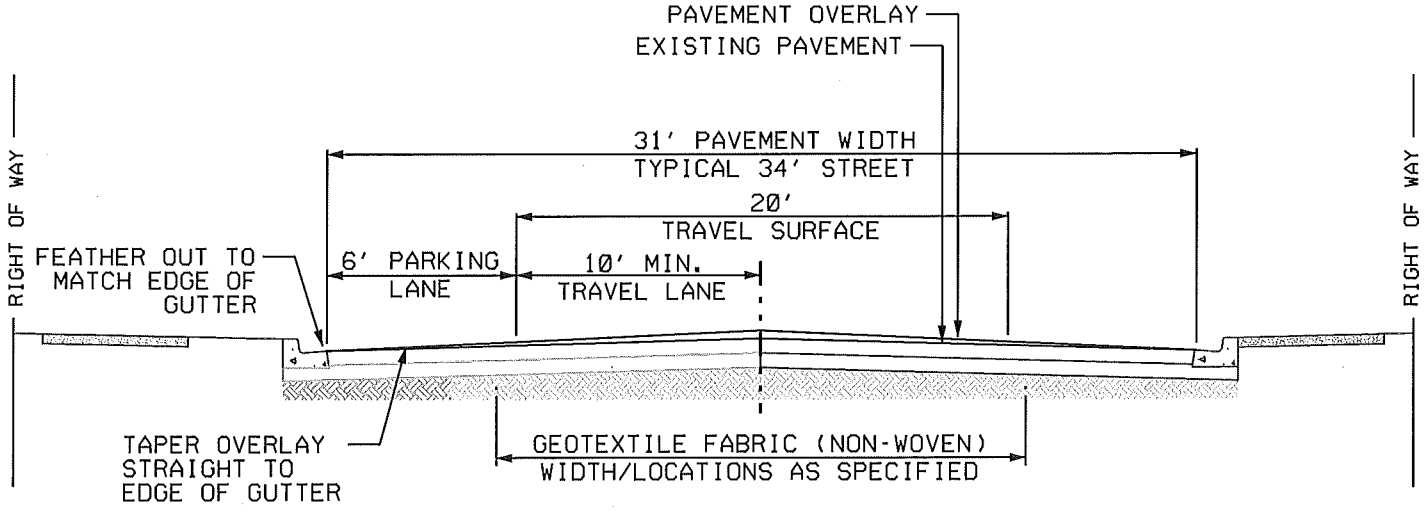

NOTES
1. OVERLAY PATTERN FOR DIFFERENT WIDTH STREETS WILL BE SIMILAR.
2. OFFSET PAVING PANELS 12" MIN. FROM JOINTS OF EXISTING PAVEMENT.

City of Newberg
PUBLIC WORKS ENGINEERING DIVISION
414 E. FIRST STREET NEWBERG, OREGON 97132

REVISIONS:

ASPHALT OVERLAY TYPICAL SECTION

SCALE:	N.T.S.
DATE:	May 2007
APPROVED BY:	D. Danicic
STANDARD DRAWING	520

EXHIBIT "B" TO
RESOLUTION NO. 2011-2936

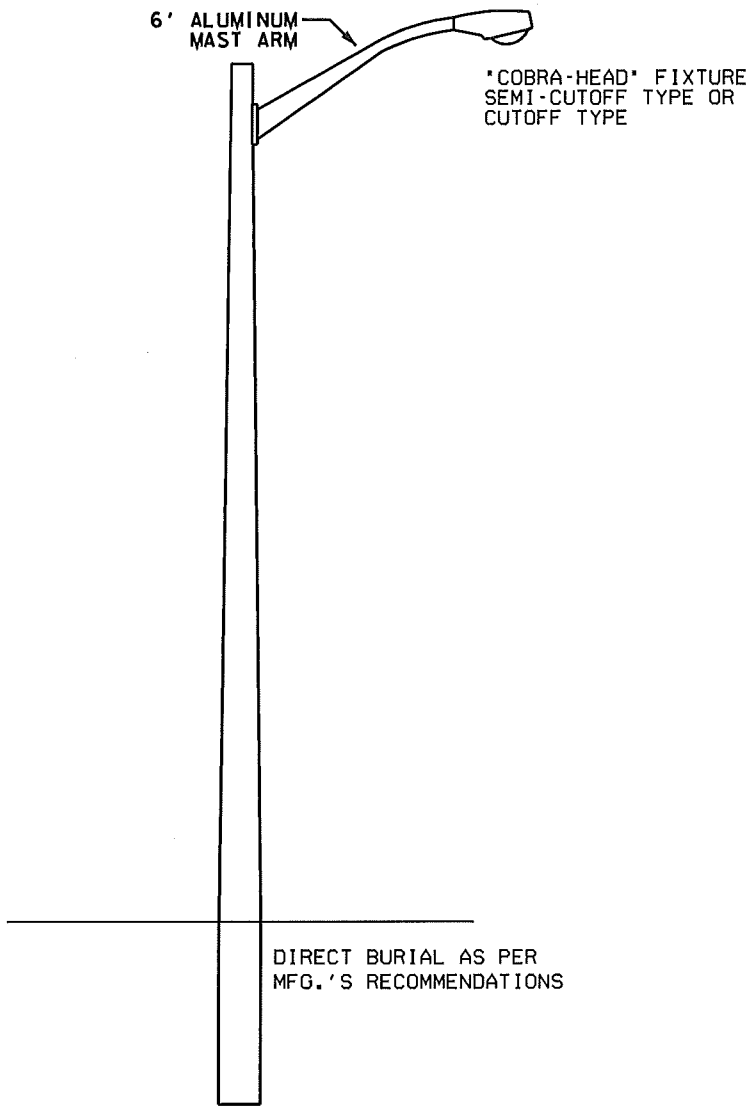

NOTES:

1. LOCATION OF STREET LIGHT IS SHOWN ON STANDARD DRAWING NO. 103
2. STREET LIGHT HIGH PRESSURE SODIUM LUMINAIRE.
3. ALL FIBERGLASS POLES SHALL BE GRAY.
4. FOR CURBSIDE SIDEWALK (TYPE'B') THE STREET LIGHT SHALL BE 2' FROM THE BACK OF THE SIDEWALK.
5. FOR SETBACK SIDEWALK (TYPE'A') THE STREET LIGHT SHALL BE 2' FROM THE FRONT OF THE SIDEWALK.

STREET WIDTH (FT.)	SERVICE TYPE	WATTAGE	LUMENS	POLE HT. (FT.)	ARM TYPE	VOLTAGE	SPACING (ft.)	TYPE
32'	RESIDENTIAL 'A' SIDEWALK	100	9500	25	6' MAST	120	210	FIBERGLASS
34'	RESIDENTIAL 'A' SIDEWALK	100	9500	25	6' MAST	120	210	FIBERGLASS
40'	COMMERCIAL COLLECTOR STREET	150	16000	30	6' MAST	240	155	FIBERGLASS
46'	COMMERCIAL ARTERIAL STREET	200	22000	30	6' MAST	240	180	FIBERGLASS

City of Newberg
PUBLIC WORKS ENGINEERING DIVISION
414 E. FIRST STREET NEWBERG, OREGON 97132

REVISIONS:

STREET LIGHT

SCALE: N.T.S.
DATE: May 2007
APPROVED BY: D. Danicic
STANDARD DRAWING 522

EXHIBIT "B" TO
RESOLUTION NO. 2011-2936

ALL SIGNS SHALL BE HIGH INTENSITY REFLECTIVE PRISMATIC GRADE SHEETING AT MINIMUM

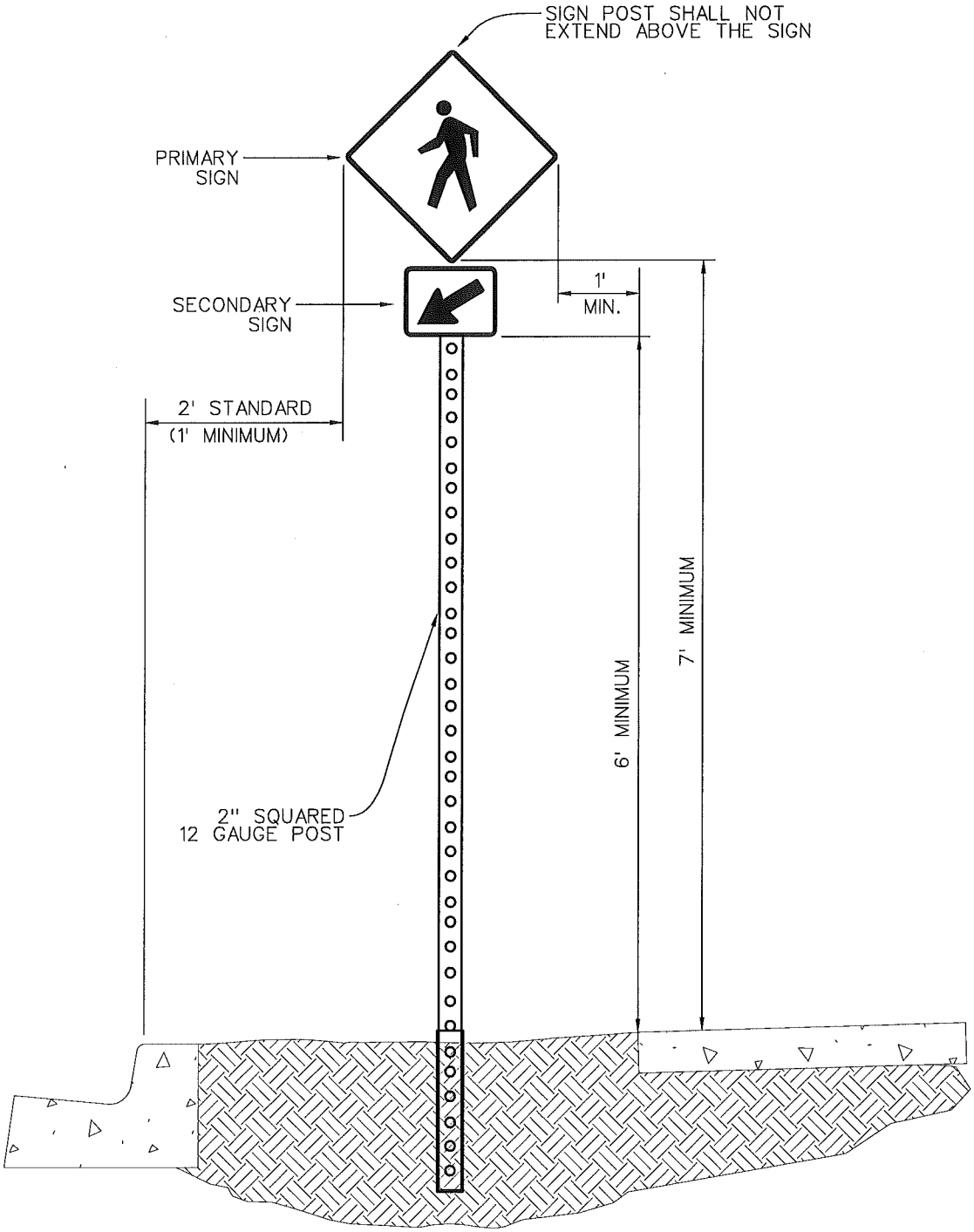

REFERENCE: MANUAL ON UNIFORM TRAFFIC CONTROL DEVICES SECTION 2

City of Newberg
PUBLIC WORKS ENGINEERING DIVISION
414 E. FIRST STREET NEWBERG, OREGON 97132
PHONE 503-537-1240 - FAX 503-537-1277

REVISIONS:
DECEMBER 2007
OCTOBER 2010

SIGN CLEARANCES

SCALE:	N.T.S.
DATE:	JULY 2004
APPROVED BY:	D. Danicic
STANDARD DRAWING	523

EXHIBIT "B" TO
RESOLUTION NO. 2011-2936

BLADE AND LETTERING SIZE REQUIREMENTS

SPEED (MPH)	BLADE SIZE	DIRECTION (N,S,E,W)	LETTER HEIGHT	LETTER SPACING	DESIGNATION (ST,DR,ETC..)
25 OR LESS	6" HIGH	2"	4"	1/2"	2"
26 OR MORE	9" HIGH	.3"	6"	3/4"	3"
ADJUST BLADE LENGTH TO ACCOMMODATE LENGTH OF STREET NAME					

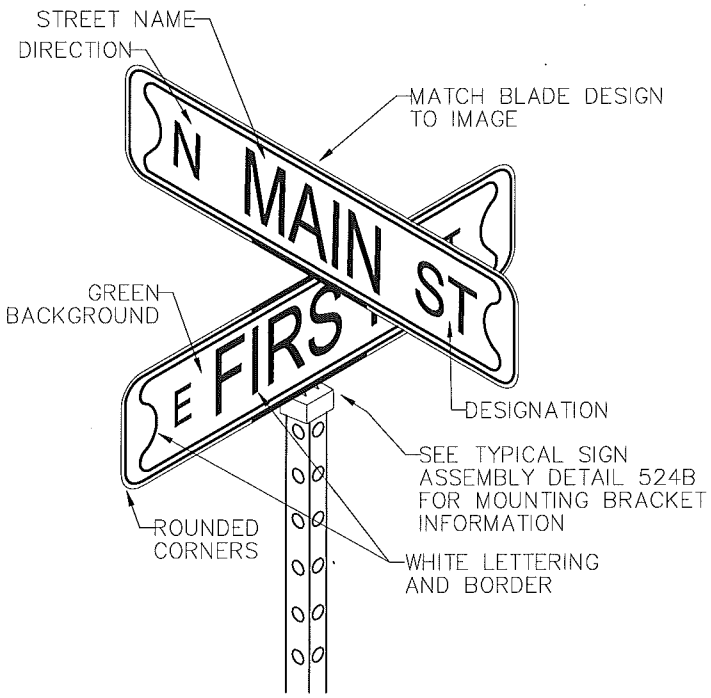

TYPE:

FLAT DOUBLE FACED, .125 ALUMINUM STREET NAME SIGN: HIGH INTENSITY PRISMATIC GRADE SHEETING

COLOR/DESIGN:
WHITE LETTERING ON GREEN WITH WHITE BORDER AS SHOWN.

NOTES:

MAINTAIN 9'6" OF CLEARANCE FROM THE BOTTOM OF THE LOWEST STREET SIGN TO FINISH GRADE

SLEEVE SHALL BE 30" – 12GA X 2¼" SQ. TUBE
POST SHALL BE 12GA X 2" SQ. TUBE

LOCATE POSTS SO TRAFFIC CONTROL SIGNS CAN BE PLACED ON THE SAME POST WITH PROPER CLEARANCE

DO NOT USE ABBREVIATIONS FOR STREET NAMES (MT. VIEW vs. MOUNTAINVIEW)

ALL SIGNS SHALL BE HIGH INTENSITY PRISMATIC GRADE SHEETING

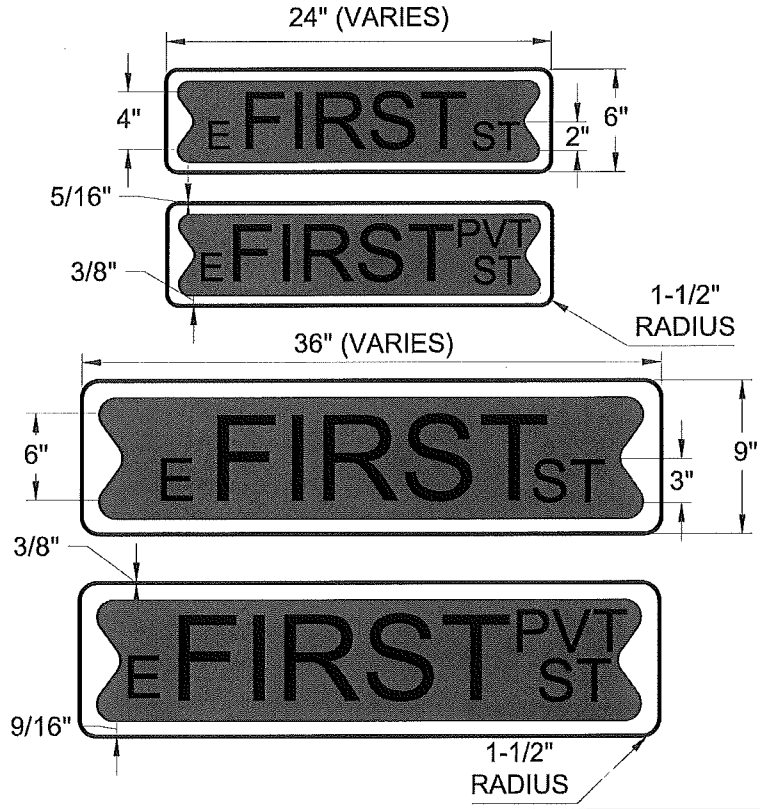

SIGN POST LOCATIONS

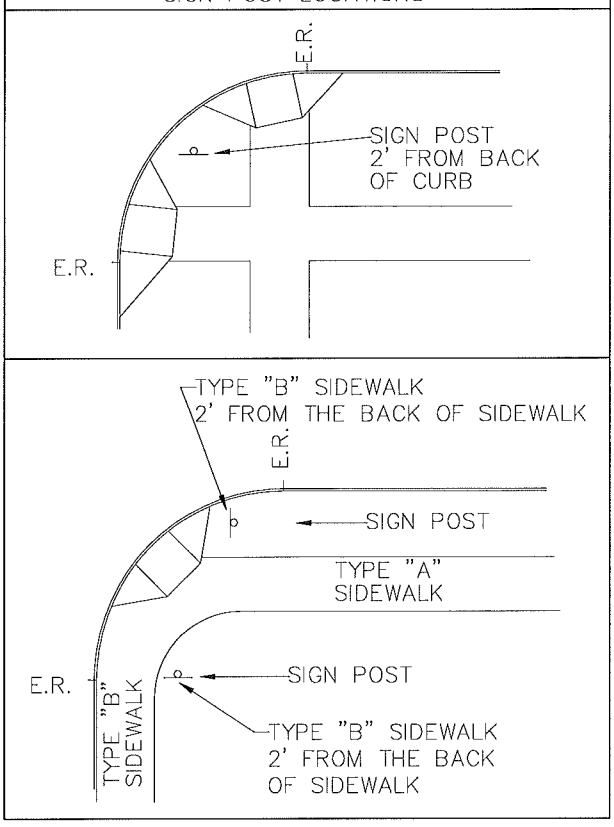

City of Newberg
PUBLIC WORKS ENGINEERING DIVISION
414 E. FIRST STREET NEWBERG, OREGON 97132
PHONE 503-537-1240 - FAX 503-537-1277

REVISIONS:

STREET SIGN AND POST LOCATION

SCALE:	N.T.S.
DATE:	July 2009
APPROVED BY:	P. Chiu
STANDARD DRAWING	524A

EXHIBIT "B" TO
RESOLUTION NO. 2011-2936

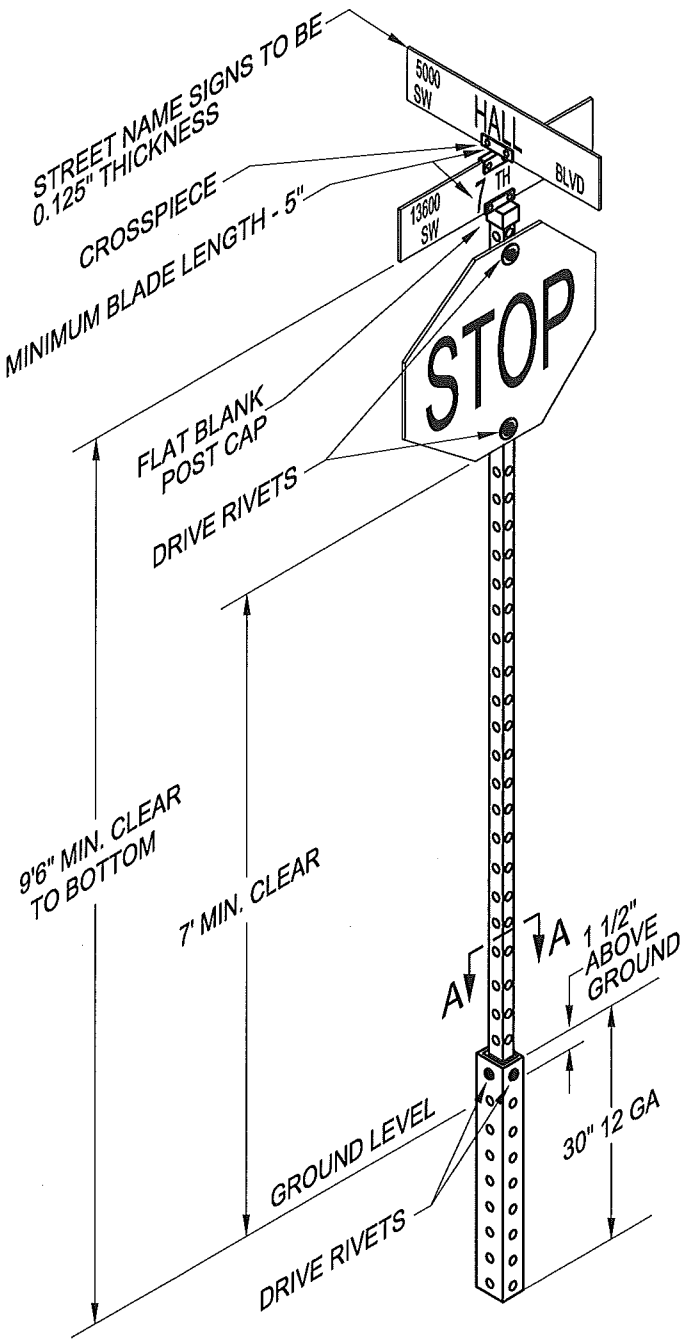

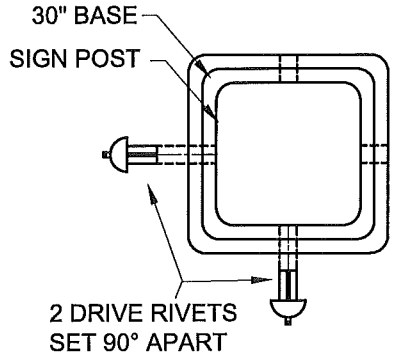

SECTION A - A

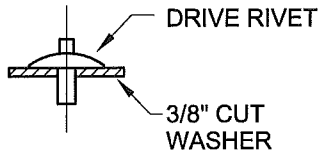

DRIVE RIVET DETAIL
FOR MOUNTING SIGN

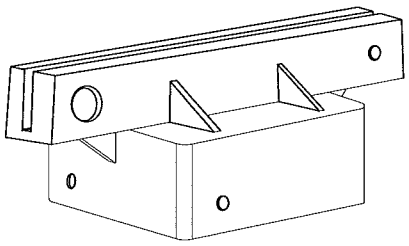

VULCAN INC. VS-4 CAP 5 1/4" BLADE HOLDER (OR EQUIVALENT)

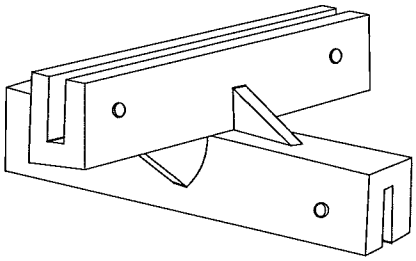

VULCAN INC. VS-4 CROSS 5 1/4" BLADE HOLDER (OR EQUIVALENT)

STREET NAME BLADE HOLDERS

NOTES:

1. **Sign post shall be inserted a minimum of 12" into the 30" base.**
2. **Sleeve shall be 30" 12 guage x 2 $\frac{1}{4}$" - Post shall be 12GA x 2".**
3. **Cap and crosspiece to be the same style, 5" blade minimum.**

City of Newberg PUBLIC WORKS ENGINEERING DIVISION 414 E. FIRST STREET NEWBERG, OREGON 97132 PHONE 503-537-1240 - FAX 503-537-1277	REVISIONS: Nov. 2010	TYPICAL SIGN ASSEMBLY	SCALE: NTS DATE: July 2009 APPROVED BY: P.Chiu STANDARD DRAWING 524B

EXHIBIT "B" TO
RESOLUTION NO. 2011-2936

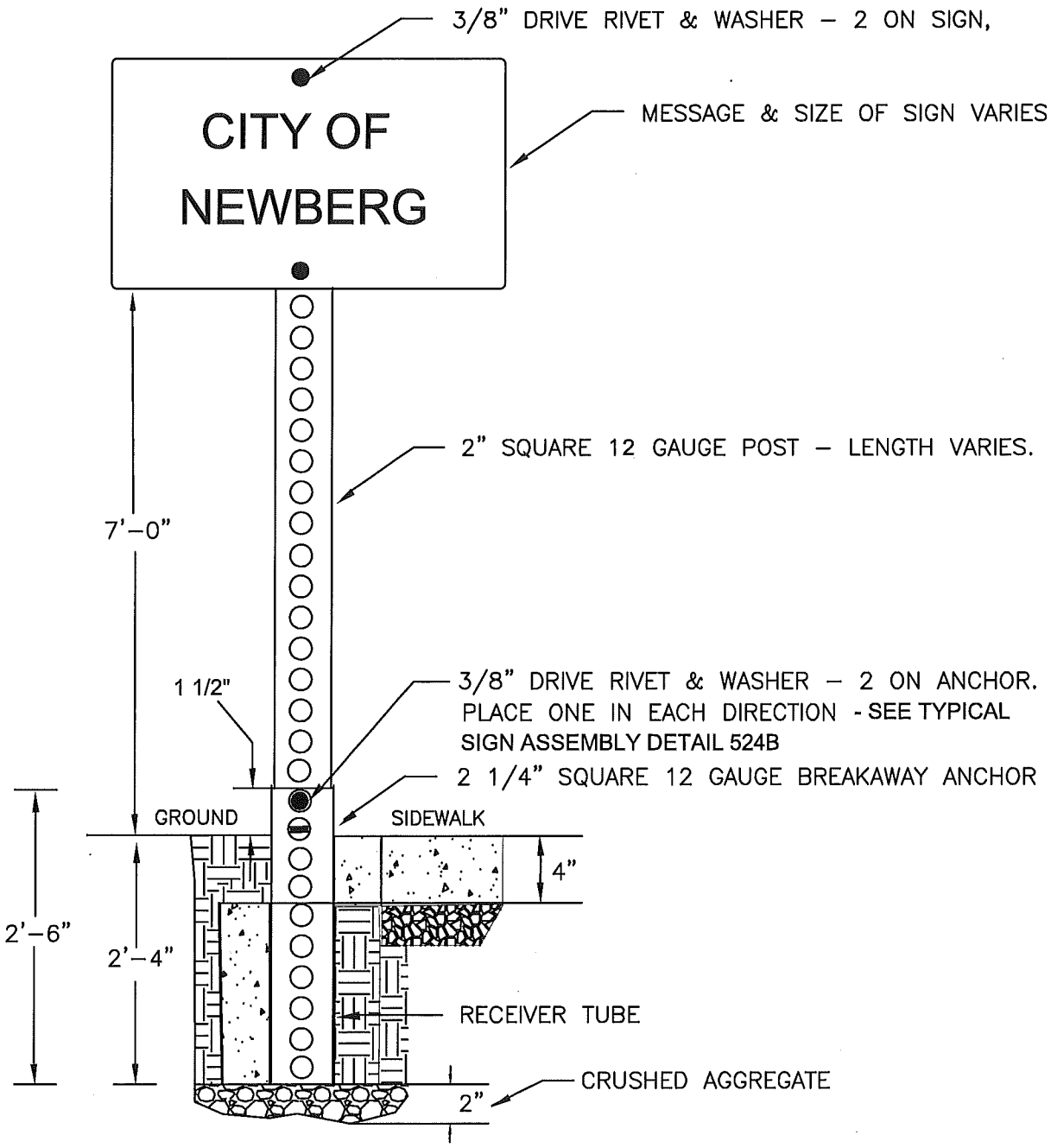

1. SIGN PLACEMENT IN DIRT SHALL BE A MINIMUM OF 24" FROM CURB FACE - VARIES BY SIGN SIZE.
2. POST SHALL BE SPRAYED WITH ANTI-SEIZE ON THE BOTTOM 2'-6".
3. SIGN POST SHALL BE INSERTED A MINIMUM OF 12" INTO THE 30" BASE.

City of Newberg PUBLIC WORKS ENGINEERING DIVISION 414 E. FIRST STREET NEWBERG, OREGON 97132 PHONE 503-537-1240 - FAX 503-537-1277	REVISIONS:	STANDARD SIGNPOST GROUND APPLICATIONS	SCALE: N.T.S. DATE: July 2009 APPROVED BY: P. Chiu STANDARD DRAWING 525A

EXHIBIT "B" TO
RESOLUTION NO. 2011-2936

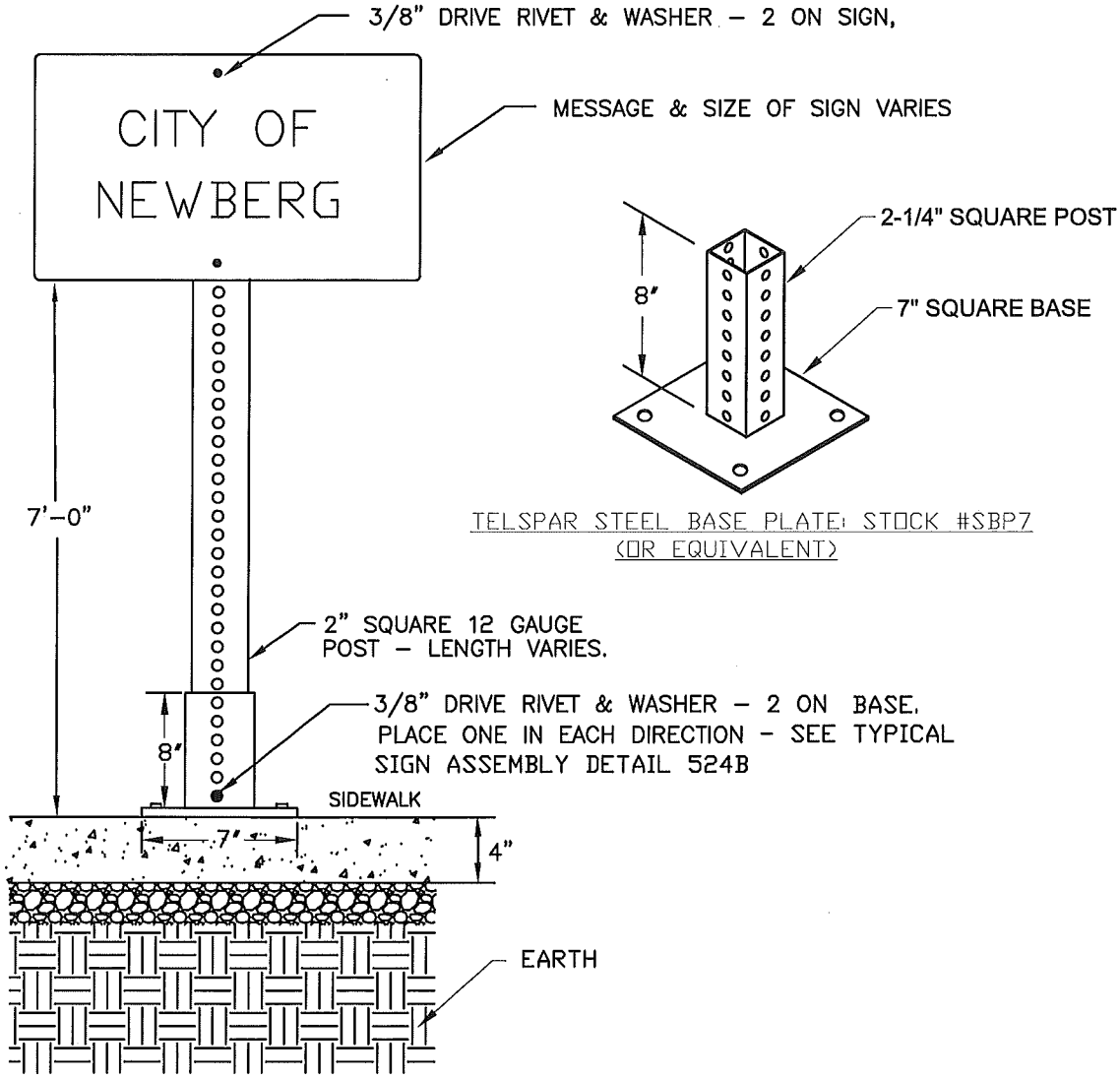

1. STEEL BASE SHALL BE A 2 1/4" SQUARE 12 GAUGE POST
2. SIGN POST PLACEMENT IN CONCRETE SHALL BE A MINIMUM OF 24" FROM CURB FACE - VARIES BY SIGN SIZE.
3. USE 1/2" X 4-1/4" RED HEAD FASTENERS FOR STEEL BASE PLATE
4. STEEL BASE PLATE APPLICATION FOR EXISTING CONCRETE ONLY
5. FOR EXISTING SIDEWALK, WITH CITY OF NEWBERG ENGINEERING DIVISION APPROVAL ONLY.

City of Newberg PUBLIC WORKS ENGINEERING DIVISION 414 E. FIRST STREET NEWBERG, OREGON 97132 PHONE 503-537-1240 - FAX 503-537-1277	REVISIONS: OCT. 2010	STANDARD SIGNPOST CONCRETE APPLICATIONS	SCALE: N.T.S. DATE: JULY 2004 APPROVED BY: D. Danicic STANDARD DRAWING 525B

EXHIBIT "B" TO
RESOLUTION NO. 2011-2936

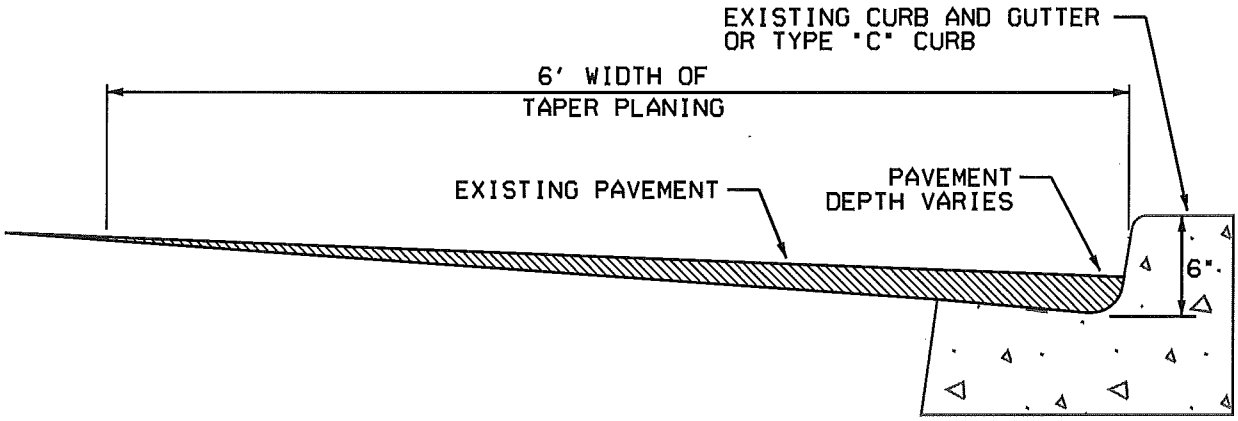

NOTES
1. PLANE FLUSH TO CURB FACE.
2. PLANE TO SURFACE OF CONCRETE GUTTER OR TO 6" EXPOSURE OF TYPE "C" CURB.

City of Newberg
PUBLIC WORKS ENGINEERING DIVISION
414 E. FIRST STREET NEWBERG, OREGON 97132

REVISIONS:

PAVEMENT MILLING

SCALE:	N.T.S.
DATE:	May 2007
APPROVED BY:	D. Danicic
STANDARD DRAWING	526

EXHIBIT "B" TO
RESOLUTION NO. 2011-2936

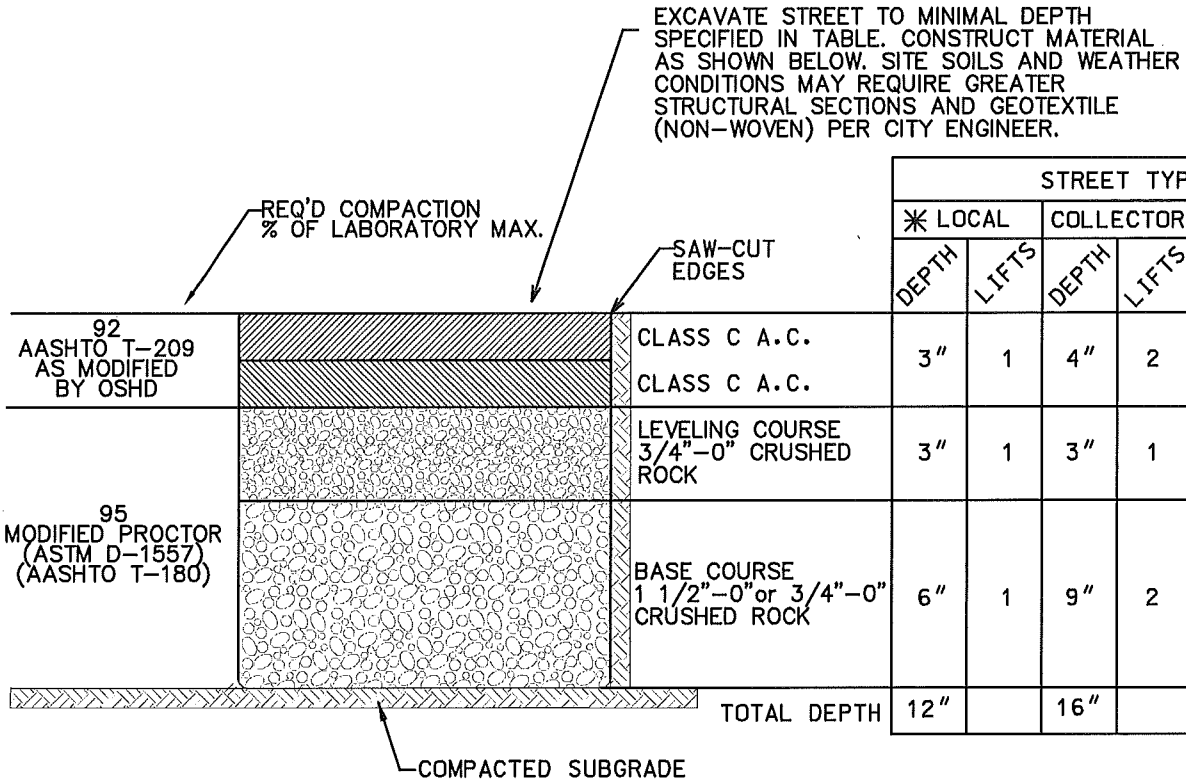

	STREET TYPE					
	✳ LOCAL		COLLECTOR		ARTERIAL	
	DEPTH	LIFTS	DEPTH	LIFTS	DEPTH	LIFTS
CLASS C A.C. / CLASS C A.C.	3″	1	4″	2	6″	3
LEVELING COURSE 3/4"-0" CRUSHED ROCK	3″	1	3″	1	3″	1
BASE COURSE 1 1/2"-0"or 3/4"-0" CRUSHED ROCK	6″	1	9″	2	12″	2
TOTAL DEPTH	12″		16″		21″	

GEOTEXTILE SPECIFICATIONS

PROPERTY	TEST	MIN. VALUE
TENSILE STRENGTH, lbs	ASTM D-4632	120
ELONGATION, WET %	ASTM D-4632	40
COEFFICIENT OF WATER PERMEABILITY, cm/sec	ASTM D-4491	0.10
PUNCTURE STRENGTH, lbs	ASTM D-4833	80
MULLEN BURST STRENGTH, psi	ASTM D-3786	250

✳ LOCAL STREET TYPE = INTERIOR RESIDENTIAL SINGLE FAMILY DETACHED ZONES

City of Newberg
PUBLIC WORKS ENGINEERING DIVISION
414 E. FIRST STREET NEWBERG, OREGON 97132
PHONE 503-537-1240 - FAX 503-537-1277

REVISIONS:
Jan 2011

STRUCTURAL STREET SECTIONS

SCALE: N.T.S.
DATE: May 2007
APPROVED BY: D,Danicic
STANDARD DRAWING 527

EXHIBIT "B" TO
RESOLUTION NO. 2011-2936

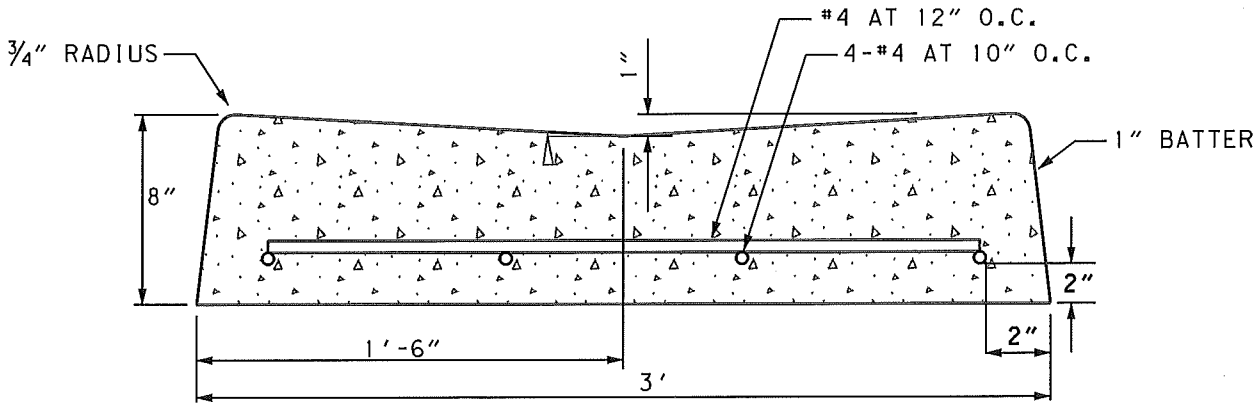

NOTES

1. CONCRETE MIX: 4,000 PSI AT 28 DAYS WITH 6% ENTRAINED AIR.

City of Newberg
PUBLIC WORKS ENGINEERING DIVISION
414 E. FIRST STREET NEWBERG, OREGON 97132

REVISIONS:

VALLEY GUTTER

SCALE:	N.T.S.
DATE:	May 2007
APPROVED BY:	D. Danicic
STANDARD DRAWING	528

EXHIBIT "B" TO
RESOLUTION NO. 2011-2936

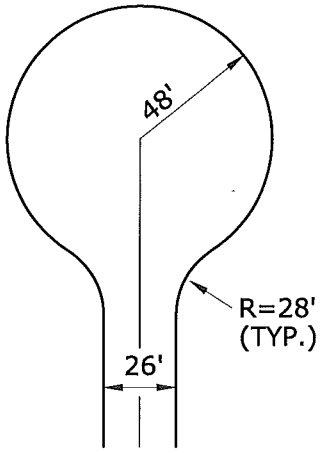

96' DIAMETER
CUL-DE-SAC

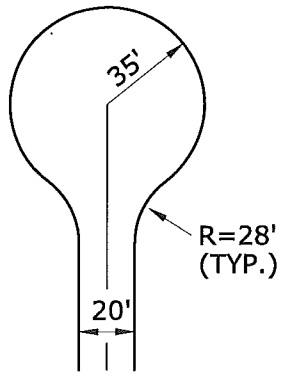

70' DIAMETER
CUL-DE-SAC

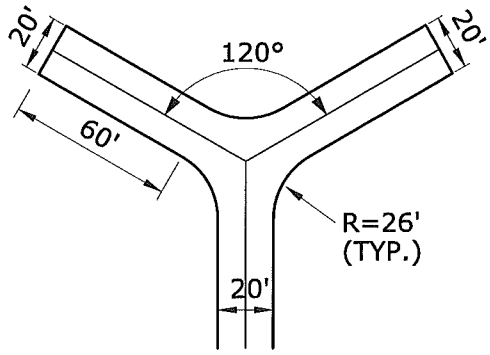

ACCEPTABLE ALTERNATIVE
TO 120' HAMMERHEAD

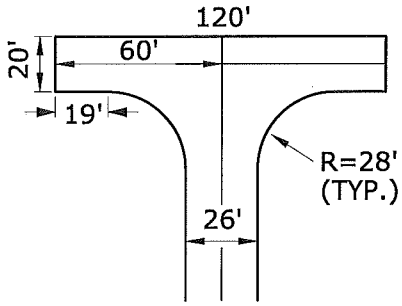

120' HAMMERHEAD

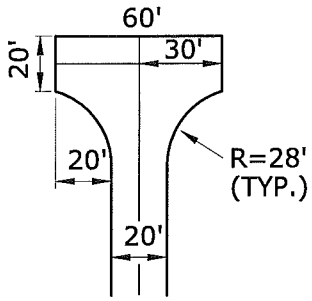

60' HAMMERHEAD

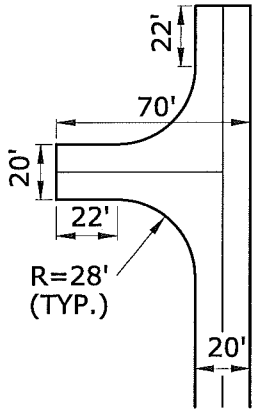

ACCEPTABLE ALTERNATIVE
TO 120' HAMMERHEAD

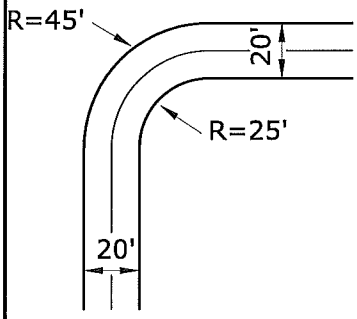

INSIDE AND OUTSIDE
TURN RADIUS

Requirements for dead end fire access roads

Length (feet)	Width (feet)	Turnarounds Required
0-150'	20'	None Required
151'-500'	20'	120' hammerhead, 60' "Y", or 96' diameter cul-de-sac
501'-750'	26'	120' hammerhead, 60' "Y", or 96' diameter cul-de-sac
OVER 750'	SPECIAL APPROVAL REQUIRED	

NOTES:

Where a fire hydrant is located on a fire apparatus access road, the minimum road width shall be 26 feet.

Road surfaces must be capable of supporting the imposed load of fire apparatus weighing at the least 75,000 pounds.

Fire apparatus access roads shall not exceed ten percent in grade. Grades steeper than ten percent must be approved by the Fire Marshal.

FIRE MARSHAL APPROVAL
OF CONSTRUCTION
PLANS REQUIRED

City of Newberg
PUBLIC WORKS ENGINEERING DIVISION
414 E. FIRST STREET NEWBERG, OREGON 97132
PHONE 503-537-1240 - FAX 503-537-1277

REVISIONS:

APPROVED FIRE DEPARTMENT TURN AROUNDS

SCALE:	N.T.S.
DATE:	JULY 2004
APPROVED BY:	D. Danicic
STANDARD DRAWING	529

EXHIBIT "B" TO
RESOLUTION NO. 2011-2936

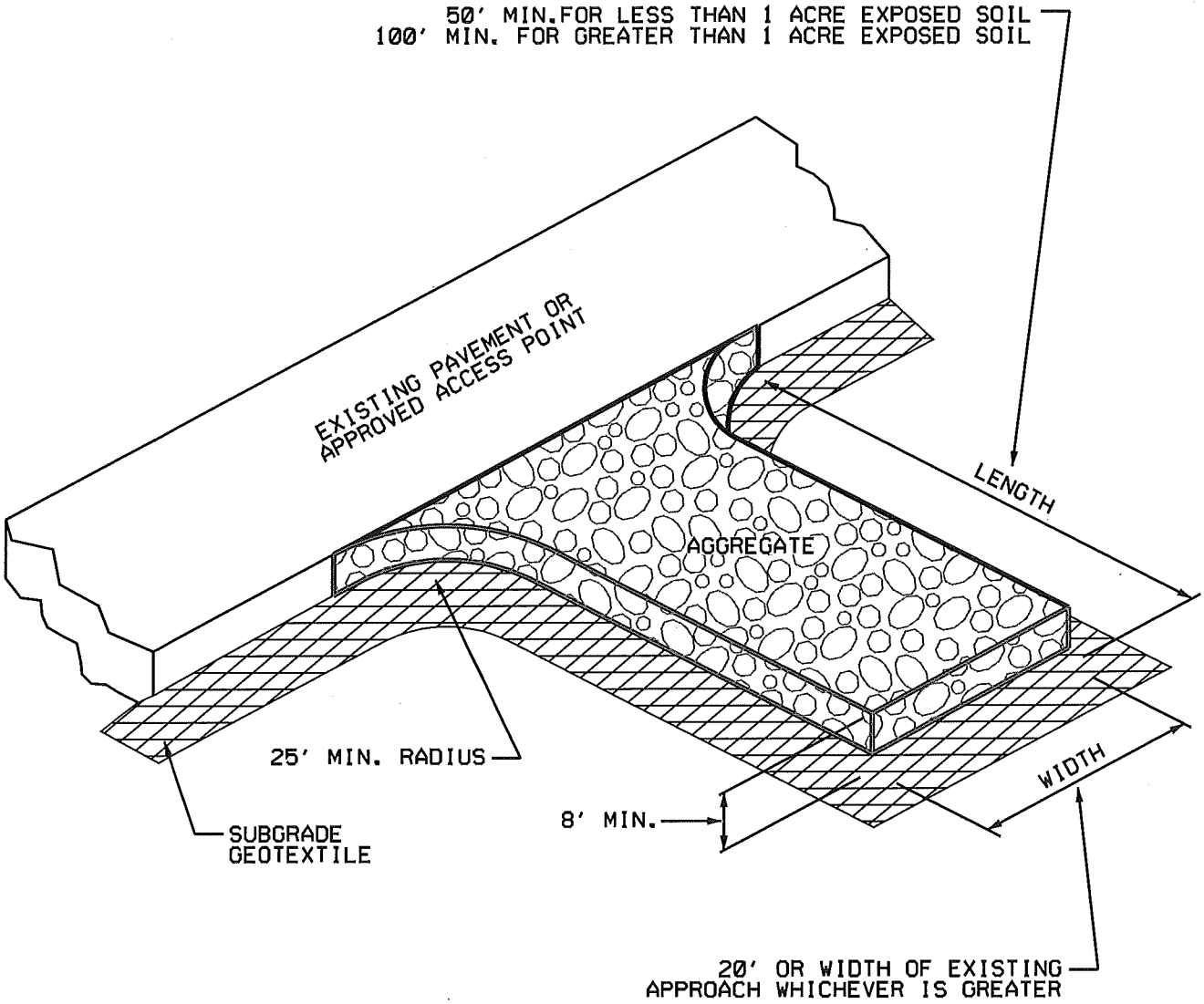

City of Newberg
PUBLIC WORKS ENGINEERING DIVISION
414 E. FIRST STREET NEWBERG, OREGON 97132

REVISIONS:

CONSTRUCTION ENTRANCE

SCALE:	N.T.S.
DATE:	May 2007
APPROVED BY:	D. Danicic
STANDARD DRAWING	601

EXHIBIT "B" TO
RESOLUTION NO. 2011-2936

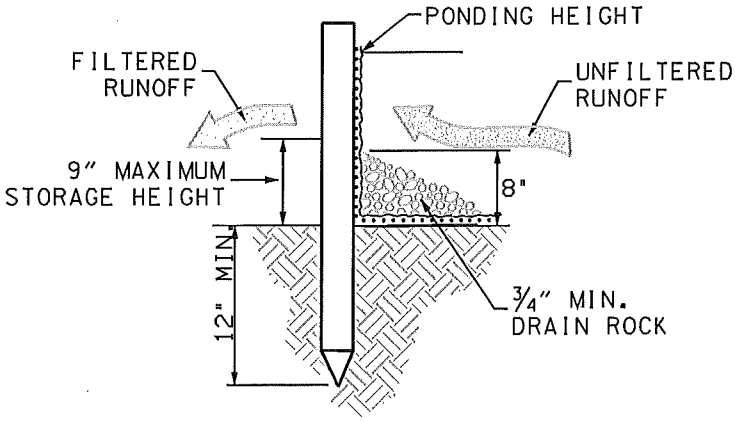

INSTALLATION WITHOUT TRENCHING

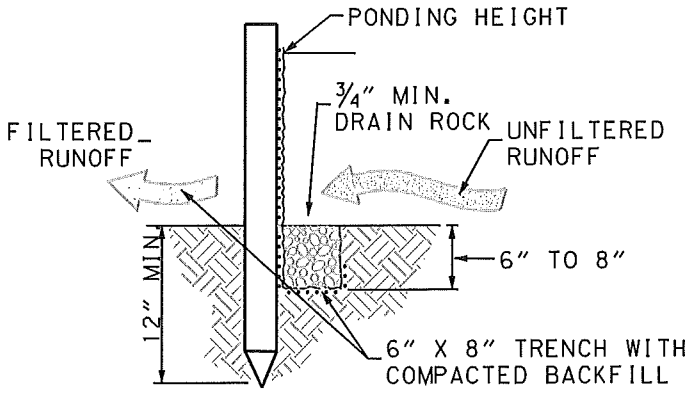

INSTALLATION WITH TRENCHING

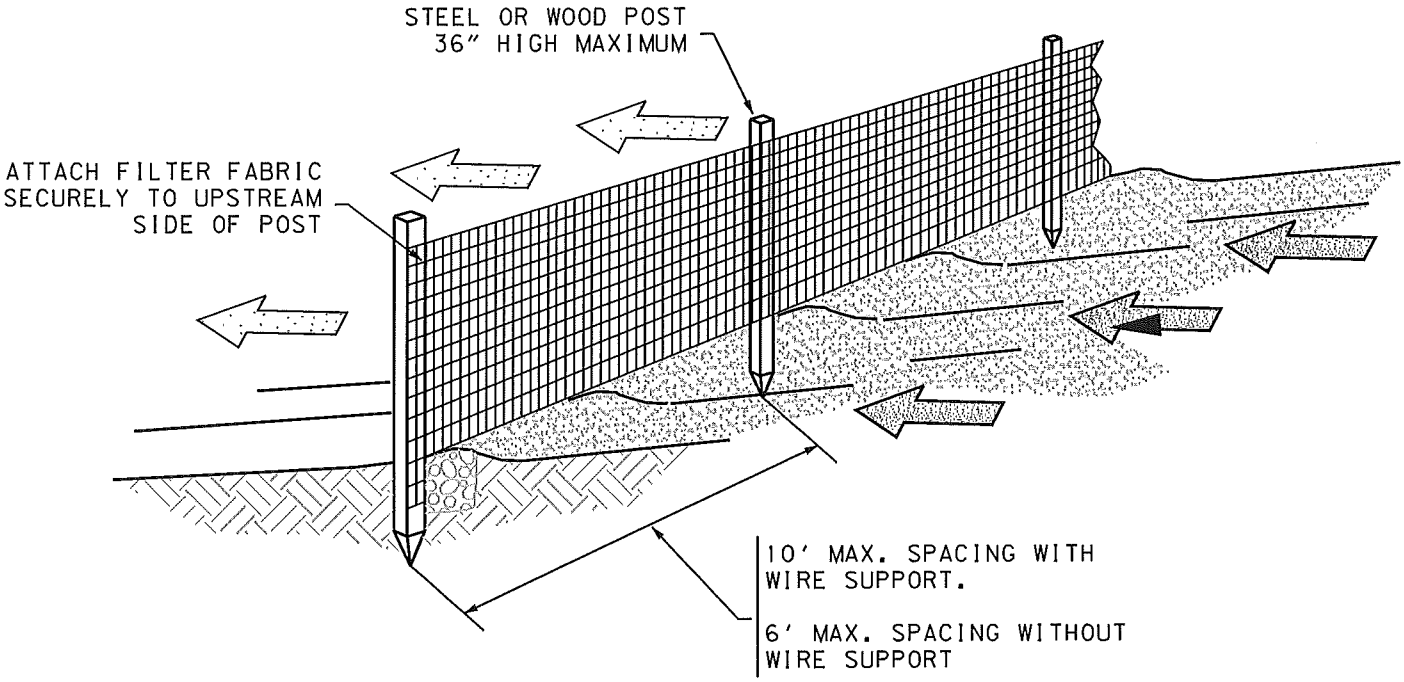

City of Newberg
PUBLIC WORKS ENGINEERING DIVISION
414 E. FIRST STREET NEWBERG, OREGON 97132

REVISIONS:

SILT FENCE

SCALE:	N.T.S.
DATE:	May 2007
APPROVED BY:	D. Danicic
STANDARD DRAWING	602

EXHIBIT "B" TO
RESOLUTION NO. 2011-2936

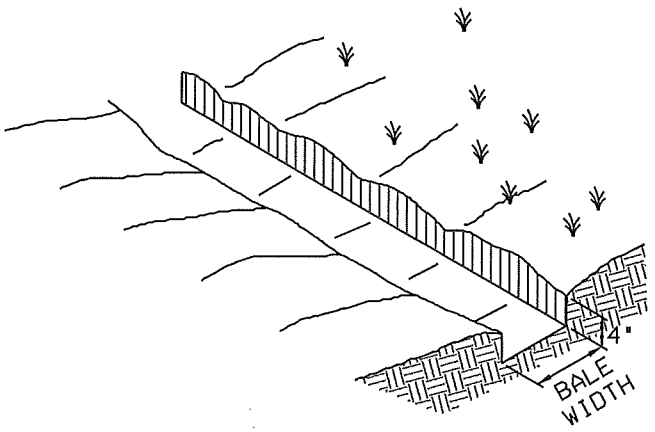

1. EXCAVATE TRENCH

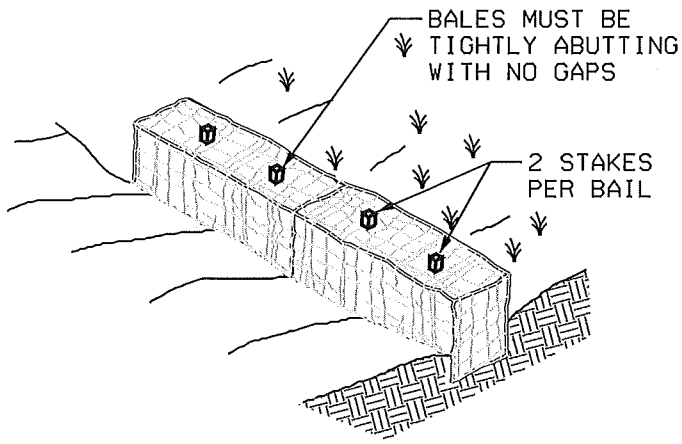

2. PLACE AND STAKE STRAW BALES

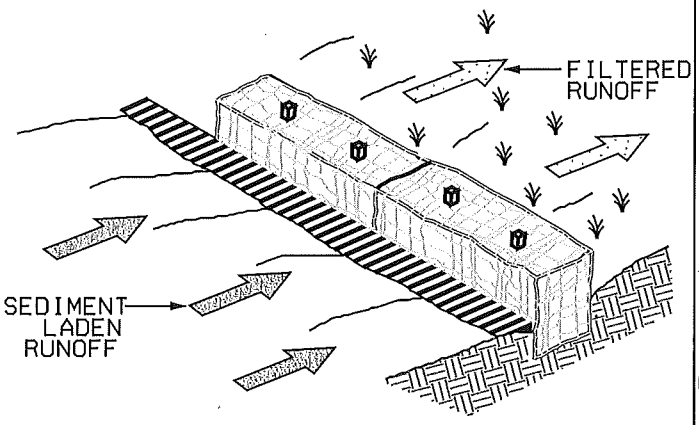

3. BACKFILL AND COMPACT THE EXCAVATED SOIL

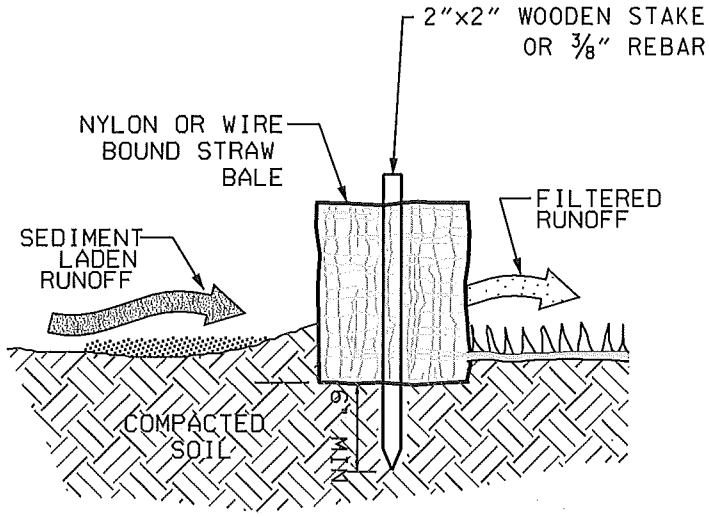

PROPERLY INSTALLED STRAW BALE

GENERAL NOTES:

1. EACH BALE SHALL BE EMBEDDED IN THE SOIL A MINIMUM OF 4''.
2. BALES SHALL BE SECURELY ANCHORED IN PLACE BY *'' REBAR OR 2"X2" WOODEN STAKES DRIVEN THROUGH THE BALES.
3. INSPECTION SHALL BE PERFORMED WEEKLY OR AFTER EACH RAINFALL EVENT. REPAIR AND OR REPLACEMENT SHALL BE MADE AS NEEDED BY THE CONTRACTOR, OR AS DIRECTED BY THE INSPECTOR.
4. WHEN SILT REACHES A DEPTH OF 6", IT SHALL BE REMOVED AND DISPOSED OF IN AN APPROVED SITE.
5. AFTER THE SITE IS COMPLETELY STABILIZED, THE BALE AND ACCUMULATED SILT SHALL BE REMOVED AND DISPOSED OF AT AN APPROVED DISPOSAL SITE.

City of Newberg
PUBLIC WORKS ENGINEERING DIVISION
414 E. FIRST STREET NEWBERG, OREGON 97132

REVISIONS:

STRAW BALE BARRIER

SCALE:	N.T.S.
DATE:	May 2007
APPROVED BY:	D. Danicic
STANDARD DRAWING	603

EXHIBIT "B" TO
RESOLUTION NO. 2011-2936

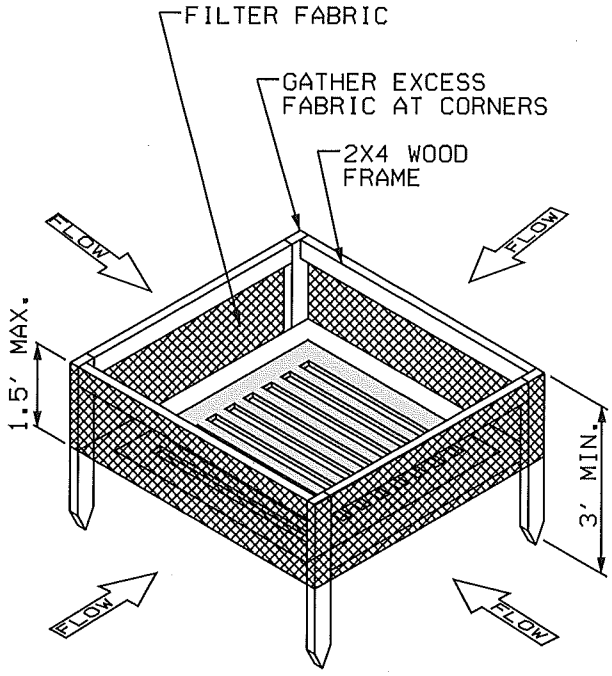

STRAW BALES ARE TO BE PLACED 4 INCHES INTO THE SOIL. TIGHTLY ABUTTING WITH NO GAP. STAKE AND BACKFILL AROUND THE ENTIRE OUTSIDE PERIMETER.

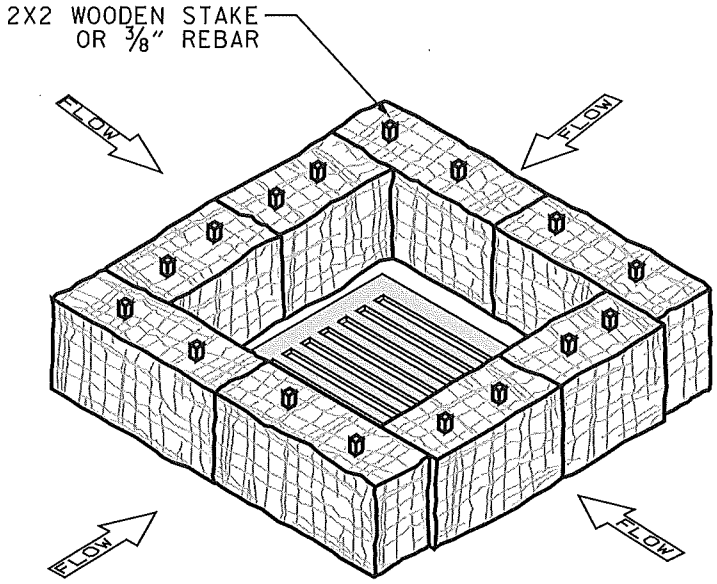

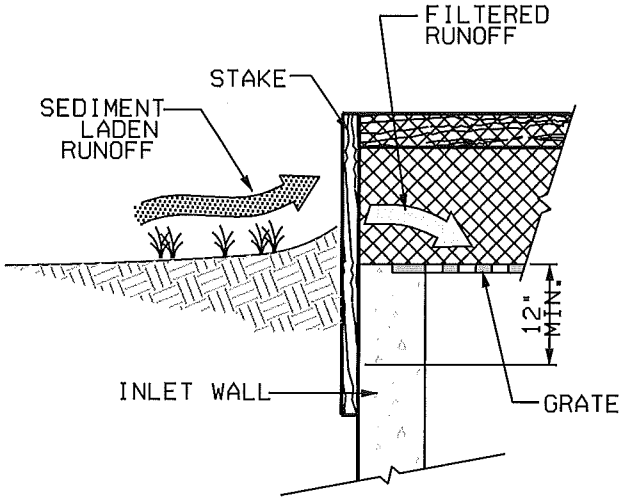

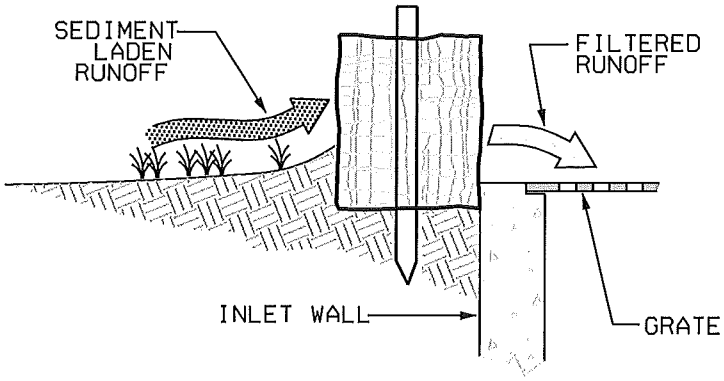

THIS METHOD OF INLET PROTECTION IS TO BE USED WHERE THE INLET DRAIN IS LOCATED IN A RELATIVELY FLAT UNPAVED AREA (SLOPE <5%).

THIS METHOD OF INLET PROTECTION SHALL NOT BE USED IN STREETS, TRAVELED AREAS, OR AREAS OF CONCENTRATED FLOW (DITCHES).

City of Newberg
PUBLIC WORKS ENGINEERING DIVISION
414 E. FIRST STREET NEWBERG, OREGON 97132

REVISIONS:

FIELD DRAIN INLET PROTECTION

SCALE:	N.T.S.
DATE:	May 2007
APPROVED BY:	D. Danicic
STANDARD DRAWING	604

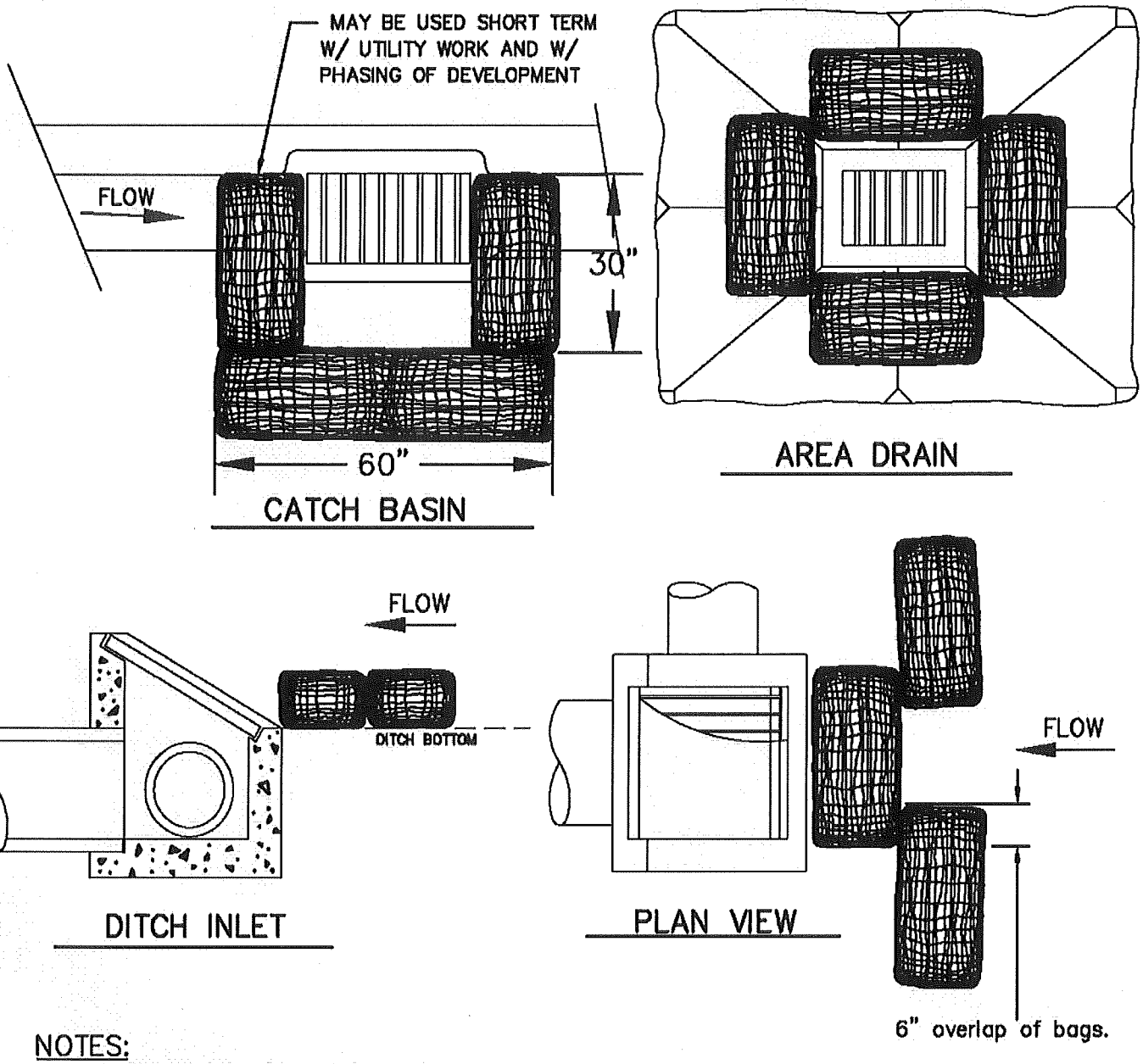

NOTES:

1. ADDITIONAL MEASURES MUST BE CONSIDERED DEPENDING ON SOIL TYPES.

2. BIO-FILTER BAGS SHOULD BE STAKED WHERE APPLICABLE USING (2) 1"x2"WOODEN STAKES OR APPROVED EQUAL PER BAG.

3. WHEN USING 30" BIO-BAGS TO PROTECT A CATCH BASIN YOU MUST HAVE 4 BAGS AND THEY SHALL BE OVERLAPPED BY 6".

City of Newberg PUBLIC WORKS ENGINEERING DIVISION 414 E. FIRST STREET NEWBERG, OREGON 97132 PHONE 503-537-1240 - FAX 503-537-1277	REVISIONS:	INLET PROTECTION	SCALE: N.T.S. DATE: 04/04/2009 APPROVED BY: PAUL CHIU STANDARD DRAWING 605

EXHIBIT "C" TO
RESOLUTION NO. 2011-2936

City of Newberg

STANDARD DRAWINGS

ENGINEERING DIVISION
JUNE 2000

PE
City Engineer

EXHIBIT "C" TO
RESOLUTION NO. 2011-2936

City of Newberg
Standard Drawings

Table of Contents

General Information	100 series
Reserved for future use	101
Reserved for future use	102
Tree & Shrub Clearances	103
Utility Service Locations	104
Utilities Plan	105
Bollard	106
Sanitary Sewer	200 series
Trench Backfill	201
Pipe Bedding	202
Manhole Base	203
Standard Manhole	204
Shallow Manhole	205
Drop Manhole	206
Offset Manhole	207
Manhole Frame and Cover	208
Clean out	209
Service Branch	210
Traffic Box	211
Inside Drop Manhole	212
Manhole Abandonment	213
Manhole Removal	214
Water	300 series
Water Pipe Bedding	301
Thrust Blocking	302
Vertical Thrust Blocking	303
Straddle Block	304
Water Tapping Sleeves	305
Valve Box Assembly	306
Valve Box and Cover	307
3/4" and 1" Water Service	308
Double water Service	309
1 1/2" and 2" Water Service	310
Water Line Crossings	311
Blow-Off Assembly	312
Fire Hydrant Assembly	313
Valve Locations and Spacing	314
Combination Air-Vacuum Assembly	315

Reduced Pressure Backflow Device (Above Ground)	316
Reduced Pressure Backflow Device (Below Ground)	317
Cathodic Protection	318
Vault and Water Service	319
Holding Spool - Mechanical Joint	320
Storm Sewer	Series 400
Catch Basin	401
Catch Basin Frame and Grate	402
Ditch Interceptor	403
Ditch Interceptor Frame and Grate	404
Valley Gutter Catch Basin	405
Ditch Interceptor Type "B"	406
Ditch Interceptor Type "B" Grate	407
Pelican Catch Basin	408
Street	Series 500
Curb and Gutter	501
Curb - Type "C"	502
Sidewalk - Type "A"	503
Sidewalk - Type "B"	504
Curb Ramp Locations	505
Sidewalk Ramp - Type "A" Sidewalk	506
Sidewalk Ramp - Type "B" Sidewalk	507
Driveway Apron - Curb Cut - Type "A" Sidewalk	508
Driveway Apron - Curb Cut - Type "B" Sidewalk	509
Commercial Driveway	510
Cul-de-sac	511
Residential Street - Cross Section	512
Interim Street	513
Intersection Paving Plan	514
Street Monumentation	515
Street Barricade	516
Trench Paving	517
Manhole Adjustment	518
Pavement Seal Coat	519
Rain Drain - Curb Cut	520
Sign Clearances	521
Street Light	522
Street Sign and Post Location	523
Street Hump	524
Asphalt Overlay - Typical Section	525
Street Planing	526
Asphalt Pavement Repair	527
Industrial Driveway	528

EXHIBIT "C" TO
RESOLUTION NO. 2011-2936

Forms

- Manhole Vacuum Test Nomograph
- Sanitary Sewer Air Test Nomograph
- Water Main Pressure Test Report

STDDRAW.WPS

EXHIBIT "C" TO
RESOLUTION NO. 2011-2936

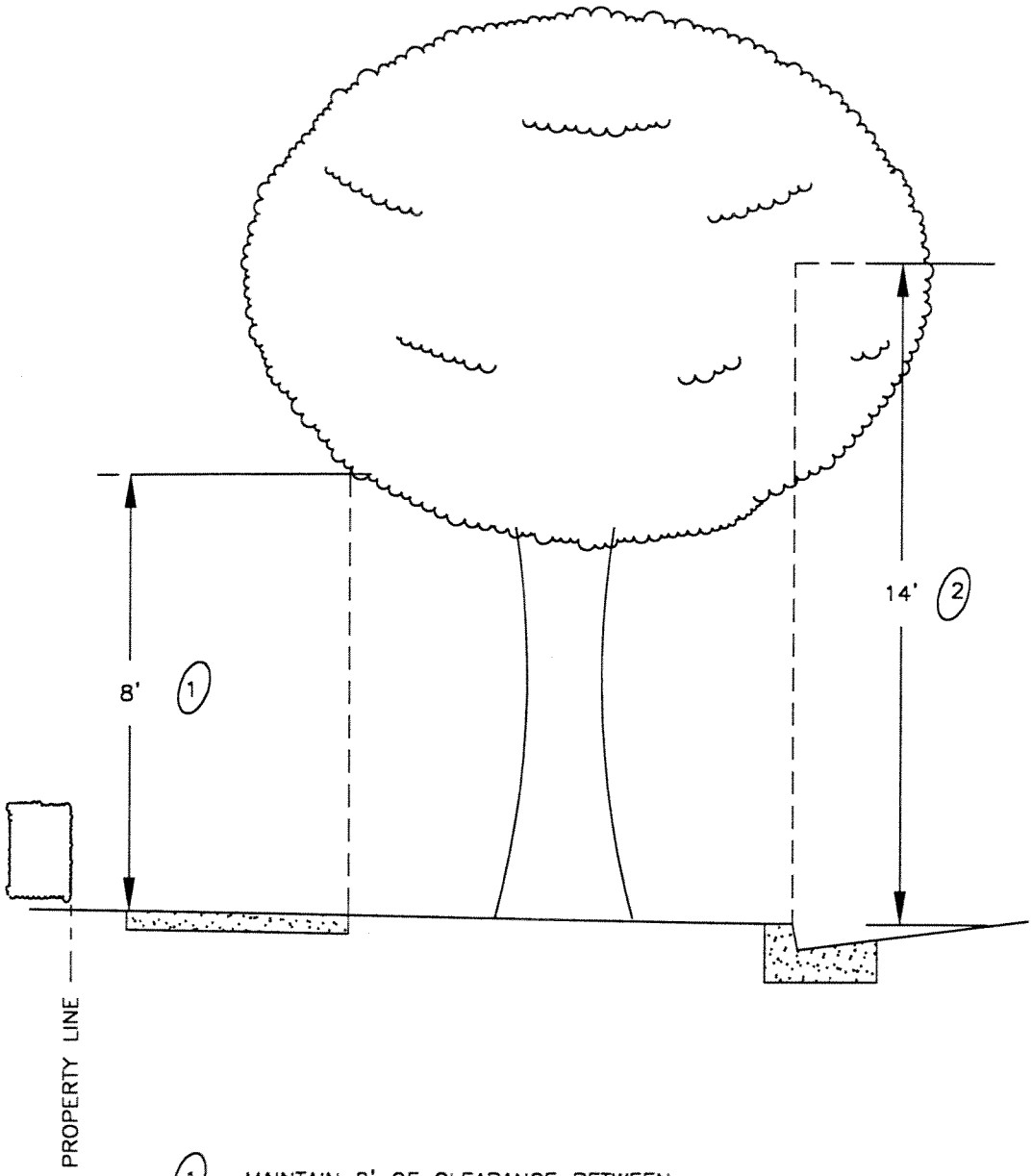

1 MAINTAIN 8' OF CLEARANCE BETWEEN SIDEWALK AND TREE LIMBS.

2 MAINTAIN 14' OF CLEARANCE BETWEEN STREET GRADE AND TREE LIMBS.

City of Newberg
414 E. FIRST STREET
NEWBERG, OREGON 97132

TREE & SHRUB CLEARANCES

SCALE: N.T.S.	
DATE:	JUNE 2000
APP. BY:	L. ANDERSON
STANDARD DRAWING	103

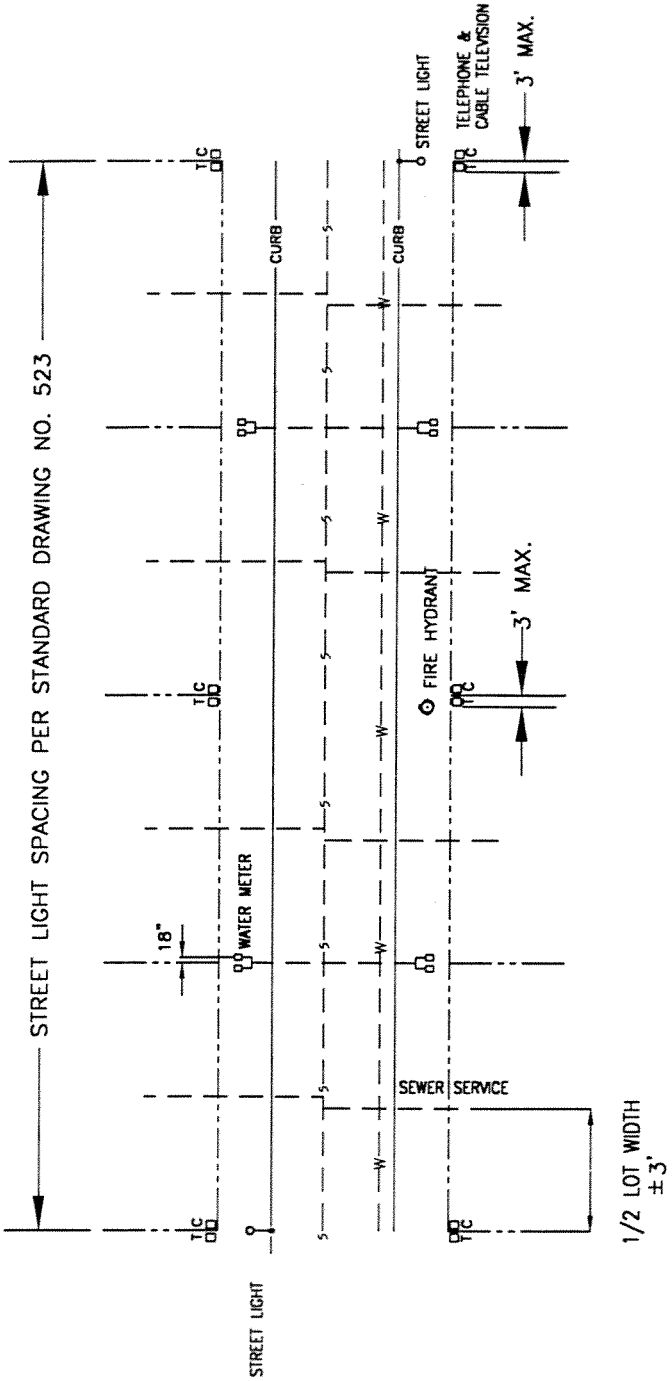

NOTES
1. ALL ABOVE GROUND FIXTURES ARE TO BE ALIGNED WITH PROPERTY LINE WITHIN TOLERANCES SHOWN.
2. VARIATION FROM THIS STANDARD ALLOWED ONLY WITH THE APPROVAL OF THE CITY ENGINEER.
3. THE LOCATION OF UNDERGROUND UTILITIES IS SHOWN ON STANDARD DRAWING 105, UTILITIES PLAN.

City of Newberg
414 E. FIRST STREET
NEWBERG, OREGON 97132

UTILITY SERVICE LOCATIONS

SCALE: N.T.S.	
DATE: JUNE 2000	
APP. BY: L. ANDERSON	
STANDARD DRAWING	104

EXHIBIT "C" TO RESOLUTION NO. 2011-2936

A	B	C	D	E	F	G	H	I	J	K
STREET WIDTH	ROW WIDTH	WATER	SANITARY SEWER	STORM SEWER	STREET LIGHT	UNDERGROUND UTILITIES	GAS	FIRE HYDRANT	PEDESTALS	TRANSFORMER
32'	54'-60'	12'	4'	11'	19'	32'	32'	19'	31'	32'
34'	60'	13'	4'	12'	20'	32'	32'	20'	31'	32'
36'	60'	12'	4'	13'	21'	32'	32'	21'	31'	32'
40'	70'	15'	4'	15'	23'	32'	37'	23'	36'	32'
46'	80'	18'	4'	18'	26'	42'	42'	26'	41'	32'
70'	100'	25'-30'	4'	30'	38'	52'	52'	38'	32'	32'

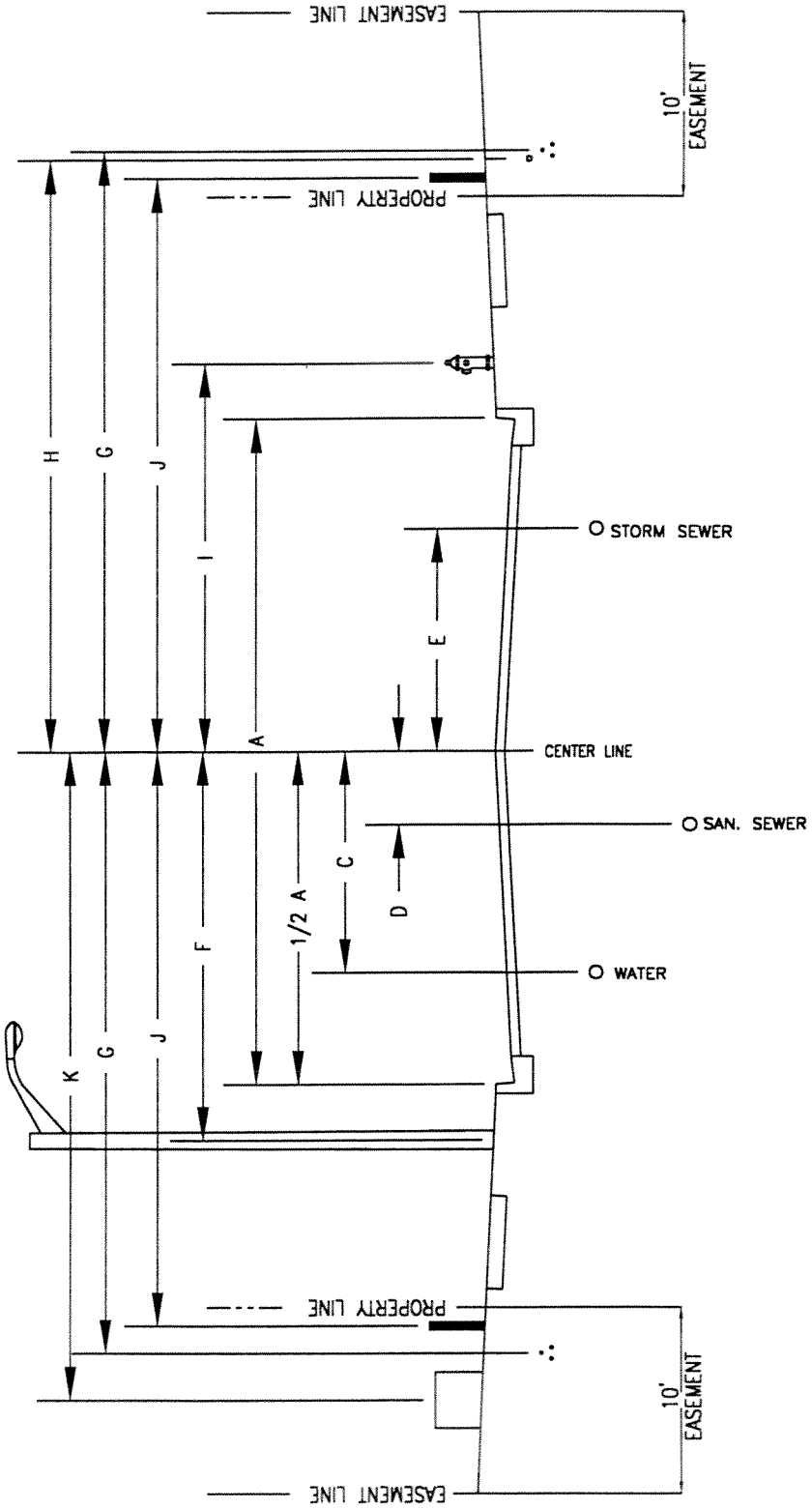

City of Newberg
414 E. FIRST STREET
NEWBERG, OREGON 97132

UTILITIES PLAN

SCALE: N.T.S.
DATE: JUNE 2000
APP. BY: L. ANDERSON
STANDARD DRAWING 105

EXHIBIT "C" TO
RESOLUTION NO. 2011-2936

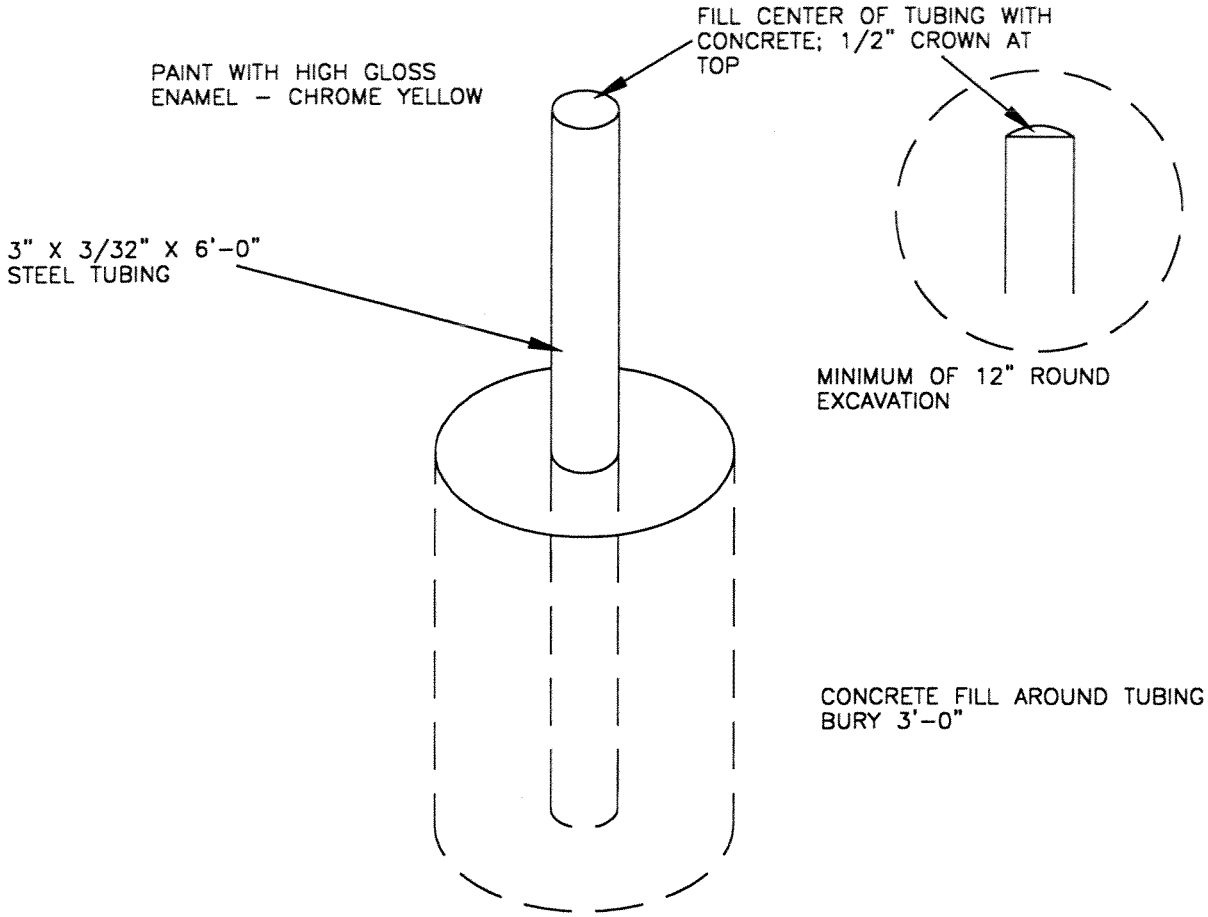

City of Newberg 414 E. FIRST STREET NEWBERG, OREGON 97132	BOLLARD	SCALE: N.T.S. DATE: JUNE 2000 APP. BY: L. ANDERSON STANDARD DRAWING 106

EXHIBIT "C" TO RESOLUTION NO. 2011-2936

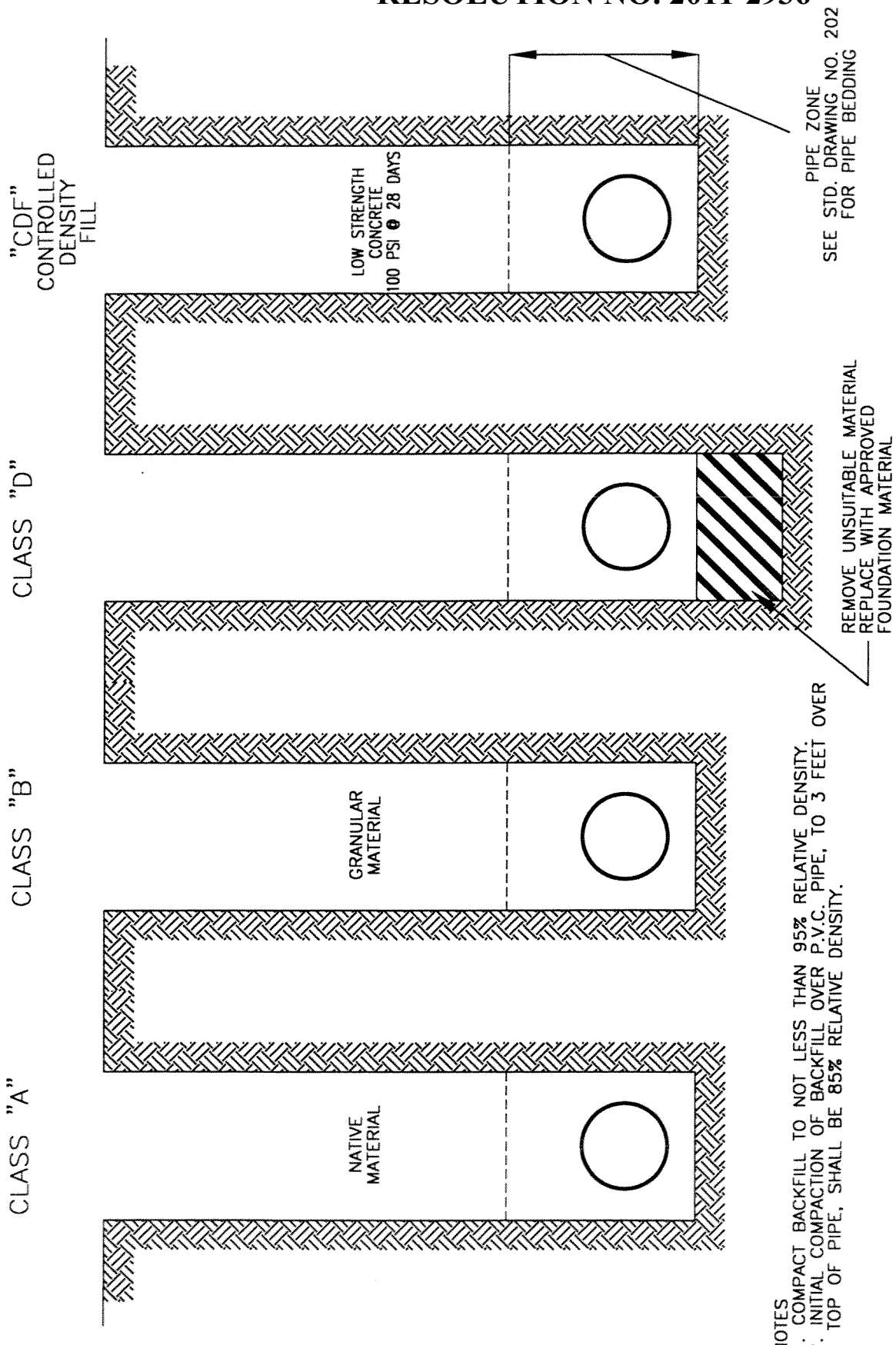

NOTES
1. COMPACT BACKFILL TO NOT LESS THAN 95% RELATIVE DENSITY.
2. INITIAL COMPACTION OF BACKFILL OVER P.V.C. PIPE, TO 3 FEET OVER TOP OF PIPE, SHALL BE 85% RELATIVE DENSITY.

City of Newberg
414 E. FIRST STREET
NEWBERG, OREGON 97132

TRENCH BACKFILL

SCALE: N.T.S.	
DATE:	JUNE 2000
APP. BY:	L. ANDERSON
STANDARD DRAWING	201

EXHIBIT "C" TO
RESOLUTION NO. 2011-2936

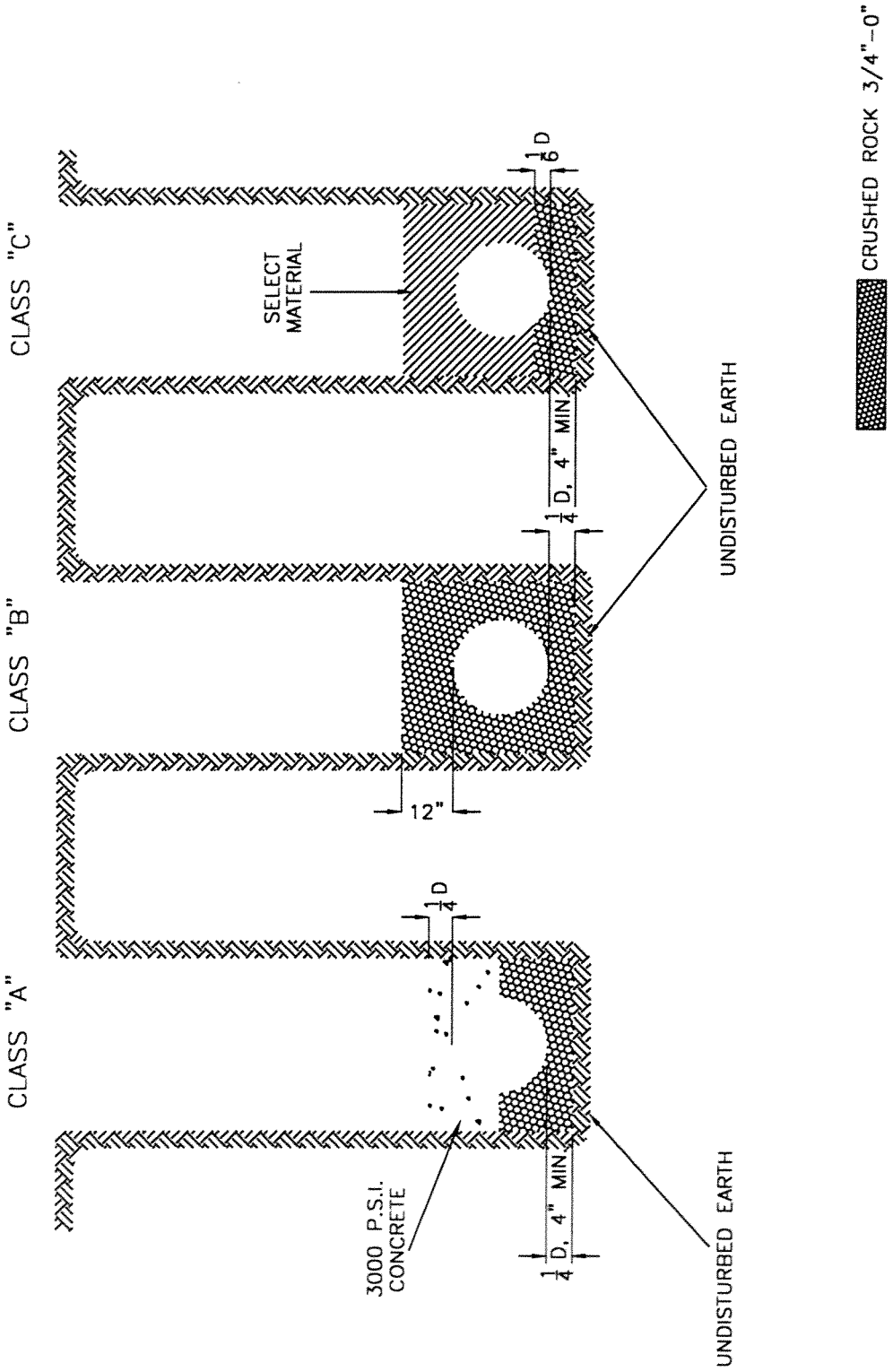

City of Newberg, OR
414 E. FIRST STREET
NEWBERG, OREGON 97132

PIPE BEDDING

SCALE: N.T.S.	
DATE:	JUNE 2000
APP. BY:	L. ANDERSON
STANDARD DRAWING	202

EXHIBIT "C" TO
RESOLUTION NO. 2011-2936

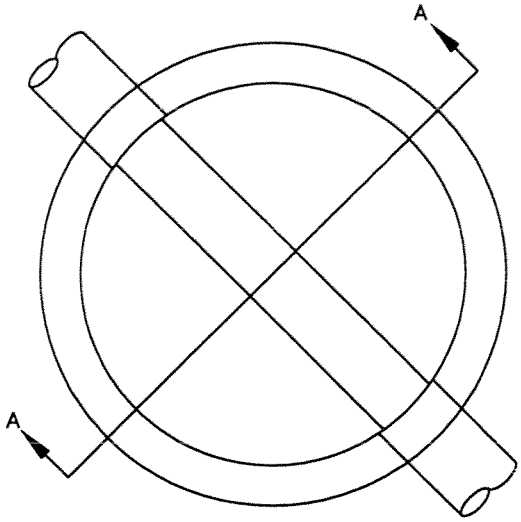

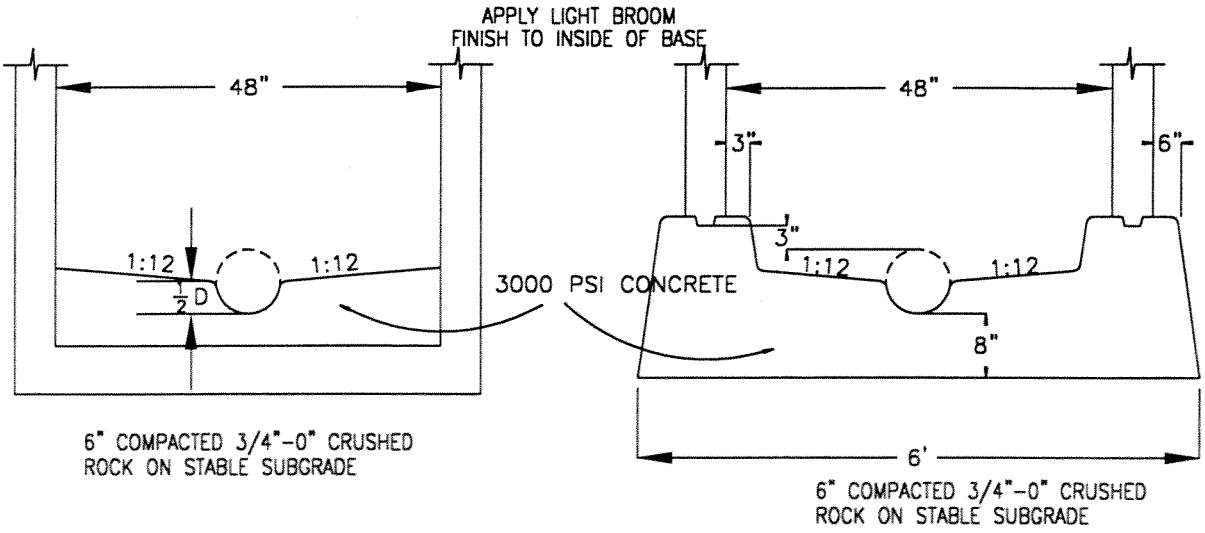

PRECAST BASE

POURED IN PLACE BASE

City of Newberg
414 E. FIRST STREET
NEWBERG, OREGON 97132

MANHOLE BASE

SCALE: N.T.S.	
DATE:	
APP. BY:	L. ANDERSON
STANDARD DRAWING	203

EXHIBIT "C" TO
RESOLUTION NO. 2011-2936

NOTES
1. STANDARD 48" MANHOLE TO BE USED FOR PIPES 24" AND LESS.
2. PRECAST CONCRETE STRUCTURES SHALL HAVE STRENGTH OF 4000 PSI.
3. STANDARD MANHOLE DEPTH = 8' TOP OF FRAME TO INVERT.
4. LATERAL LINES TO MATCH TOP OF INLET PIPE AT MANHOLE.
5. ALL INTERIOR JOINTS AND CONNECTIONS SHALL BE WATER TIGHT, AND GROUTED WITH NON-SHRINK GROUT.
6. ALL MANHOLES SHALL BE VACUUM TESTED PRIOR TO ACCEPTANCE.
7. BOND ALL MANHOLE SECTION GROOVES WITH MASTIC SEAL.

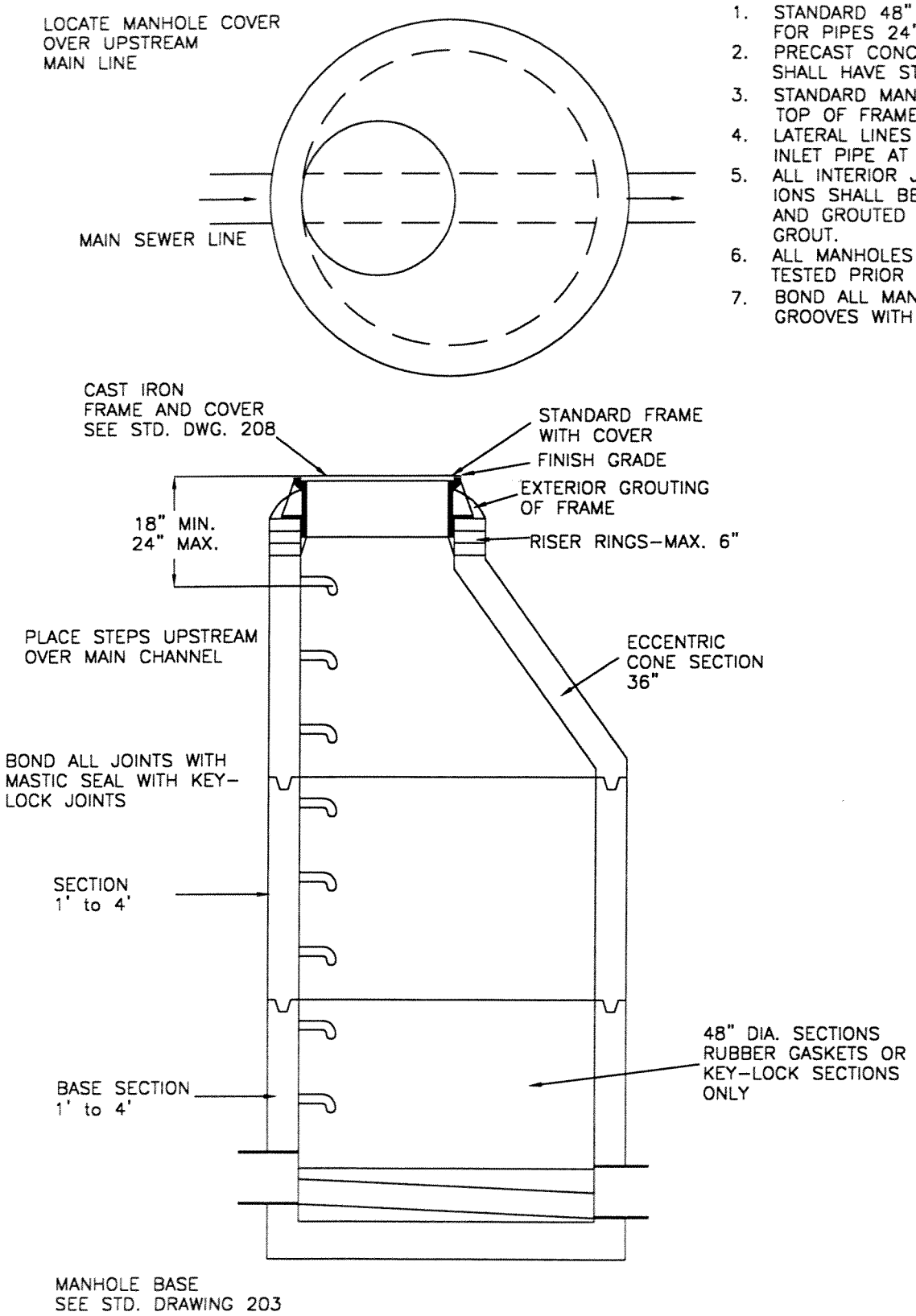

City of Newberg
414 E. FIRST STREET
NEWBERG, OREGON 97132

48"
STANDARD MANHOLE

SCALE: N.T.S.	
DATE:	JUNE 2000
APP. BY:	L. ANDERSON
STANDARD DRAWING	204

EXHIBIT "C" TO
RESOLUTION NO. 2011-2936

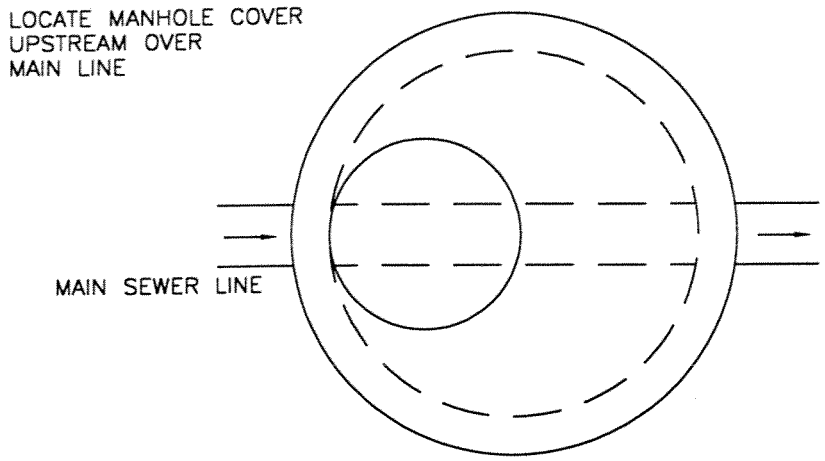

NOTES
1. STANDARD MANHOLE TO BE USED FOR PIPES 24" AND LESS.
2. PRECAST CONCRETE STRUCTURES SHALL HAVE STRENGTH OF 4000 PSI.
3. STANDARD MANHOLE DEPTH = 8' TOP OF FRAME TO INVERT.
4. LATERAL LINES TO MATCH TOP OF INLET PIPE AT MANHOLE.
5. ALL INTERIOR JOINTS AND CONNECTIONS SHALL BE WATER TIGHT, AND GROUTED WITH NON-SHRINK GROUT.
6. ALL MANHOLES SHALL BE VACUUM TESTED PRIOR TO ACCEPTANCE.
7. BOND ALL MANHOLE SECTION GROOVES WITH MASTIC SEAL.

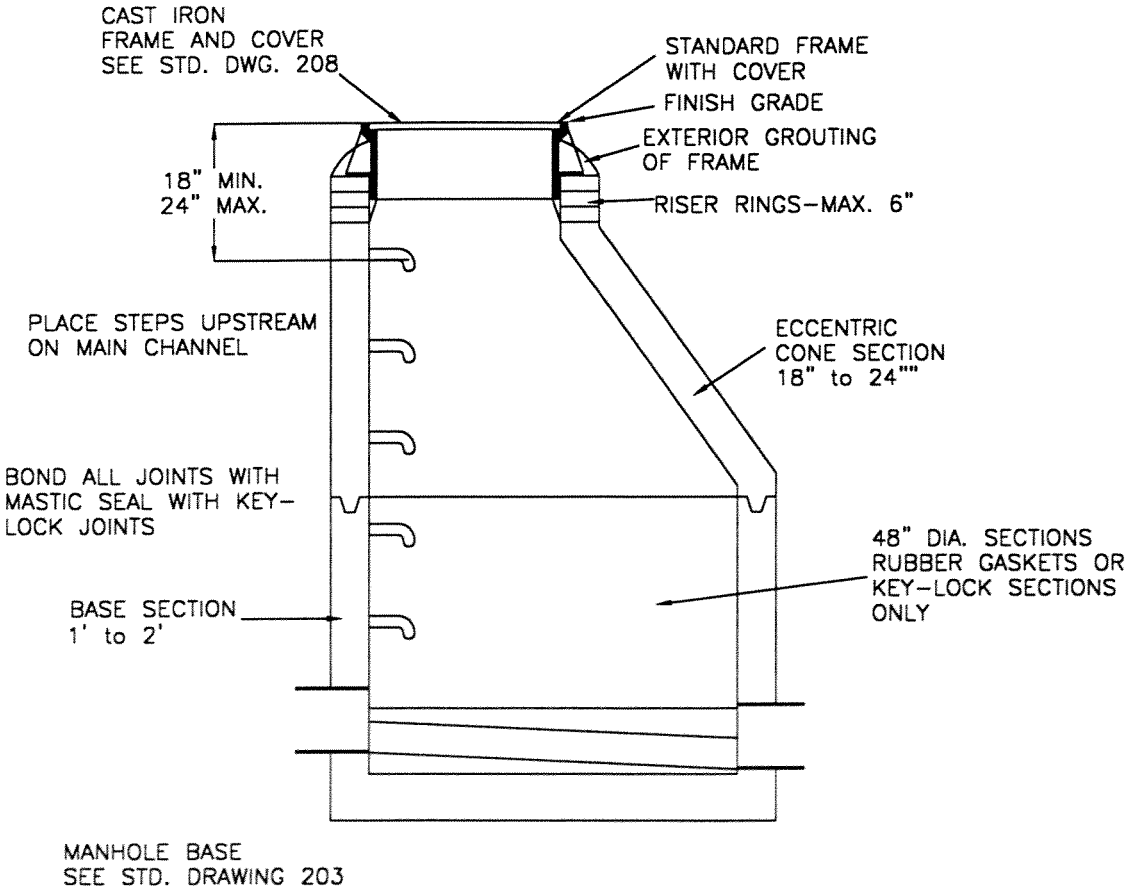

City of Newberg
414 E. FIRST STREET
NEWBERG, OREGON 97132

SHALLOW MANHOLE

SCALE: N.T.S.	
DATE:	JUNE 2000
APP. BY:	L. ANDERSON
STANDARD DRAWING	205

EXHIBIT "C" TO
RESOLUTION NO. 2011-2936

NOTES
1. STANDARD MANHOLE TO BE USED FOR PIPES 24" AND LESS.
2. PRECAST CONCRETE STRUCTURES SHALL HAVE STRENGTH OF 4000 PSI.
3. STANDARD MANHOLE DEPTH = 8' TOP OF FRAME TO INVERT.
4. LATERAL LINES TO MATCH TOP OF INLET PIPE AT MANHOLE.
5. ALL INTERIOR JOINTS AND CONNECTIONS SHALL BE WATER TIGHT, AND GROUTED WITH NON-SHRINK GROUT.
6. ALL MANHOLES SHALL BE VACUUM TESTED PRIOR TO ACCEPTANCE.
7. BOND ALL MANHOLE SECTION GROOVES WITH MASTIC SEAL.

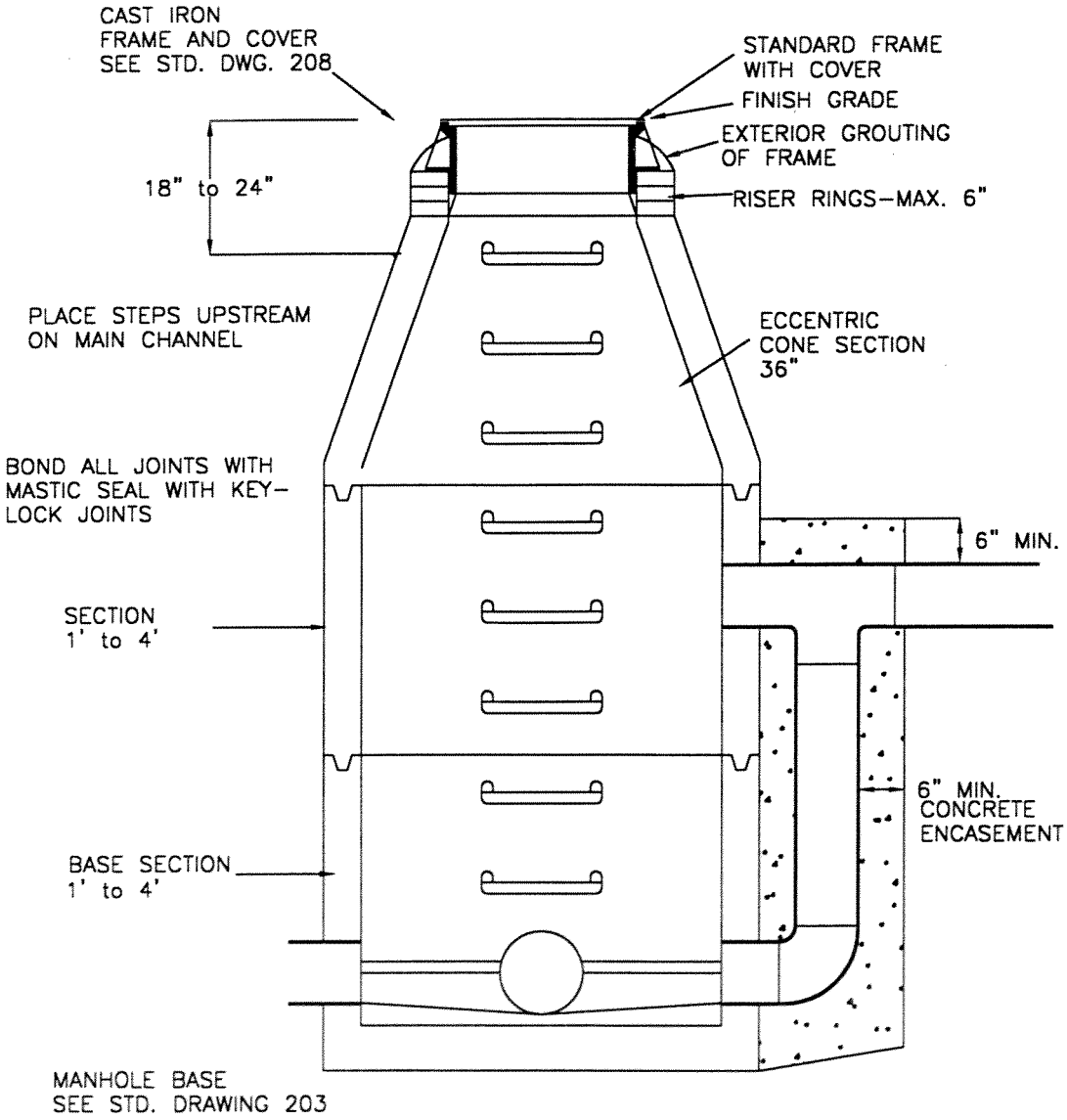

City of Newberg
414 E. FIRST STREET
NEWBERG, OREGON 97132

DROP MANHOLE

SCALE: N.T.S.	
DATE:	JUNE 2000
APP. BY:	L. ANDERSON
STANDARD DRAWING	206

EXHIBIT "C" TO
RESOLUTION NO. 2011-2936

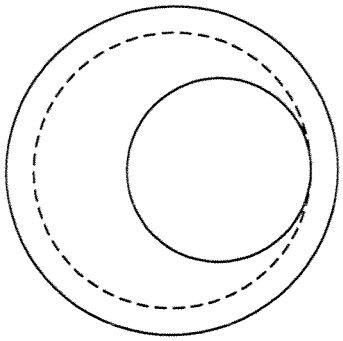

NOTES
1. ALL CONCRETE SHALL HAVE STRENGTH OF 3000 PSI AT 28 DAYS.
2. MANHOLE TO BE USED FOR PIPE SIZES 24" AND GREATER.

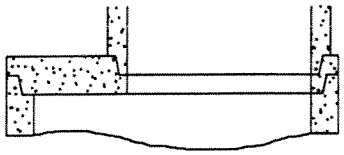

72" to 48"
REDUCING SLAB

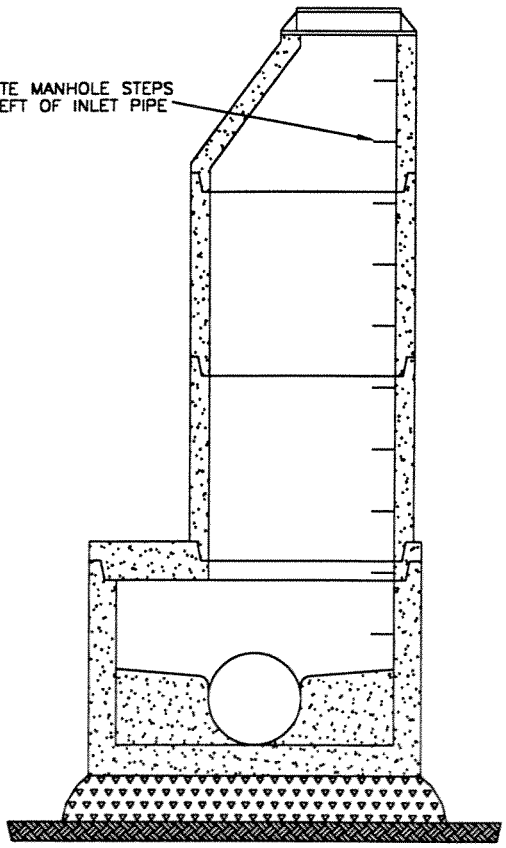

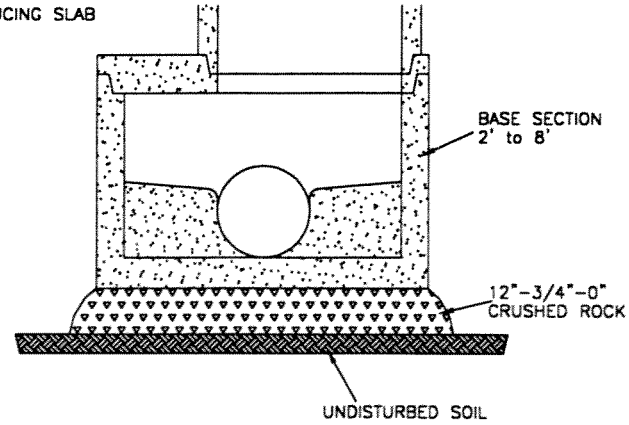

City of Newberg
414 E. FIRST STREET
NEWBERG, OREGON 97132

OFFSET MANHOLE

SCALE: N.T.S.	
DATE:	JUNE 2000
APP. BY:	L. ANDERSON
STANDARD DRAWING	207

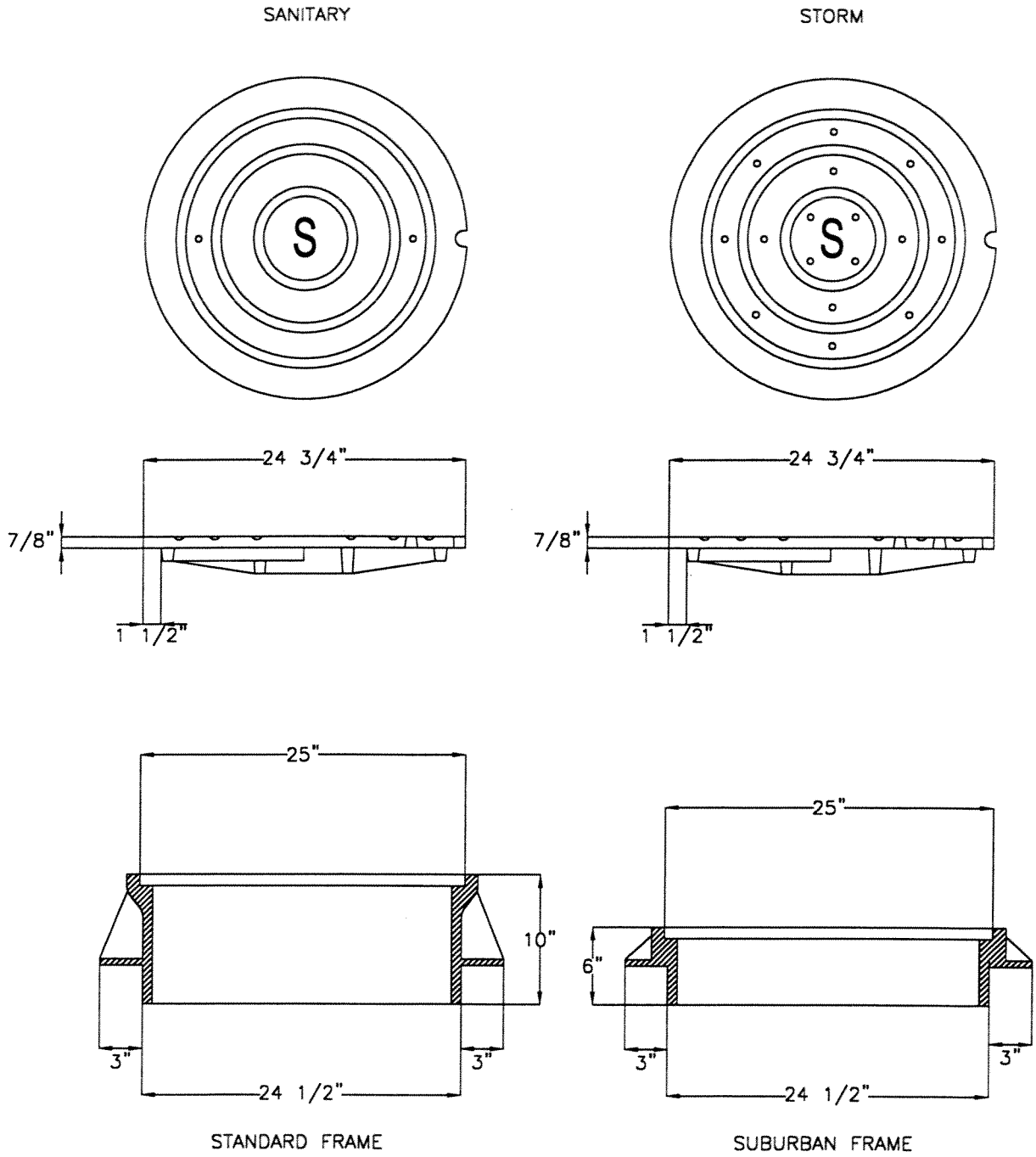

NOTES

1. USE SUBURBAN TYPE FRAME IN NON-TRAFFIC AREAS ONLY.
2. COVER AND FRAME SHALL BE CAST IRON, ASTM A-48 CLASS 30 AND MEET H-20 LOAD RATING.
3. COVER AND FRAME TO HAVE TRUE BEARING ALL AROUND.

City of Newberg
414 E. FIRST STREET
NEWBERG, OREGON 97132

MANHOLE FRAME AND COVER

SCALE: N.T.S.	
DATE:	JUNE 2000
APP. BY:	L. ANDERSON
STANDARD DRAWING	208

EXHIBIT "C" TO
RESOLUTION NO. 2011-2936

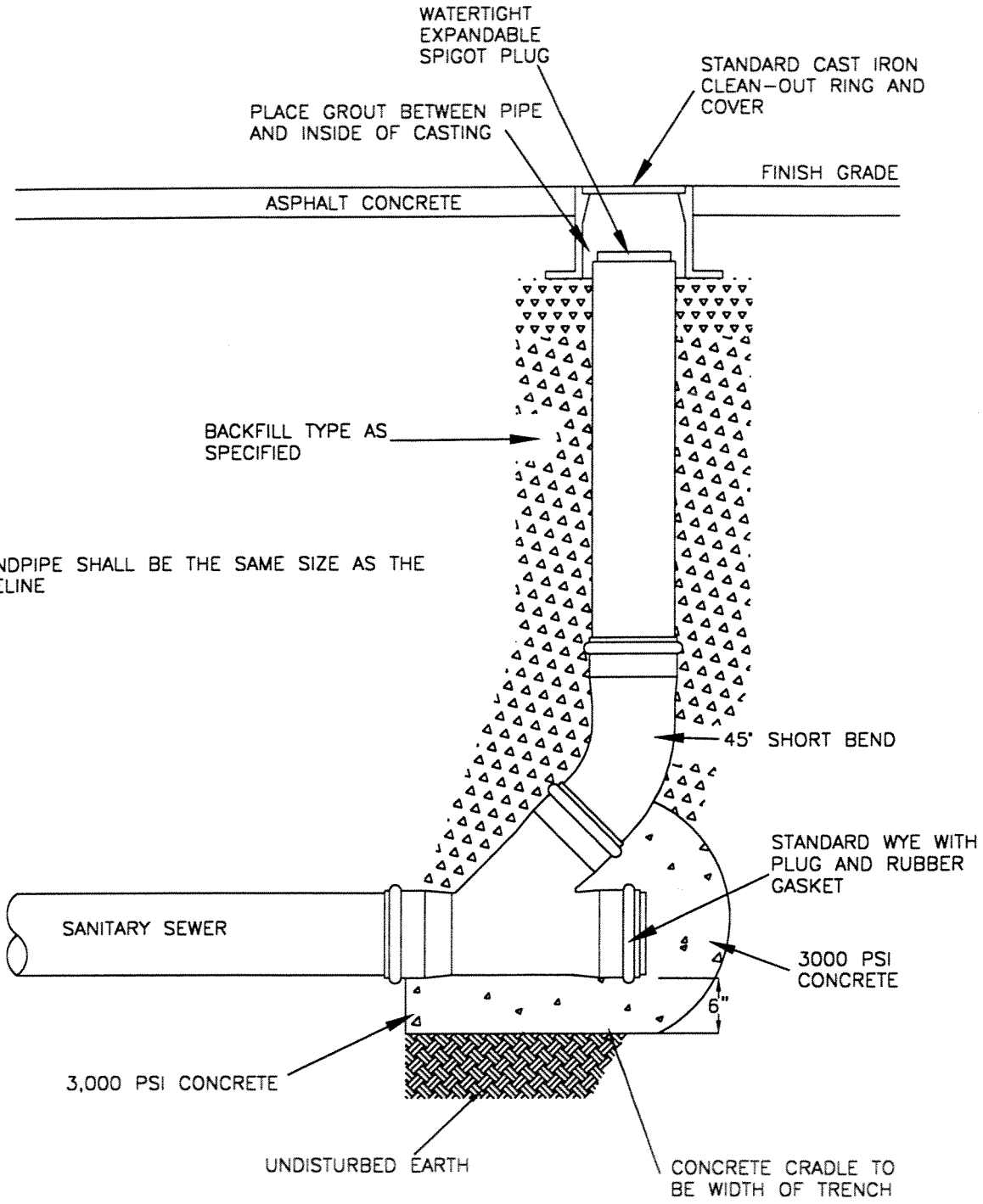

NOTES
1. STANDPIPE SHALL BE THE SAME SIZE AS THE PIPELINE

City of Newberg
414 E. FIRST STREET
NEWBERG, OREGON 97132

CLEAN OUT

SCALE: N.T.S.	
DATE:	JUNE 2000
APP. BY:	L. ANDERSON
STANDARD DRAWING	209

EXHIBIT "C" TO
RESOLUTION NO. 2011-2936

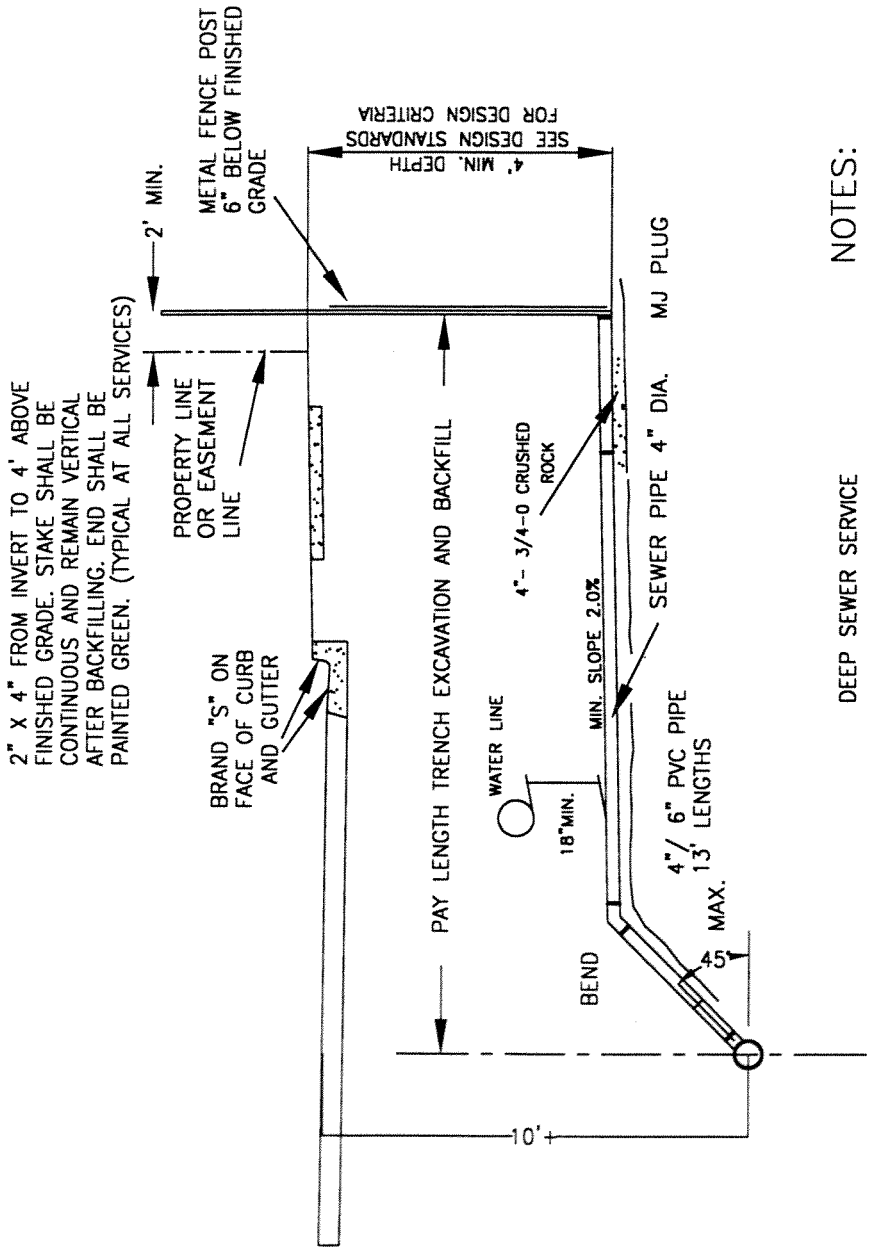

NOTES:

1. USES – SINGLE RESIDENTIAL SERVICE – 4" PIPE
   SPLIT RESIDENTIAL SERVICE WITH CLEAN OUT – 6" PIPE
   COMMERCIAL / INDUSTRIAL – 6" PIPE
2. SCHEME FOR HOUSE SERVICE TO BE DETERMINED BY INSPECTOR IN FIELD IN CASE OF CONFLICT WITH PLANS.
3. SERVICE SHALL NOT BE BACKFILLED PRIOR TO INSPECTION.
4. MINIMUM SLOPE –2%.

City of Newberg OR

414 E. FIRST STREET
NEWBERG, OREGON 97132

SERVICE BRANCH

SCALE: N.T.S.	
DATE:	JUNE 2000
APP. BY:	L. ANDERSON
STANDARD DRAWING	210

EXHIBIT "C" TO
RESOLUTION NO. 2011-2936

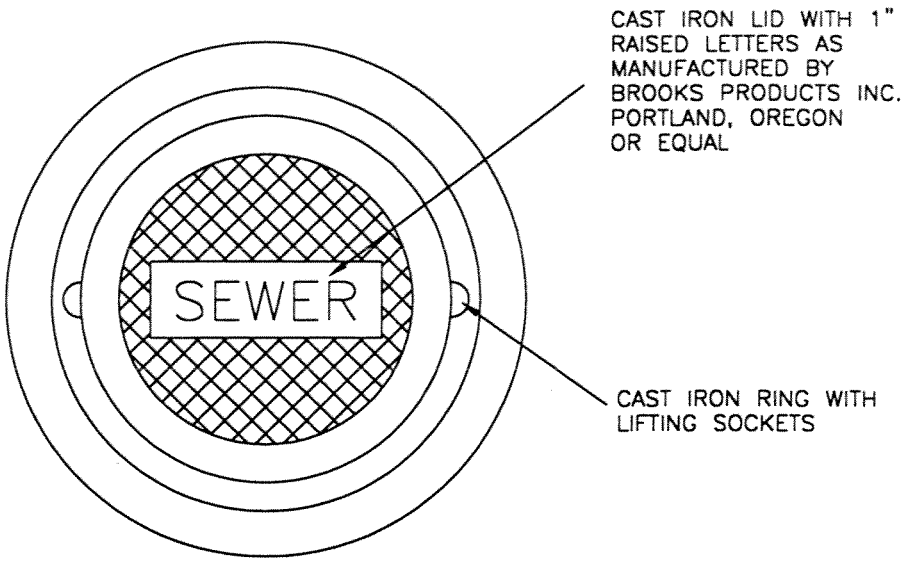

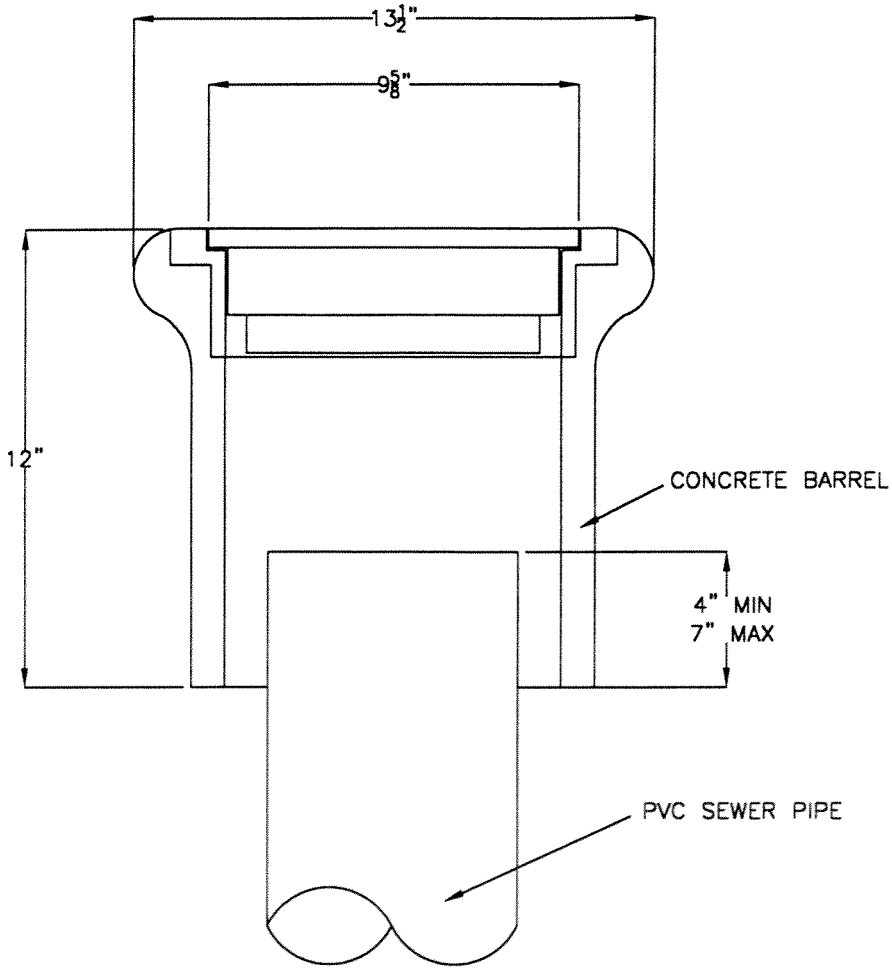

City of Newberg
414 E. FIRST STREET
NEWBERG, OREGON 97132

TRAFFIC BOX
PRIVATE AREAS ONLY

SCALE: N.T.S.	
DATE:	JUNE 2000
APP. BY:	L. ANDERSON
STANDARD DRAWING	211

EXHIBIT "C" TO
RESOLUTION NO. 2011-2936

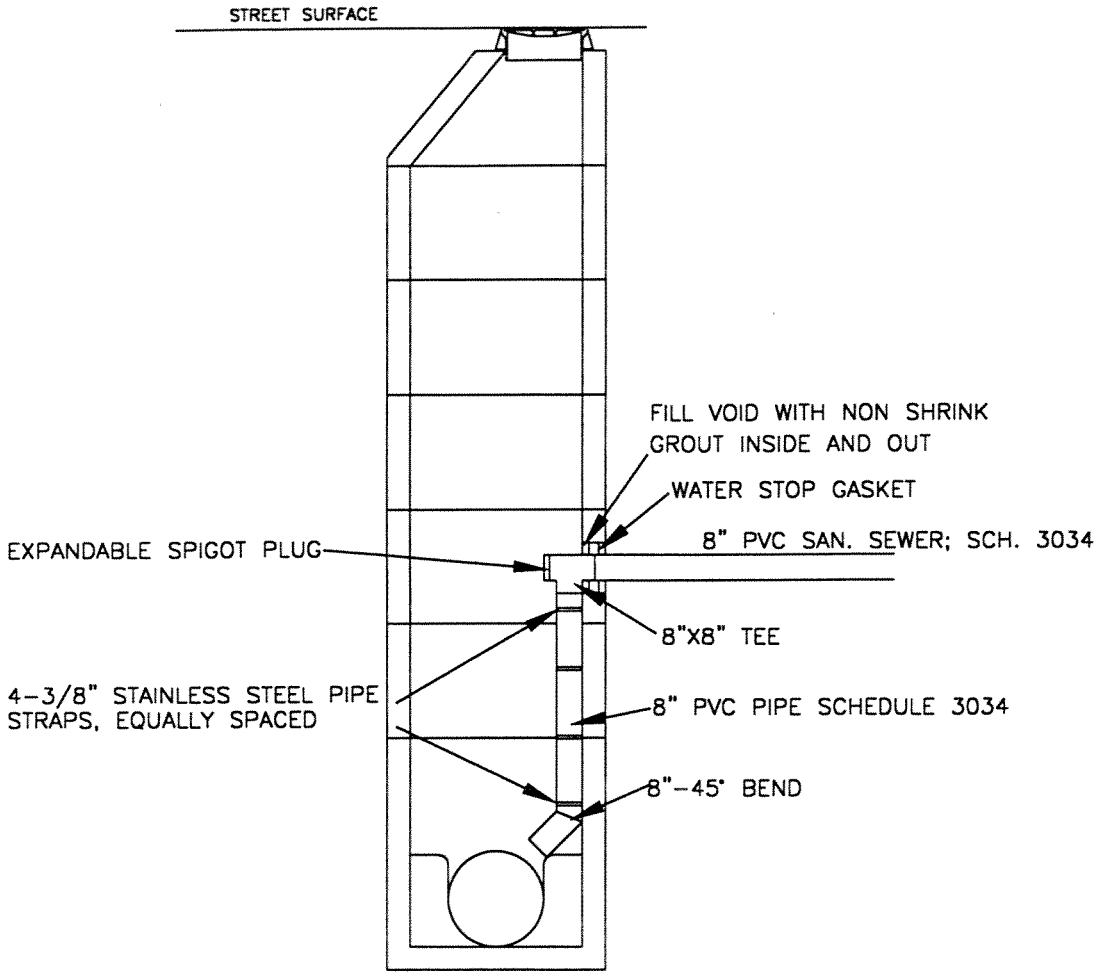

City of Newberg
414 E. FIRST STREET
NEWBERG, OREGON 97132

INSIDE DROP MANHOLE DETAIL

SCALE: N.T.S.	
DATE:	JUNE 2000
APP. BY:	L. ANDERSON
STANDARD DRAWING	212

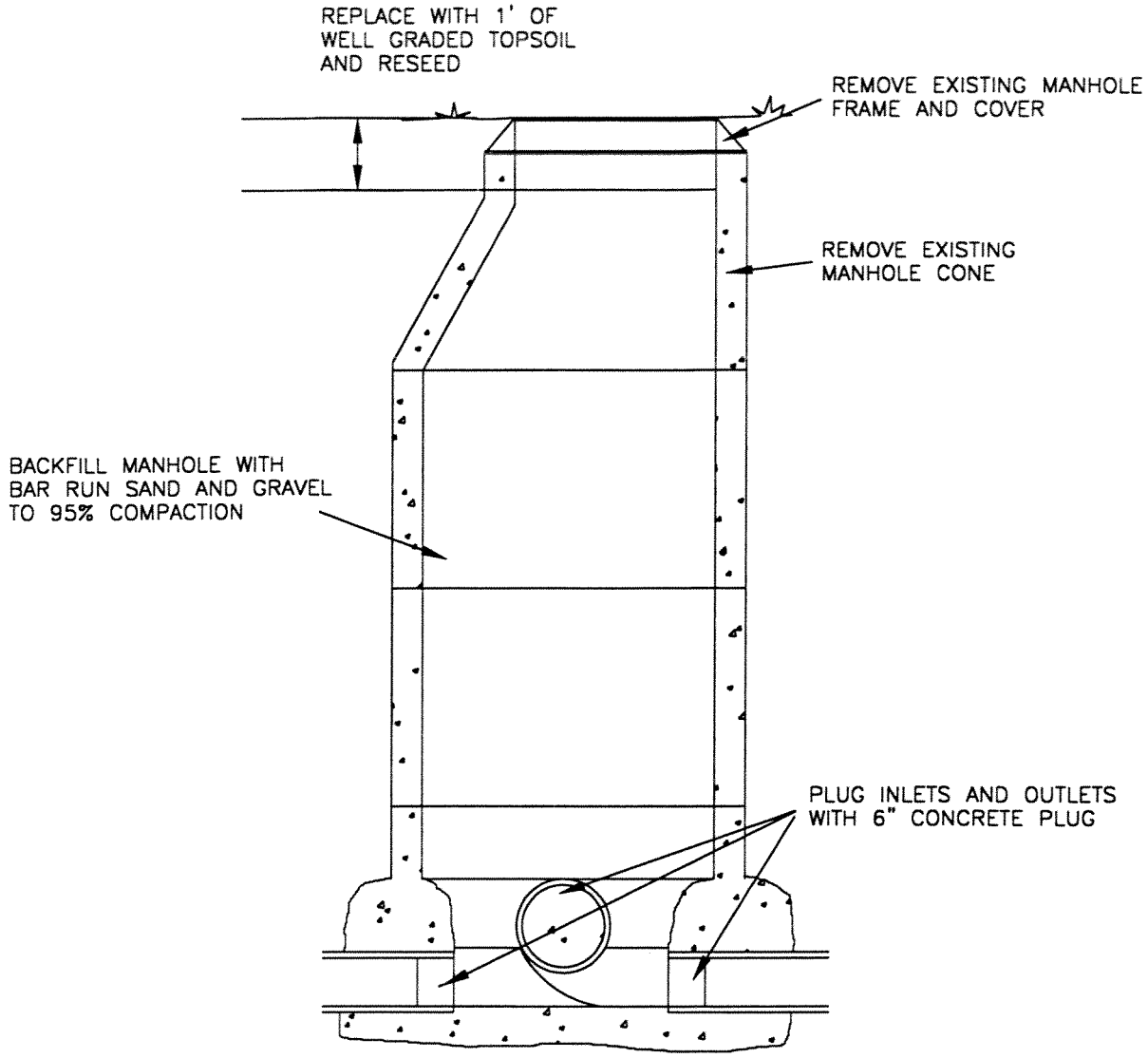

NOTES:
1. PRIOR TO ABANDONMENT OF MANHOLE VERIFY THAT ANY AND ALL SEWER SERVICES HAVE BEEN CONNECTED TO NEW SEWER MAIN.

City of Newberg 414 E. FIRST STREET NEWBERG, OREGON 97132	MANHOLE ABANDONMENT	SCALE: N.T.S. DATE: JUNE 2000 APP. BY: L. ANDERSON STANDARD DRAWING 213

EXHIBIT "C" TO
RESOLUTION NO. 2011-2936

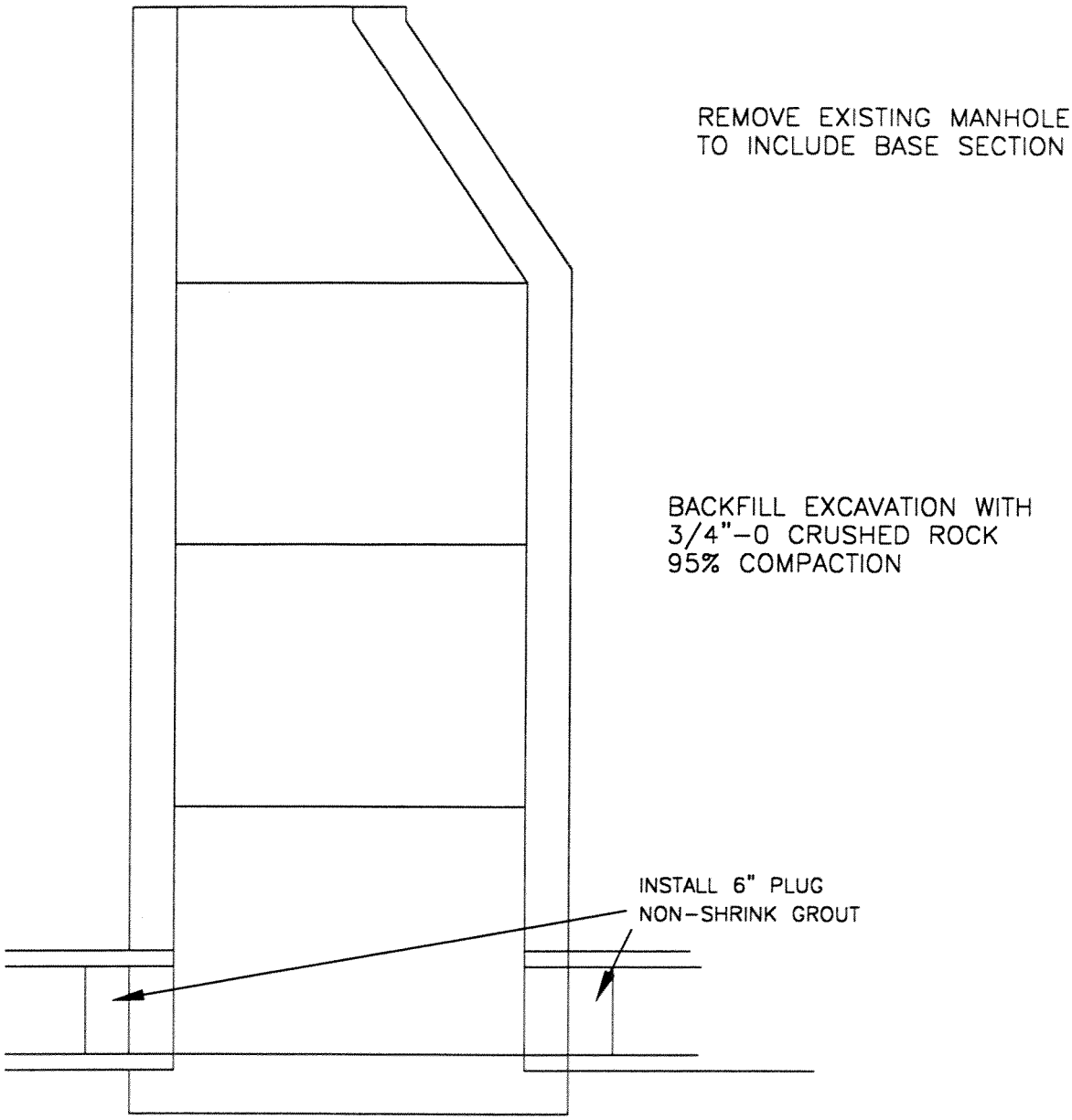

City of Newberg
414 E. FIRST STREET
NEWBERG, OREGON 97132

MANHOLE REMOVAL

SCALE: N.T.S.	
DATE:	JUNE 2000
APP. BY:	L. ANDERSON
STANDARD DRAWING	214

EXHIBIT "C" TO
RESOLUTION NO. 2011-2936

CLASS "D"

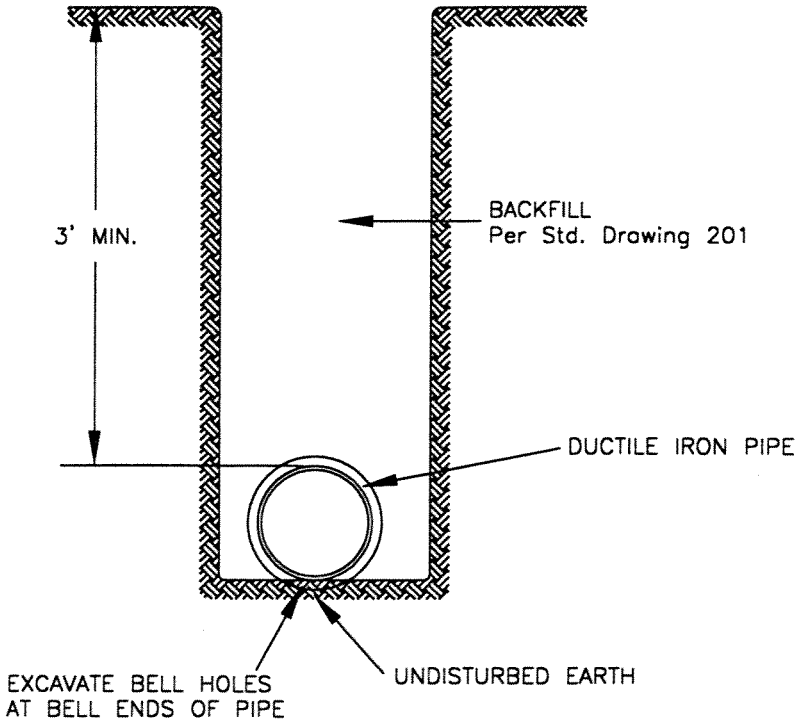

City of Newberg 414 E. FIRST STREET NEWBERG, OREGON 97132	WATER PIPE BEDDING	SCALE: N.T.S. DATE: JUNE 2000 APP. BY: L. ANDERSON STANDARD DRAWING 301

EXHIBIT "C" TO RESOLUTION NO. 2011-2936

FITTING SIZE (inches)	TEE, WYE & HYDRANTS ①	STRADDLE BLOCK ②	90° BEND ③ PLUGGED CROSS TEE PLUGGED – RUNS	45° BEND ④	22 1/2° BEND ④	11 1/4° BEND ④
2	*	*	*	*	*	*
4	1.3	1.6	1.9	1.3	*	*
6	2.8	3.7	4.0	2.1	1.3	*
8	5.1	6.5	7.1	3.9	2.0	1.3
10	7.9	10.2	11.2	6.1	3.2	1.6
12	11.3	14.7	16.0	8.8	4.5	2.3
14	15.3	20.0	21.7	11.9	6.1	3.1
16	20.0	26.1	28.4	15.5	8.0	4.0
18	25.3	33.0	36	19.5	10.1	5.1
LARGER	* *	* *	* *	* *	* *	* *
BEARING AREA OF THRUST BLOCKS (SQ. FT.)						

1. ALL VALUES ARE BASED ON THE FOLLOWING ASSUMPTIONS: AVERAGE TEST PRESSURE = 150 PSI; 1500 PSF SOIL BEARING CAPACITY; NORMAL DISTRIBUTION DESIGN VELOCITY NOT TO EXCEED 5 FEET PER SECOND.
2. ALL FITTINGS SHALL BE WRAPPED IN PLASTIC PRIOR TO PLACEMENT OF CONCRETE.
3. BEARING SURFACE OF THRUST BLOCKING SHALL BE AGAINST UNDISTURBED SOIL.
4. ALL CONCRETE SHALL HAVE A MIN. 28 DAY STRENGTH OF 3000 PSI.
5. ALL PIPE ZONES SHALL BE GRAVEL FILLED AND COMPACTED.
6. THRUST BLOCK FOR PLUGGED CROSS AND PLUGGED TEE SHALL HAVE #4 REBAR LIFTING LOOPS INSTALLED AS SHOWN ON PLANS.
7. VERTICAL THRUST DETAILS–SEE STD. DWG. 303
8. STRADDLE BLOCK DETAILS–SEE STD. DWG. 304
9. ABOVE BEARING AREAS ARE BASED ON A TEST PRESSURE OF 150 PSI AND AN ALLOWABLE SOIL BEARING STRESS OF 1500 LBS./SQ. FT.. TO COMPUTE BEARING AREAS OF DIFFERENT TEST PRESSURES AND SOIL BERAING STRESSES, USE THE FOLLOWING EQUATION:

$$\text{BEARING AREA} = \text{TABLE VALUE} \times \frac{\text{TEST PRESSURE}}{150} \times \frac{2000}{\text{SOIL BEARING STRESS}}$$

* BLOCK TO UNDISTURBED TRENCH WALLS

* * THRUST BLOCKS FOR PIPES LARGER THAN 18" WILL BE INDIVIDUALLY DESIGNED BY THE ENGINEER

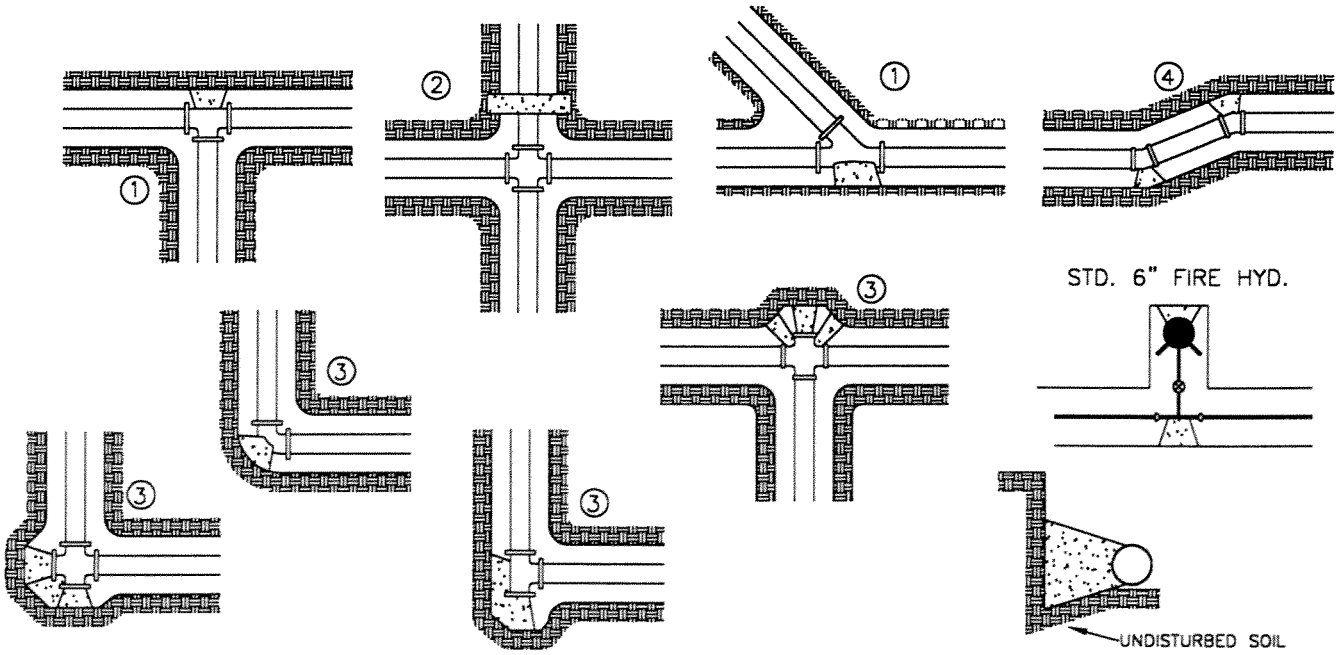

City of Newberg
414 E. FIRST STREET
NEWBERG, OREGON 97132

THRUST BLOCKING

SCALE: N.T.S.
DATE: JUNE 2000
APP. BY: L. ANDERSON
STANDARD DRAWING 302

EXHIBIT "C" TO RESOLUTION NO. 2011-2936

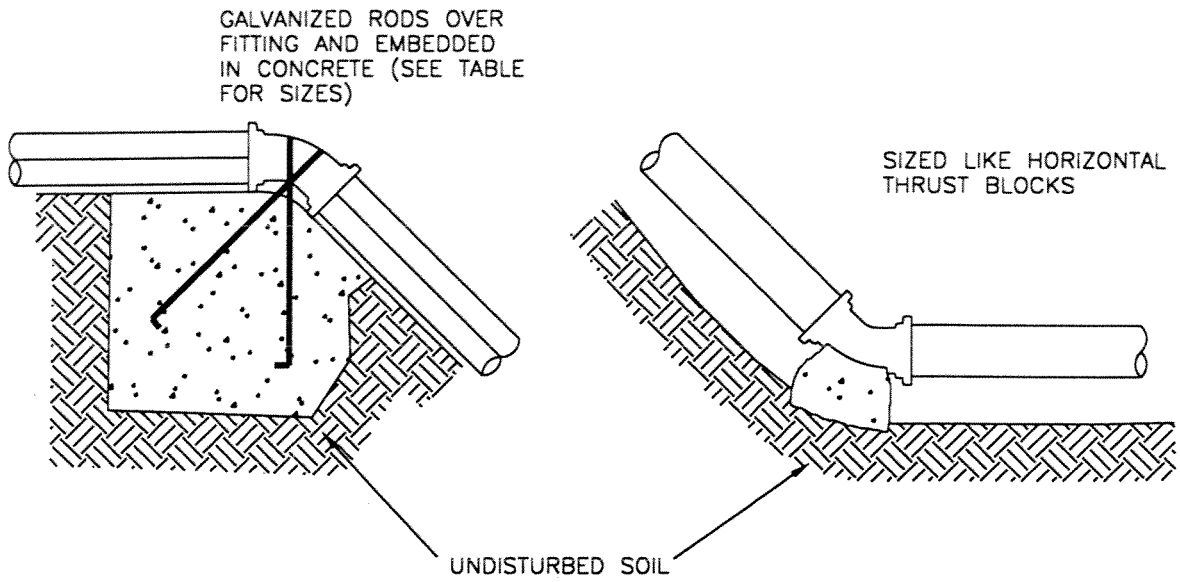

GRAVITY VERTICAL THRUST BLOCK

NORMAL VERTICAL THRUST BLOCK

VOLUME OF THRUST BLOCK IN CUBIC YARDS (VERTICAL BENDS)			
FITTING SIZE	BEND ANGLE		
	45°	22 1/2°	11 1/4°
4"	1.1	0.4	0.2
6"	2.7	1.0	0.4
8"	4.0	1.5	0.6
10"	6.0	2.3	0.9
12"	8.5	3.2	1.3
14"	11.5	4.3	1.8
16"	14.8	5.6	2.3

FITTING SIZE	ROD SIZE	EMBED-MENT
12" AND LESS	#6	30"
14" – 16"	#8	36"

NOTES

1. GRAVITY VERTICAL THRUST BLOCKS SHALL BE DESIGNED BY THE ENGINEER.
2. KEEP CONCRETE CLEAR OF JOINTS AND JOINT ACCESSORIES. FITTINGS SHALL BE WRAPPED IN PLASTIC PRIOR TO PLACEMENT OF CONCRETE.
3. CONCRETE THRUST BLOCKS SHALL BE POURED AGAINST UNDISTURBED EARTH.
4. CONCRETE SHALL HAVE A MINIMUM 28 DAY STRENGTH OF 3000 PSI.
5. THRUST BLOCK VOLUMES FOR VERTICAL BENDS HAVING UPWARD RESULTANT THRUSTS ARE BASED ON TEST PRESSURE OF 150 PSIG AND THE WEIGHT OF CONCRETE OF 4050 LBS./C.Y..
6. VERTICAL BENDS THAT REQUIRE A THRUST BLOCK VOLUME EXCEEDING 5 CUBIC YARDS REQUIRE SPECIAL BLOCKING DETAILS. SEE PLANS FOR VOLUMES SHOWN INSIDE HEAVY LINE IN TABLE.
7. PAYMENT SHALL BE THE SAME AS FOR HORIZONTAL THRUST BLOCKS.
8. ALL REBAR SHALL BE GALVANIZED IN ACCORDANCE WITH ASTM–123 (MIN. 3.4 MIL). REBAR SHALL BE BENT BEFORE GALVANIZATION, AND LAST 4" OF BAR SHALL BE BENT 90° WITH A 1/2" RADIUS BEND. REBAR SHALL BE TIGHTLY FIT TO RESTRAINED FITTING.
9. FOR HORIZIONTAL THRUST BLOCK DETAILS SEE STANDARD DRAWING NO. 302.

City of Newberg
414 E. FIRST STREET
NEWBERG, OREGON 97132

VERTICAL THRUST BLOCKING

SCALE: N.T.S.
DATE: JUNE 2000
APP. BY: L. ANDERSON
STANDARD DRAWING 303

EXHIBIT "C" TO
RESOLUTION NO. 2011-2936

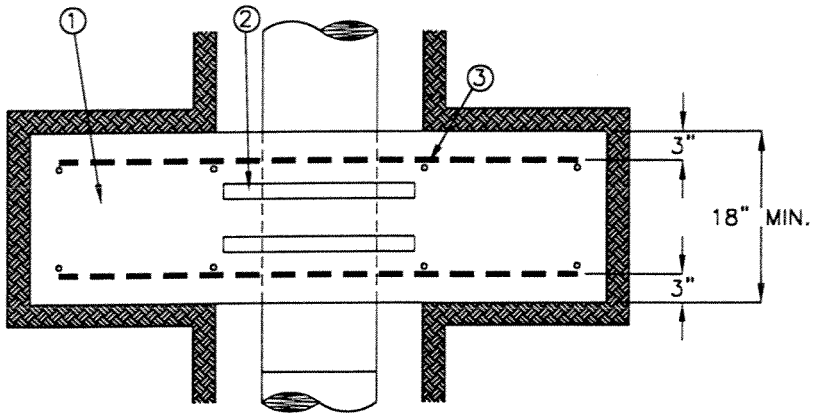

TOP VIEW

MATERIALS

1. CONCRETE STRADDLE BLOCK
2. MECHANICAL JOINT RETAINER GLAND
3. RE-BAR VERTICAL AND HORIZIONTAL

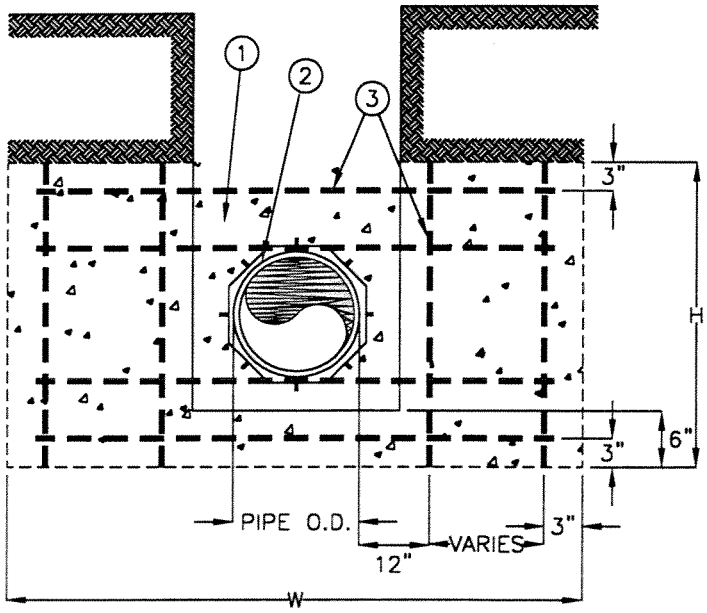

FRONT VIEW

NOTES

1. STRADDLE BLOCKS SHALL BE DESIGNED BY THE ENGINEER AND BASED ON THE FOLLOWING:
   a.) 150 PSI WATER PRESSURE
   b.) SOIL BEARING CAPACITY, STEEL SIZE AND SPACING BY THE ENGINEER
2. BEARING AREA OF BLOCK SHALL BE AGAINST UNDISTURBED SOIL
3. STRADDLE BLOCK SHALL HAVE A MINIMUM COVER OF 18"
4. CONCRETE SHALL HAVE A MINIMUM 28 DAY STRENGTH OF 3000 PSI
5. ALL FITTINGS WITHIN THE CONCRETE SHALL BE WRAPPED IN PLASTIC
6. STRADDLE BLOCK HEIGHT (H) AND WIDTH (W) SHALL BE DETERMINED BY THE ENGINEER

City of Newberg
414 E. FIRST STREET
NEWBERG, OREGON 97132

STRADDLE BLOCK

SCALE: N.T.S.	
DATE:	JUNE 2000
APP. BY:	L. ANDERSON
STANDARD DRAWING	304

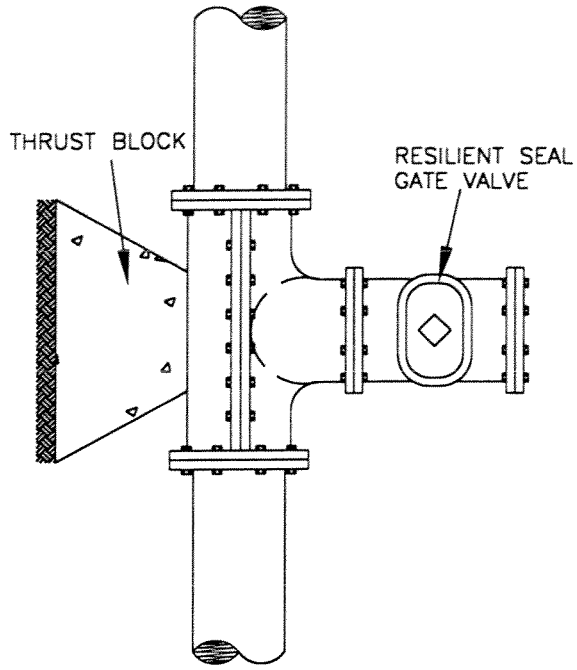

MUELLER / CLOW OR APPROVED EQUAL
FULL MJ TAPPING SLEEVE

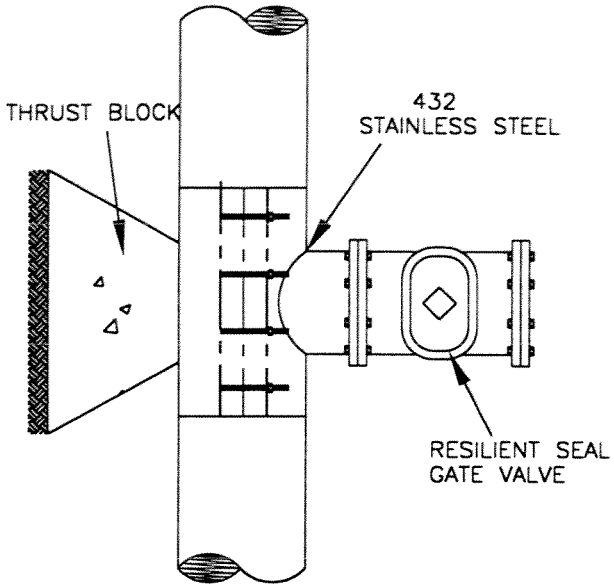

STAINLESS STEEL TAPPING SLEEVE

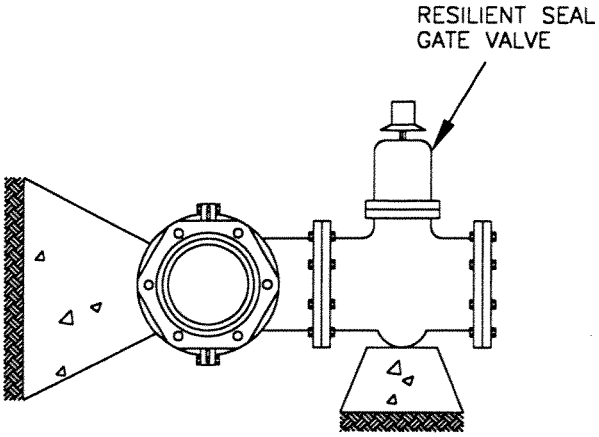

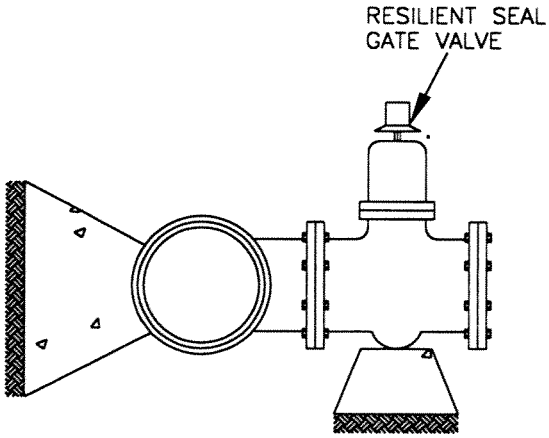

NOTES
1. WATER MAIN SHALL BE CLEANED BEFORE ATTACHING SLEEVE.
2. SLEEVE AND VALVE SHALL BE PRESSURE TESTED BEFORE MAKING TAP
3. PRESSURE TEST AND TAP SHALL BE MADE IN THE PRESENCE OF AN AUTHORIZED CITY REPRESENTATIVE BY A CONTRACTOR APPROVED BY THE ENGINEER.
4. 3/4"-0" CRUSHED ROCK SHALL BE PLACED AND COMPACTED TO 95% OF MAXIMUM DENSITY AS DETERMINED BY AASHTO T-180.
5. THRUST BLOCKING REQUIREMENTS SHALL BE DETERMINED BY THE ENGINEER AS PER STANDARD DRAWING NO. 302.
6. TAP SHALL BE MADE NO CLOSER THAN 18" FROM THE NEAREST JOINT.
7. SLEEVE AND VALVE SHALL BE WRAPPED AND SEALED WITH 8 MIL PLASTIC.
8. FLUSH ALL METAL SHAVINGS FROM THE TAPPING PROCESS.
9. STAINLESS STEEL TAPPING SLEEVE ON DUCTILE IRON PIPE
DUCTILE IRON, FULL MECHANICAL JOINT TAPPING SLEEVE ON CAST IRON PIPE.

City of Newberg
414 E. FIRST STREET
NEWBERG, OREGON 97132

WATER TAPPING SLEEVES

SCALE: N.T.S.	
DATE:	JUNE 2000
APP. BY:	L. ANDERSON
STANDARD DRAWING	305

EXHIBIT "C" TO
RESOLUTION NO. 2011-2936

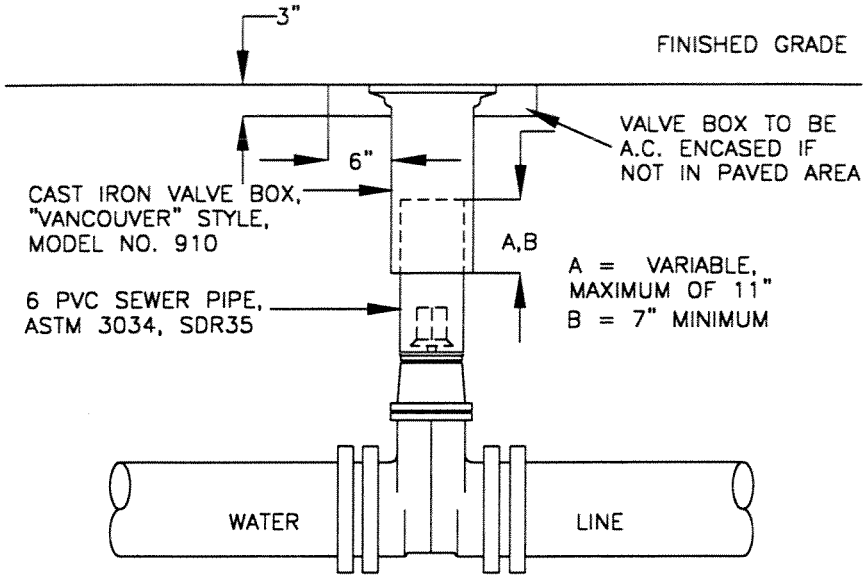

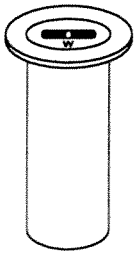

"VANCOUVER"
18" TALL VALVE BOX

NOTES:

1. VALVE BOXES SHALL BE CENTERED DIRECTLY OVER THE NUT IN A VERTICAL POSITION.
2. VALVE BOX SHALL BE ADJUSTED TO MEET FINISHED GRADE.
3. PVC SHALL BE ONE CONTINUOUS PIECE – NO BELLS OR COUPLERS.
4. SEE STANDARD DRAWING NO. 307 VALVE BOX AND COVER.

City of Newberg 414 E. FIRST STREET NEWBERG, OREGON 97132	VALVE BOX ASSEMBLY	SCALE: N.T.S. DATE: JUNE 2000 APP. BY: L. ANDERSON STANDARD DRAWING 306

EXHIBIT "C" TO
RESOLUTION NO. 2011-2936

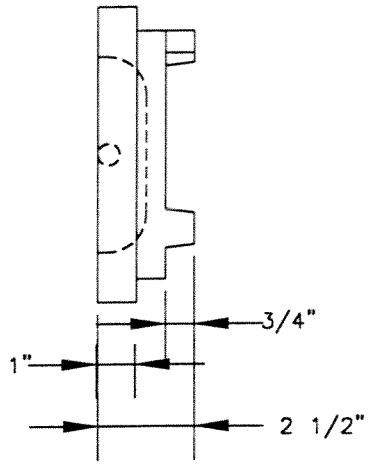

TOP VIEW

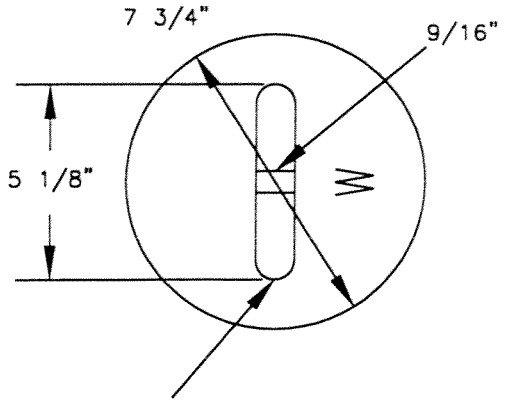

LIFT POCKET 1" WIDE X 1.25" DEEP

BOTTOM VIEW

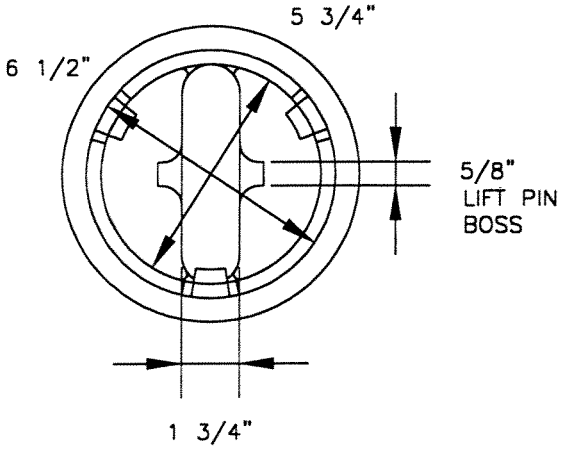

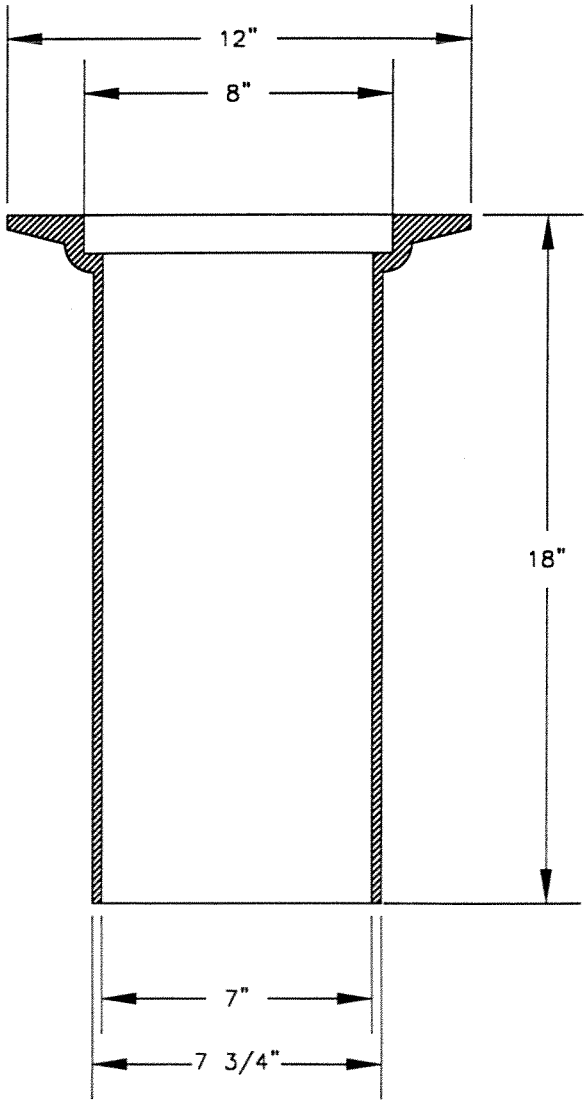

MATERIALS:
CAST IRON PER ASTM A48 CL30

City of Newberg 414 E. FIRST STREET NEWBERG, OREGON 97132	VALVE BOX AND COVER	SCALE: N.T.S. DATE: JUNE 2000 APP. BY: L. ANDERSON STANDARD DRAWING 307

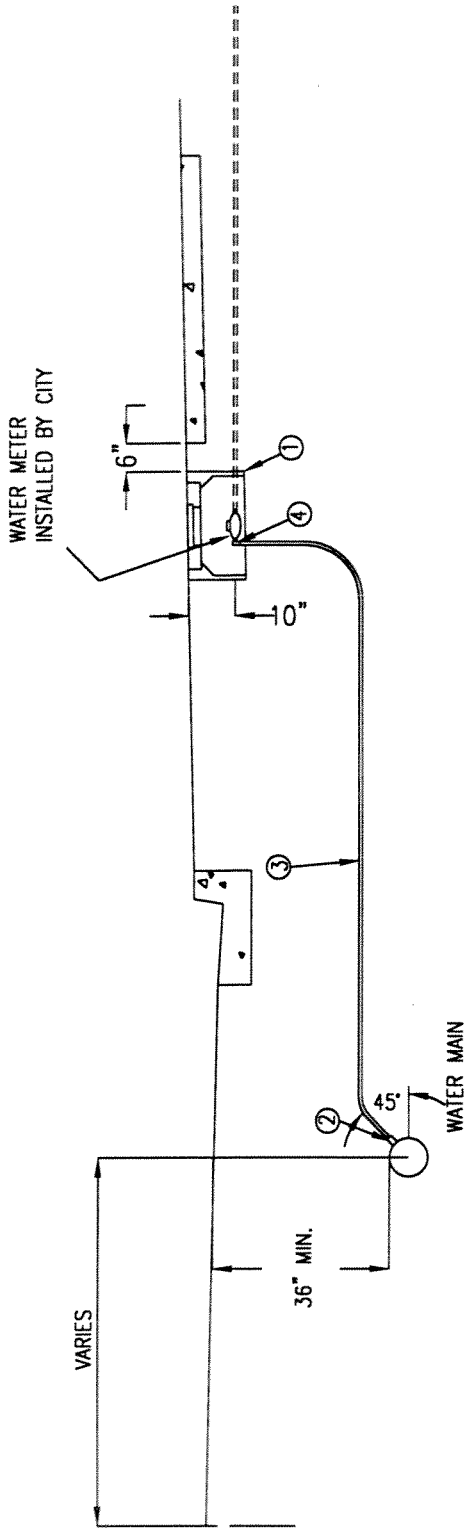

MATERIALS

1. BROOKS METER BOX, BODY NO. 37 SERIES (1"), WITH "S" COVER AND TOUCH READ LID
2. McDONALD, FORD OR MUELLER CORPORATION STOP
3. 3/4" AND 1" SOFT TEMPER, TYPE "K" COPPER TUBING COMPLYING WITH ASTM B-88
4. McDONALD, FORD OR MUELLER METER STOP
5. ALL FITTINGS ARE COMPRESSION TYPE

NOTES

1. SUBSTITUTES FOR ANY MATERIALS SHOWN SHALL BE APPROVED BY THE CITY ENGINEER
2. ALL PIPE AND STRUCTURE ZONES SHALL BE BACKFILLED USING 3/4" MINUS CRUSHED ROCK AND COMPACTED TO 95% MAXIMUM DENSITY AS DETERMINED BY AASHTO T-180
3. WHEN AN ACTIVE CATHODIC PROTECTED SYSTEM IS ENCOUNTERED, SCHEDULE 40 PVC SHALL BE INSTALLED ACCORDING TO STANDARD DRAWING NO. 318
4. METER BOX SHALL BE CENTERED OVER THE COMPLETED METER ASSEMBLY
5. FOR LOCATION OF WATER MAIN, SEE STANDARD DRAWING NO. 105

City of Newberg, OR
414 E. FIRST STREET
NEWBERG, OREGON 97132

STANDARD 3/4" AND 1" WATER SERVICE

SCALE: N.T.S.	
DATE:	JUNE 2000
APP. BY:	L. ANDERSON
STANDARD DRAWING	308

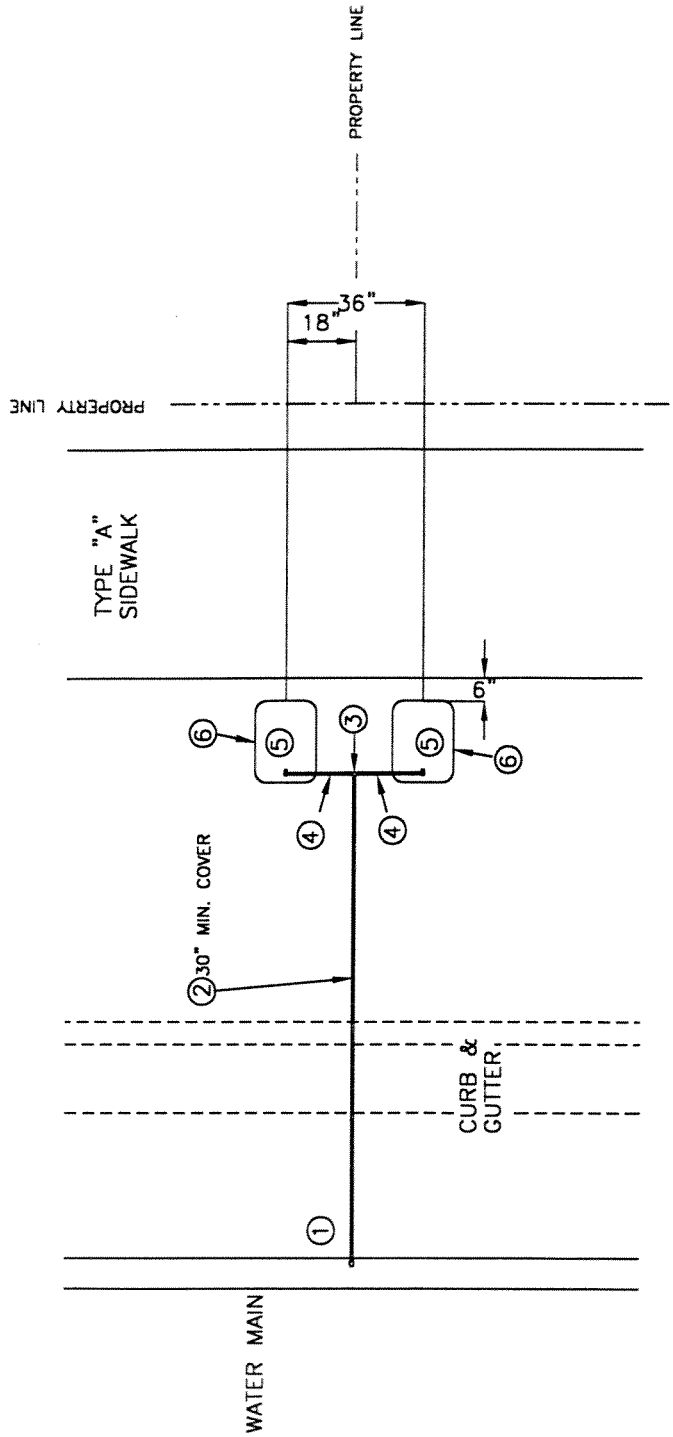

MATERIALS

1. FORD OR MUELLER CORPORATION STOP SET AT 45° ANGLE.
2. 1" SOFT TEMPER TYPE "K" COPPER TUBING COMPLYING WITH ASTM B-88.
3. McDONALD "T" COMPRESSION NUT, FORD OR MUELLER 3/4" X 3/4" X 1" 'BULLHEAD' TEE.
4. 3/4" SOFT TEMPER TYPE "K" COPPER TUBING COMPLYING WITH ASTM B-88.
5. McDONALD, FORD OR MUELLER METER STOP.
6. BROOKS METER BOX, BODY NO. 37 (1"), WITH S-COVER AND TOUCH READ LID.
7. ALL FITTINGS ARE COMPRESSION TYPE.

NOTES

1. SUBSTITUTES FOR ANY MATERIALS SHALL BE APPROVED BY THE CITY ENGINEER.
2. ALL PIPE AND STRUCTURE ZONES SHALL BE BACKFILLED USING 3/4" MINUS CRUSHED ROCK AND COMPACTED TO 95% MAXIMUM DENSITY AS DETERMINED BY AASHTO T-180.
3. METER BOX SHALL BE CENTERED OVER THE COMPLETED METER ASSEMBLY.
4. SEE STANDARD DRAWING 308 FOR ADDITIONAL DETAILS.

City of Newberg
414 E. FIRST STREET
NEWBERG, OREGON 97132

DOUBLE WATER SERVICE

SCALE: N.T.S.	
DATE:	JUNE 2000
APP. BY:	L. ANDERSON
STANDARD DRAWING	309

EXHIBIT "C" TO
RESOLUTION NO. 2011-2936

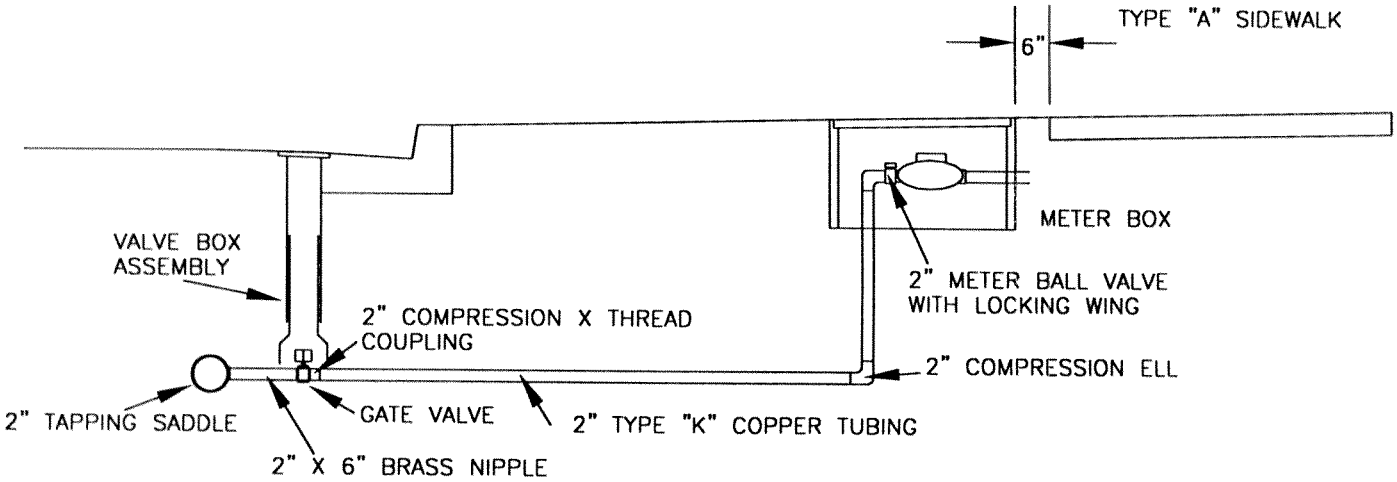

MATERIALS

1. BROOKS METER BOX, BODY NO. 65 (2"), WITH S-COVER AND TOUCH READ LID.
2. 2" CAST IRON BODY GATE VALVE WITH STANDARD 2" SQUARE OPERATING NUT.
3. SOFT TEMPER, TYPE "K" COPPER TUBING COMPLYING WITH ASTM B-88.
4. McDONALD "T" COMPRESSION NUT, FORD OR MUELLER METER STOP.
5. ALL FITTINGS ARE COMPRESSION TYPE.

NOTES

1. SUBSTITUTES FOR ANY MATERIALS SHOWN SHALL BE APPROVED BY THE CITY ENGINEER.
2. ALL PIPE AND STRUCTURE ZONES SHALL BE BACKFILLED USING 3/4"-0 CRUSHED AGGREGATE AND COMPACTED TO 95% MAXIMUM DENSITY AS DETERMINED BY AASHTO T-180.
3. METER BOX SHALL BE CENTERED OVER THE COMPLETED METER ASSEMBLY.

City of Newberg
414 E. FIRST STREET
NEWBERG, OREGON 97132

STANDARD 1 1/2" & 2" WATER SERVICE

SCALE: N.T.S.
DATE: JUNE 2000
APP. BY: L. ANDERSON
STANDARD DRAWING 310

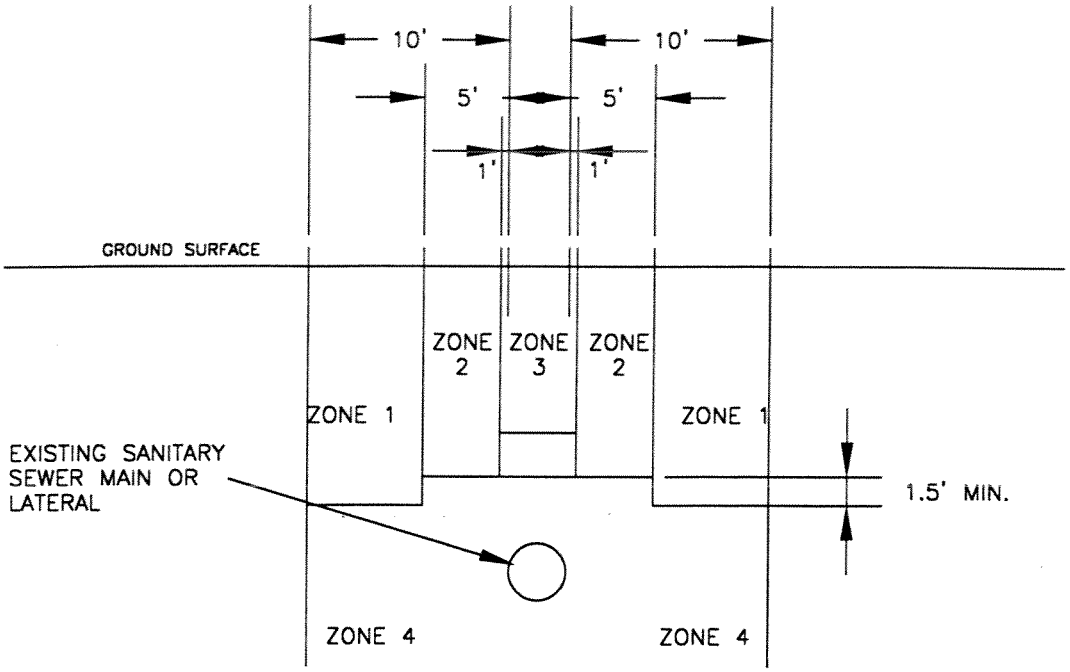

ZONE 1: ONLY CROSSING RESTRICTIONS APPLY
ZONE 2: CASE BY CASE DETERMINATION
ZONE 3: PARALLEL WATERLINE PROHIBITED
ZONE 4: PARALLEL WATERLINE PROHIBITED

NOTES:

1. WHERE THE PROPOSED WATERLINE WILL BE INSTALLED PARALLEL TO AN EXISTING GRAVITY SEWER MAIN OR LATERAL LINE, THE SEPARATION BETWEEN THE TWO SHALL BE AS INDICATED ABOVE.
2. CROSSINGS
   a. WHEREVER POSSIBLE, THE BOTTOM OF THE WATERLINE SHALL BE 1.5 FEET ABOVE THE TOP OF THE SEWER LINE, AND ONE FULL LENGTH OF WATERLINE SHALL BE CENTERED AT THE CROSSING.
   b. WHERE IT IS NOT POSSIBLE FOR THE WATERLINE TO BE 1.5 FEET ABOVE THE SEWER LINE, OR THE WATERLINE PASSES UNDER THE SEWER LINE, THE EXISTING SEWER LINE SHALL BE EXPOSED FOR A DISTANCE OF 10 FEET ON EACH SIDE OF THE CROSSING, AND SHALL BE REPLACED WITH C-900 PVC, DR-18, DR-25 OR CLASS 50 DUCTILE IRON PIPE AS APPROVED BY THE ENGINEER, AND THE FULL LENGTH OF WATER PIPE SHALL BE CENTERED AT THE CROSSING OR AS APPROVED BY THE ENGINEER.

City of Newberg
414 E. FIRST STREET
NEWBERG, OREGON 97132

WATER LINE CROSSINGS

SCALE: N.T.S.	
DATE:	JUNE 2000
APP. BY:	L. ANDERSON
STANDARD DRAWING	311

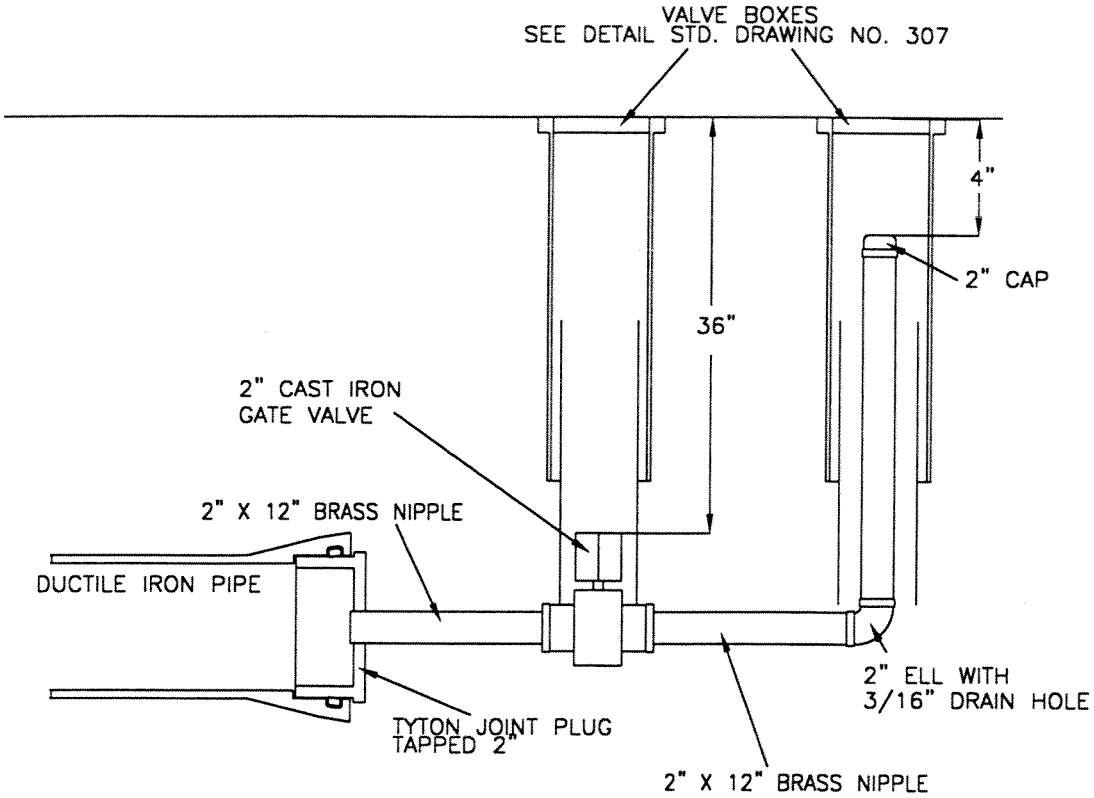

NOTES

1. COAT ALL GALVANIZED PIPE OR EXPOSED STEEL WITH PROTECTIVE COATING CONFORMING TO AWWA C 203
2. RESTRAIN TYTON JOINT PLUG TO PIPE
3. THIS STANDARD APPLICABLE FOR PIPE SIZES THROUGH 8"

City of Newberg
414 E. FIRST STREET
NEWBERG, OREGON 97132

BLOW-OFF ASSEMBLY

SCALE: N.T.S.	
DATE:	JUNE 2000
APP. BY:	L. ANDERSON
STANDARD DRAWING	312

EXHIBIT "C" TO
RESOLUTION NO. 2011-2936

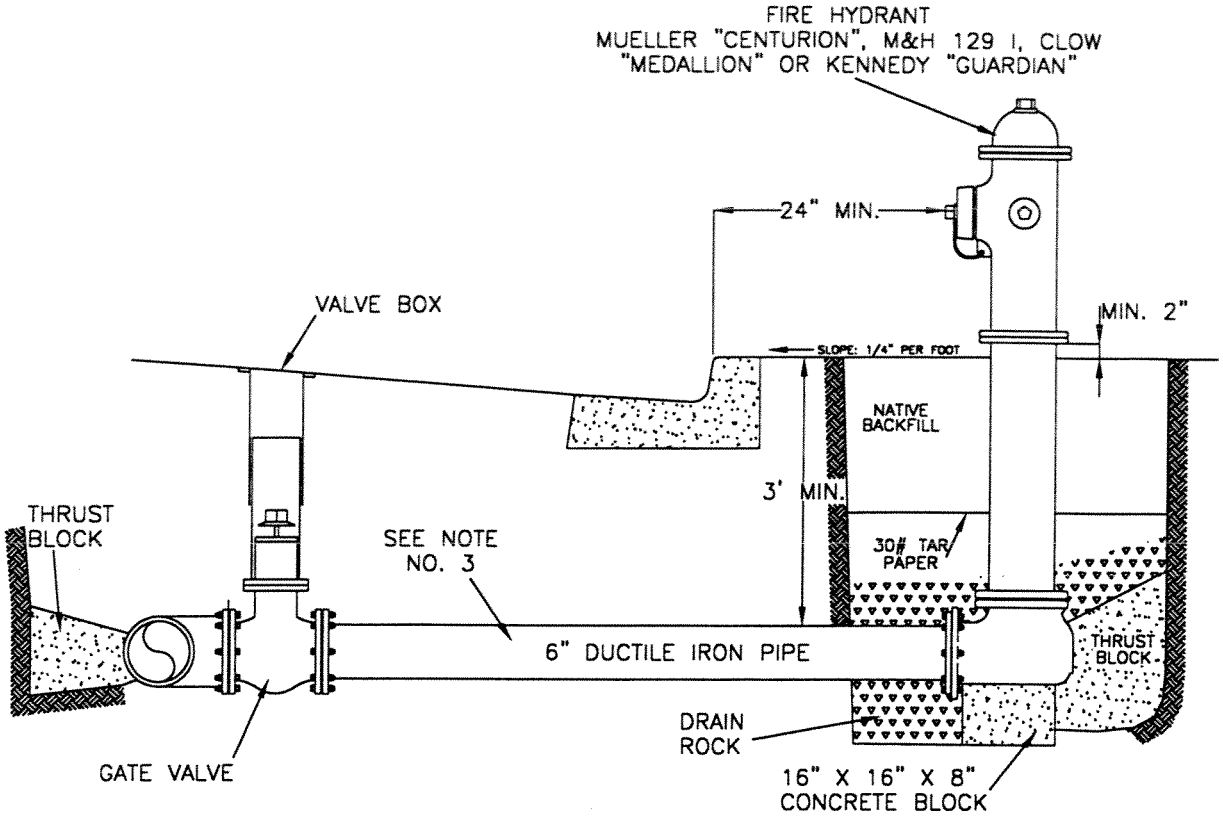

1. HYDRANT TO HAVE 2-2 1"/2 AND 1-4 1"/2 OPENINGS (ANSI STD.).
2. 6" MINIMUM PIPE SIZE SUPPLYING HYDRANT.
3. 6" M.J. HOLDING SPOOL AS PER STANDARD DRAWING NO. 320, FLANGED FITTINGS OR MEGA LUG RESTRAINERS.
4. ADJUSTING SPOOL NOT TO BE USED ON NEW CONSTRUCTION.
5. HYDRANTS SHALL BE INSTALLED UPON A PRE-FORMED CONCRETE BLOCK WITH CLEAN 1 1/2" DRAIN ROCK PLACED A MINIMUM OF 6" ABOVE DRAIN HOLES.
6. 30# TAR PAPER SHALL BE PLACED ON TOP OF THE DRAIN ROCK TO SEPARATE ROCK FROM NATIVE MATERIAL.
7. THRUST BLOCK REQUIREMENTS AS PER STANDARD DRAWING NO. 302.

City of Newberg 414 E. FIRST STREET NEWBERG, OREGON 97132	FIRE HYDRANT ASSEMBLY	SCALE: N.T.S. DATE: JUNE 2000 APP. BY: L. ANDERSON STANDARD DRAWING 313

EXHIBIT "C" TO
RESOLUTION NO. 2011-2936

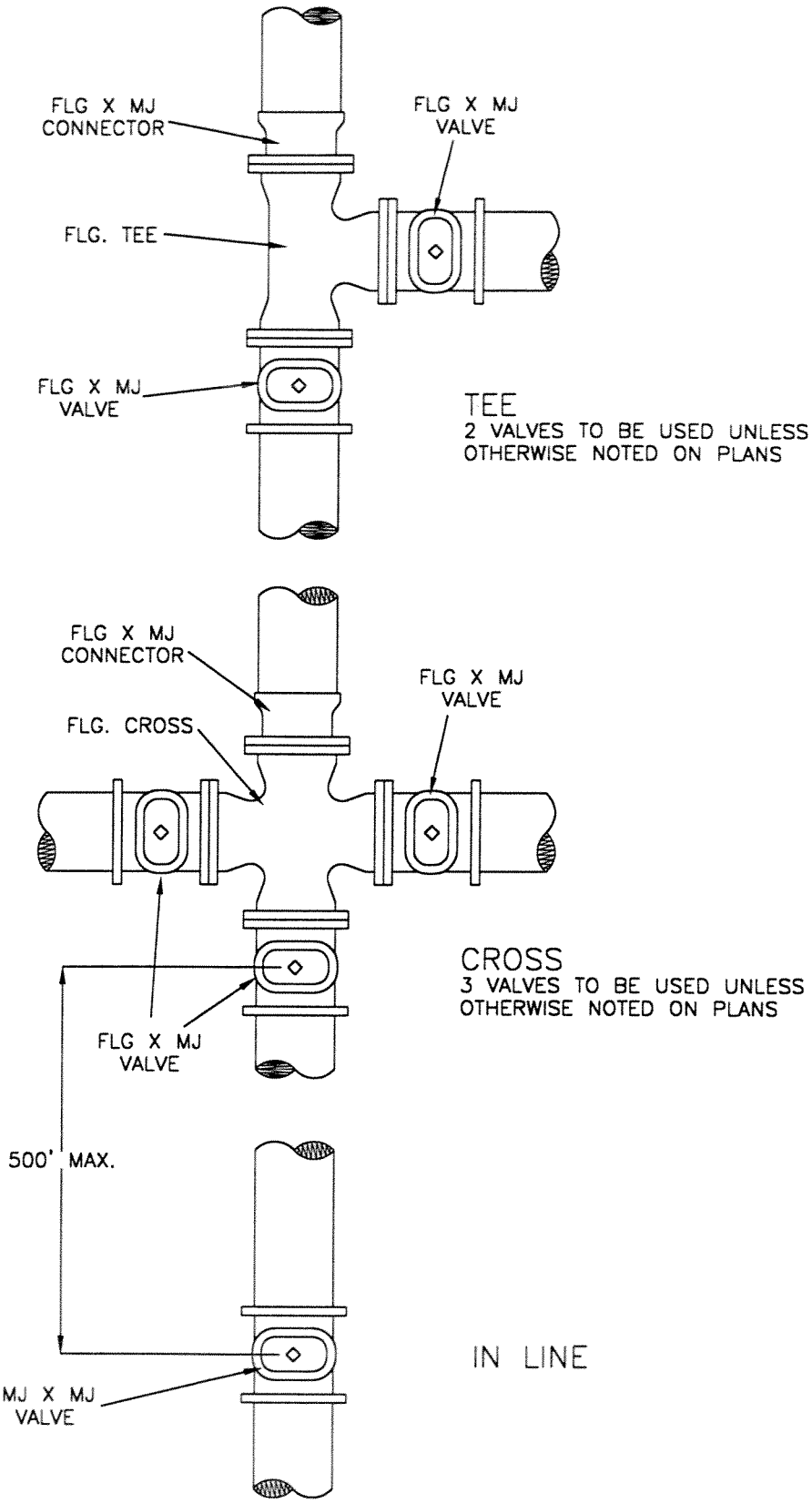

City of Newberg
414 E. FIRST STREET
NEWBERG, OREGON 97132

VALVE LOCATIONS AND SPACING

SCALE: N.T.S.	
DATE:	JUNE 2000
APP. BY:	L. ANDERSON
STANDARD DRAWING	314

EXHIBIT "C" TO
RESOLUTION NO. 2011-2936

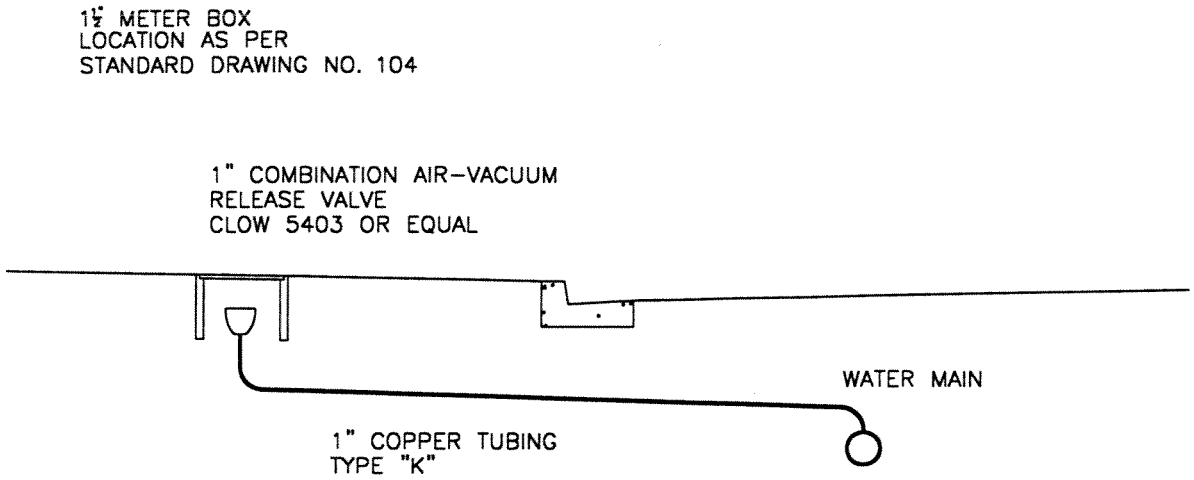

City of Newberg
414 E. FIRST STREET
NEWBERG, OREGON 97132

COMBINATION AIR - VACUUM RELEASE ASSEMBLY

SCALE: N.T.S.	
DATE:	JUNE 2000
APP. BY:	L. ANDERSON
STANDARD DRAWING	315

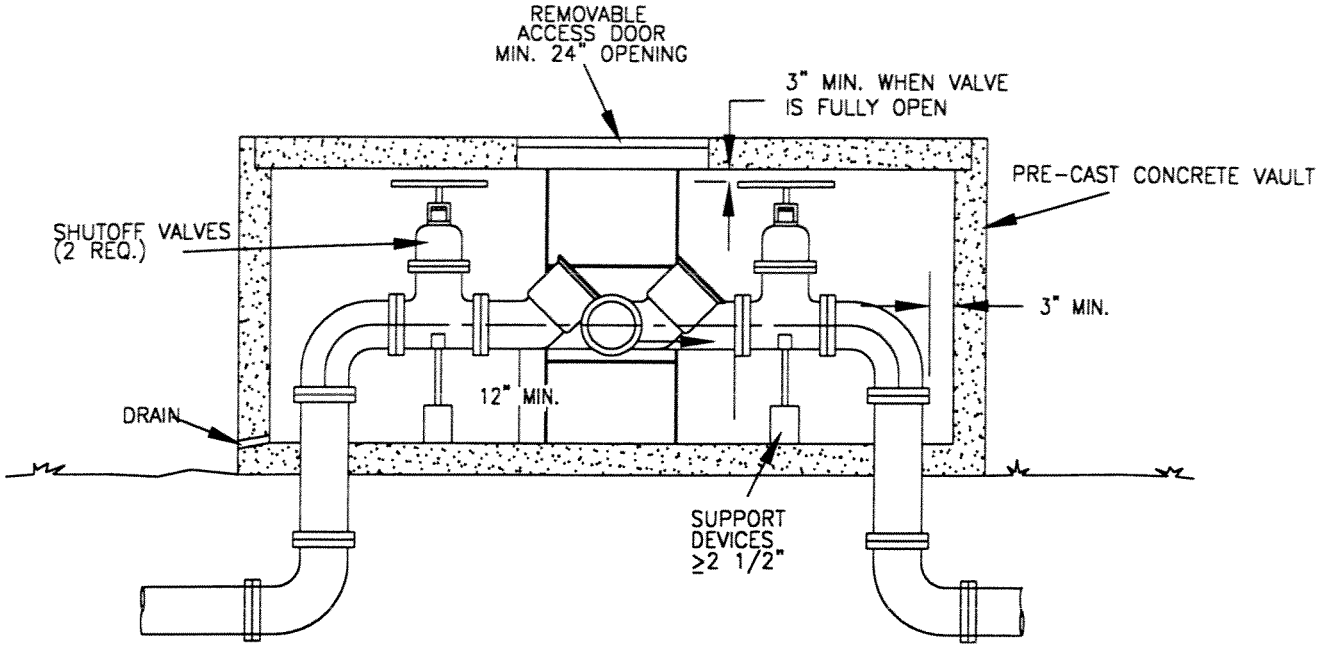

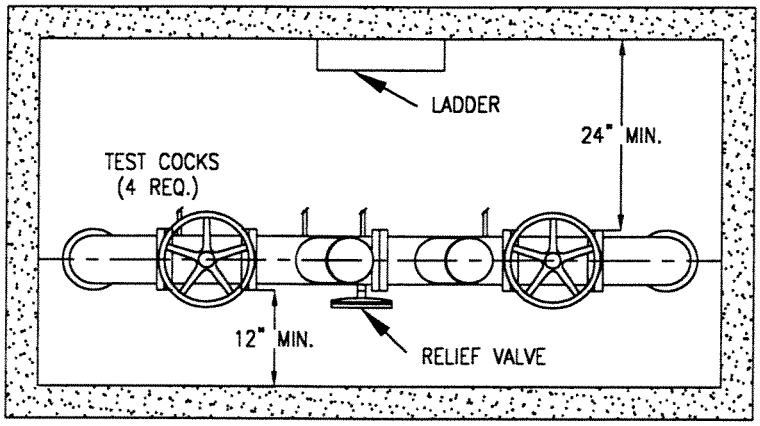

City of Newberg
414 E. FIRST STREET
NEWBERG, OREGON 97132

REDUCED PRESSURE BACKFLOW DEVICE
OR
DOUBLE CHECK VALVE ASSEMBLY
(ABOVE GROUND)

SCALE: N.T.S.	
DATE:	JUNE 2000
APP. BY:	L. ANDERSON
STANDARD DRAWING	316

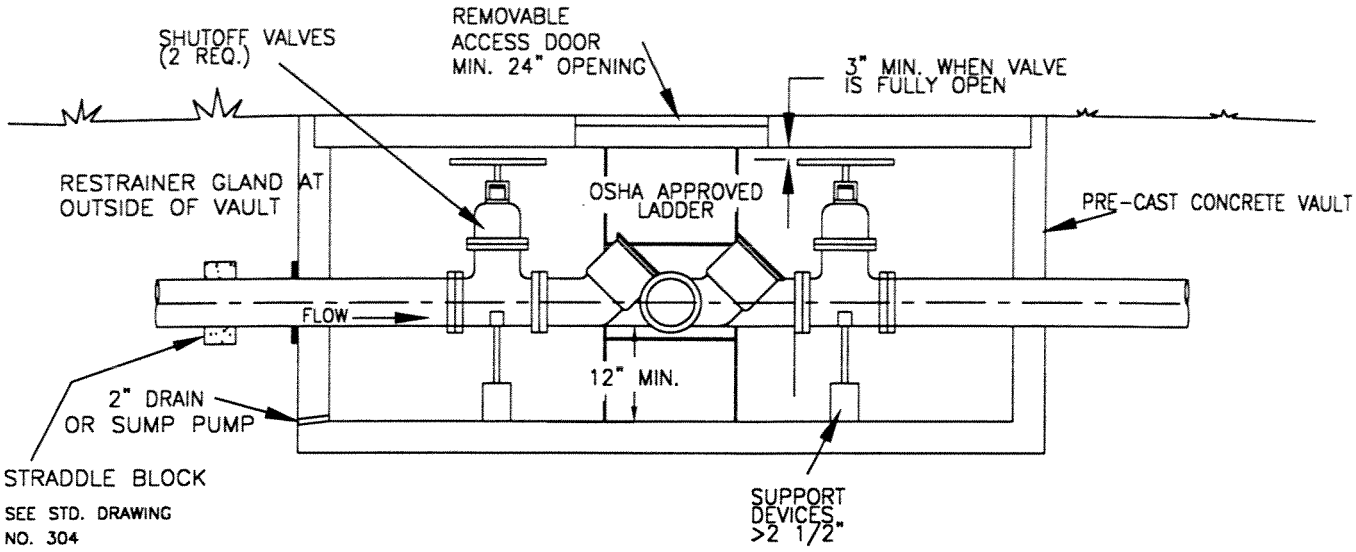

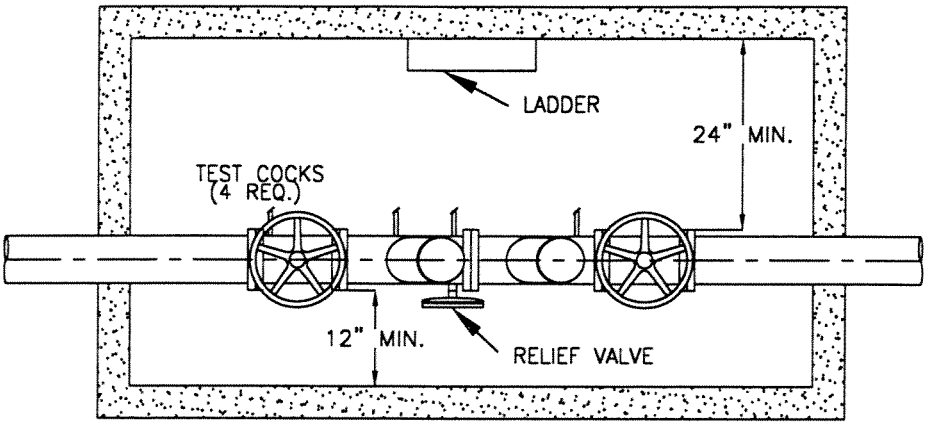

City of Newberg
414 E. FIRST STREET
NEWBERG, OREGON 97132

REDUCED PRESSURE BACKFLOW DEVICE
OR
DOUBLE CHECK VALVE ASSEMBLY
(BELOW GROUND)

SCALE: N.T.S.	
DATE:	JUNE 2000
APP. BY:	L. ANDERSON
STANDARD DRAWING	317

EXHIBIT "C" TO
RESOLUTION NO. 2011-2936

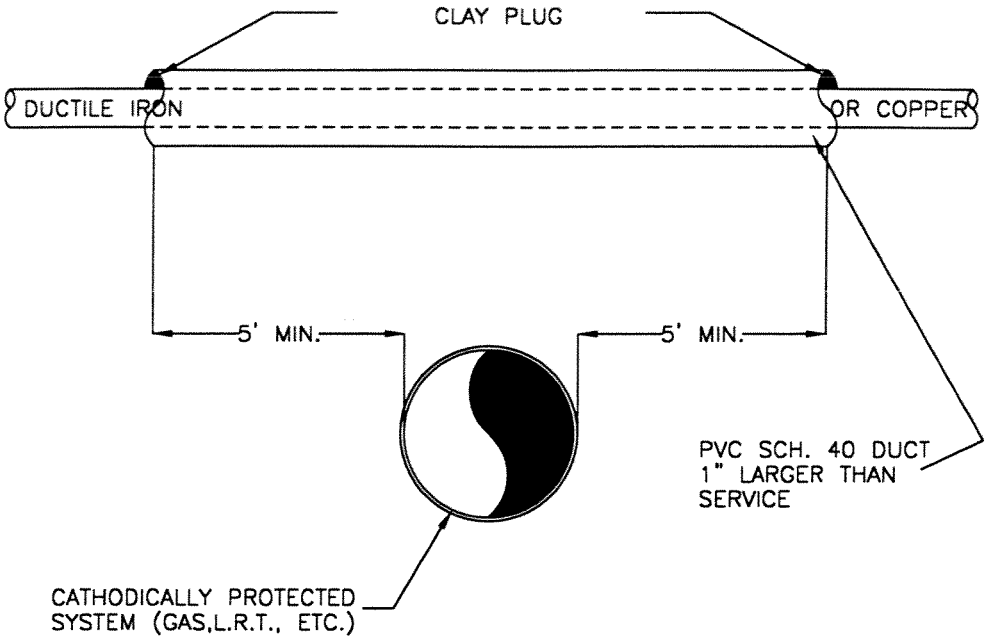

City of Newberg
414 E. FIRST STREET
NEWBERG, OREGON 97132

CATHODIC PROTECTION

SCALE: N.T.S.	
DATE:	JUNE 2000
APP. BY:	L. ANDERSON
STANDARD DRAWING	318

EXHIBIT "C" TO
RESOLUTION NO. 2011-2936

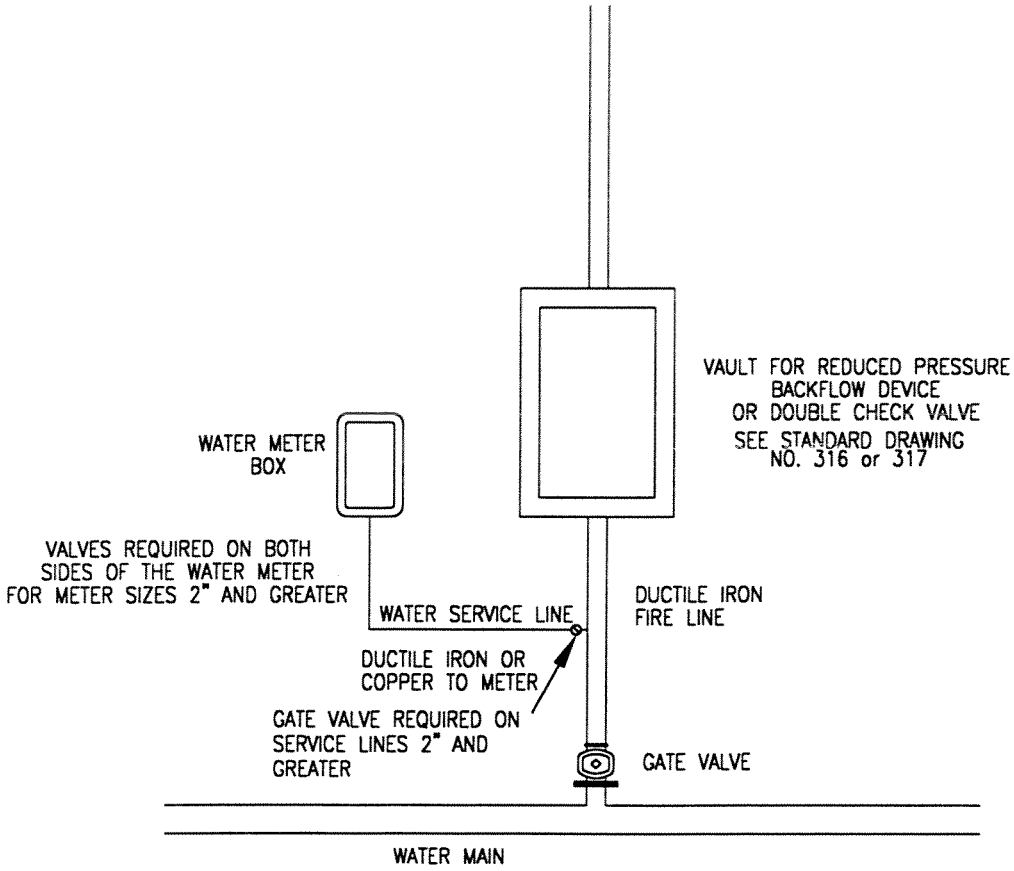

City of Newberg
414 E. FIRST STREET
NEWBERG, OREGON 97132

VAULT AND
WATER SERVICE

SCALE: N.T.S.	
DATE:	JUNE 2000
APP. BY:	L. ANDERSON
STANDARD DRAWING	319

EXHIBIT "C" TO
RESOLUTION NO. 2011-2936

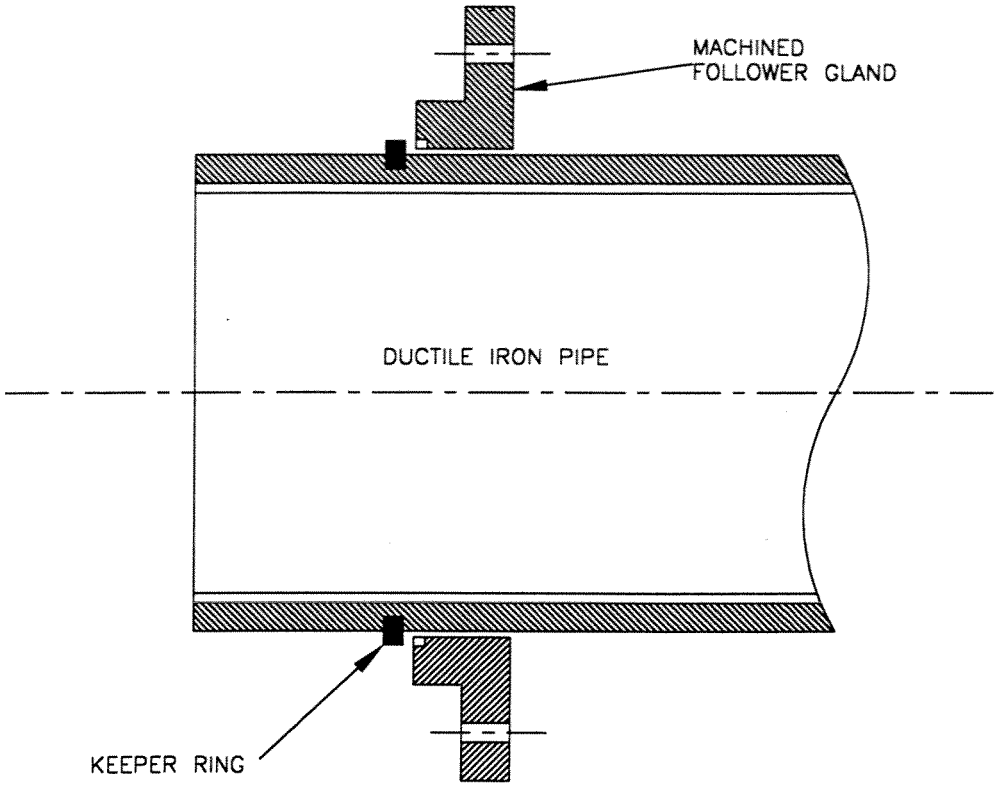

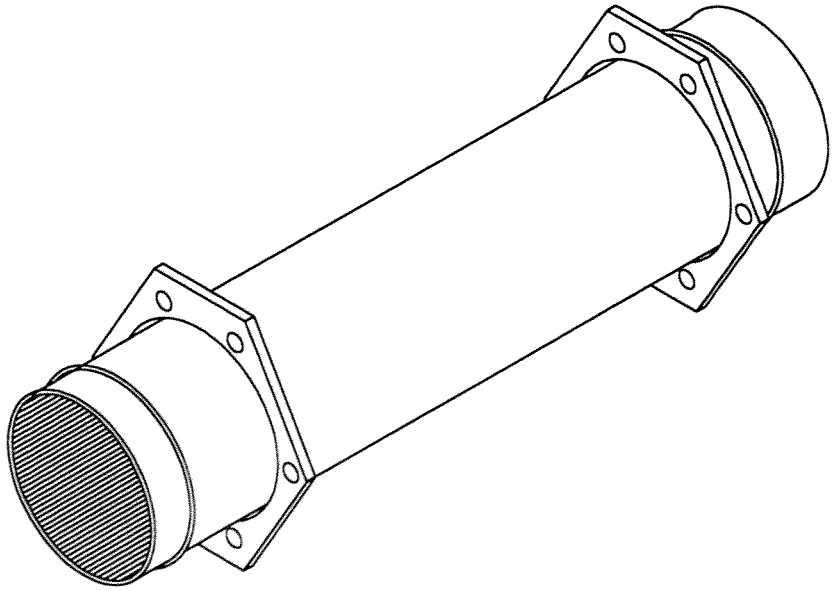

City of Newberg
414 E. FIRST STREET
NEWBERG, OREGON 97132

MJ HOLDING SPOOL

SCALE: N.T.S.	
DATE:	JUNE 2000
APP. BY:	L. ANDERSON
STANDARD DRAWING	320

EXHIBIT "C" TO
RESOLUTION NO. 2011-2936

INLET TYPE	W
N-1, CN-1	1'-8 7/8"
N-2, CN-2	2'-3 3/8"

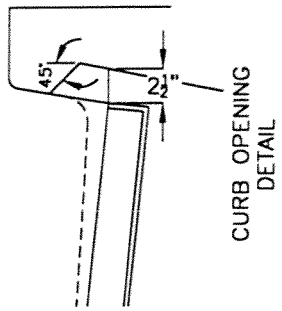

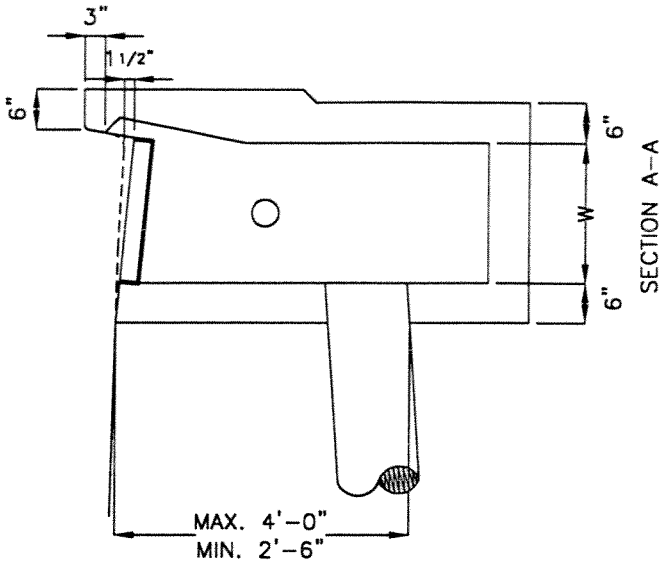

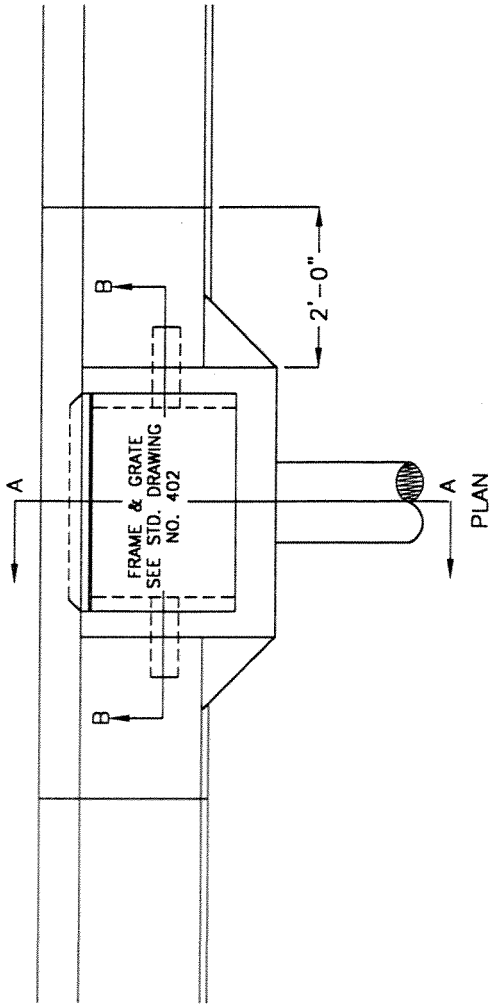

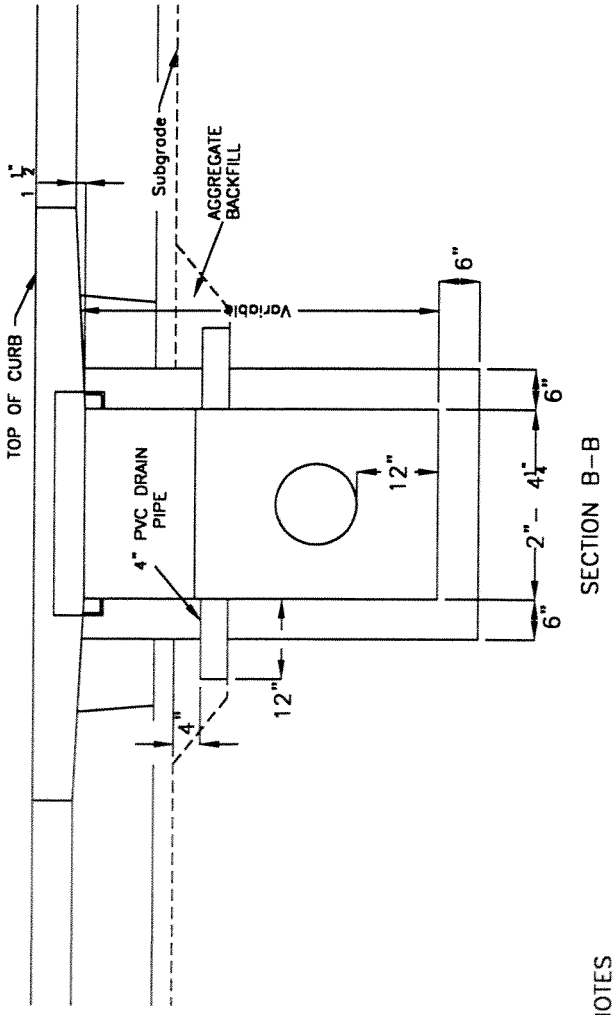

NOTES
1. CONCRETE SHALL HAVE A MINIMUM 28 DAY STRENGTH OF 3000 PSI.
2. CATCH BASIN TO BE CAST IN PLACE.
3. FRAME TO BE SET FLUSH WITH FACE OF CURB.

City of Newberg
414 E. FIRST STREET
NEWBERG, OREGON 97132

CATCH BASIN

SCALE: N.T.S.	
DATE:	JUNE 2000
APP. BY:	L. ANDERSON
STANDARD DRAWING	401

EXHIBIT "C" TO RESOLUTION NO. 2011-2936

FRAME

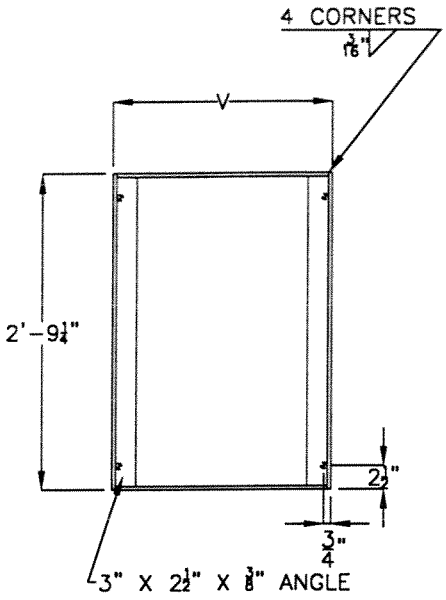

GRATE–TYPE 1

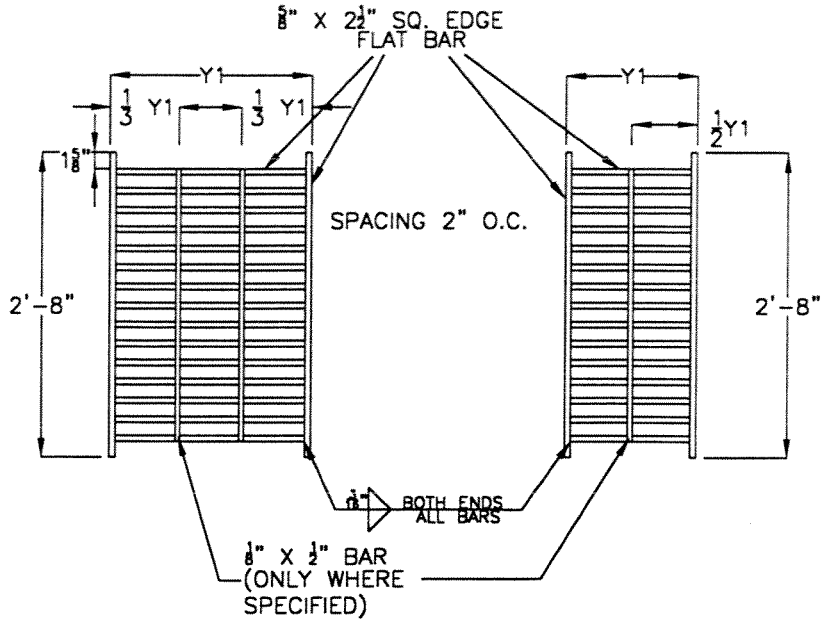

GRATE–TYPE 2

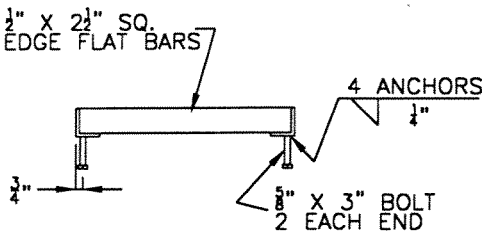

INLET TYPE	V	Y1	NO. OF BARS	TYPE	REMARKS
N–1, CN–1	1'10 3/4"	1'9 3/8"	15	1	
N–2, CN–2	2'4 3/4"	1'1 5/8"	15	2	2 GRATES

NOTES
1. ALL MATERIAL TO BE A–36 STEEL.
2. CROSS BARS TO BE FLUSH WITH THE SURFACE AND MAY BE FILLET WELDED.

City of Newberg
414 E. FIRST STREET
NEWBERG, OREGON 97132

CATCH BASIN
FRAME AND GRATE

SCALE: N.T.S.
DATE: JUNE 2000
APP. BY: L. ANDERSON
STANDARD DRAWING 402

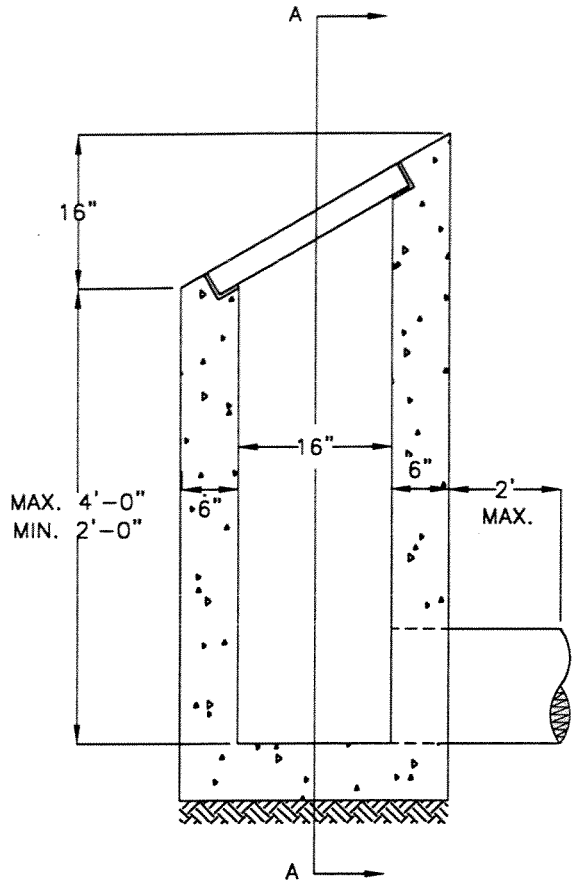

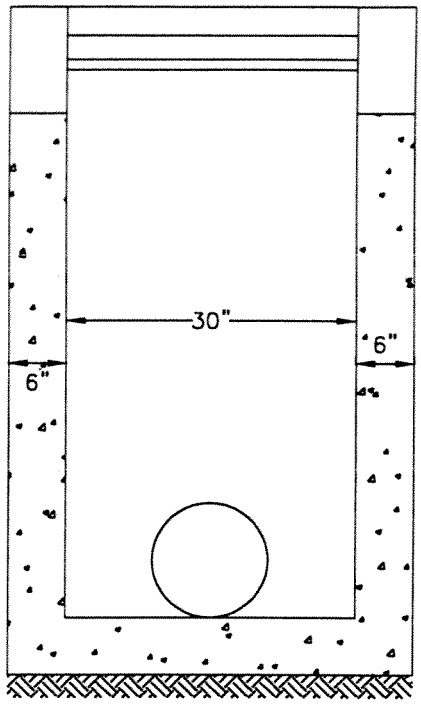

SECTION A-A

NOTES
1. CONCRETE SHALL HAVE MIN. STRENGTH OF 3000 PSI AT 28 DAYS.
2. SEE STANDARD DRAWING NO. 404 FOR FRAME AND GRATE.

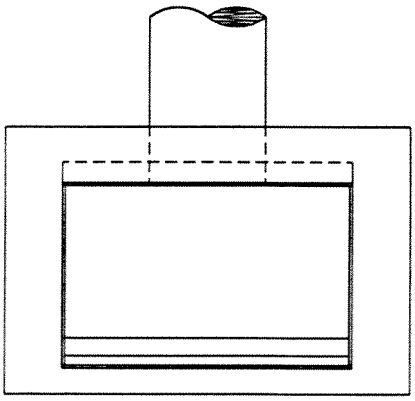

PLAN VIEW

City of Newberg
414 E. FIRST STREET
NEWBERG, OREGON 97132

DITCH INTERCEPTOR

SCALE: N.T.S.	
DATE:	JUNE 2000
APP. BY:	L. ANDERSON
STANDARD DRAWING	403

EXHIBIT "C" TO
RESOLUTION NO. 2011-2936

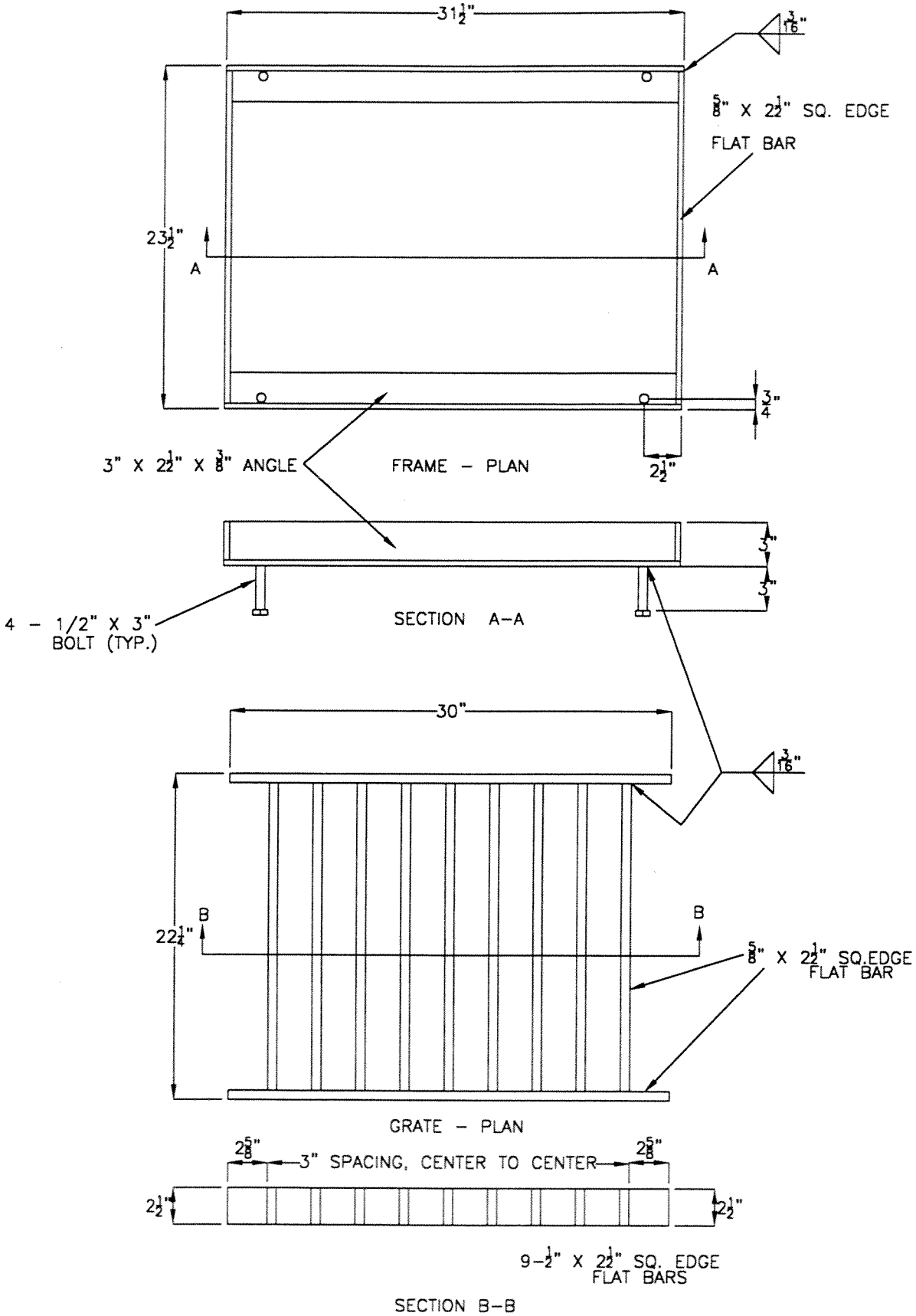

City of Newberg
414 E. FIRST STREET
NEWBERG, OREGON 97132

DITCH INTERCEPTOR
FRAME AND GRATE

SCALE: N.T.S.	
DATE:	JUNE 2000
APP. BY:	L. ANDERSON
STANDARD DRAWING	404

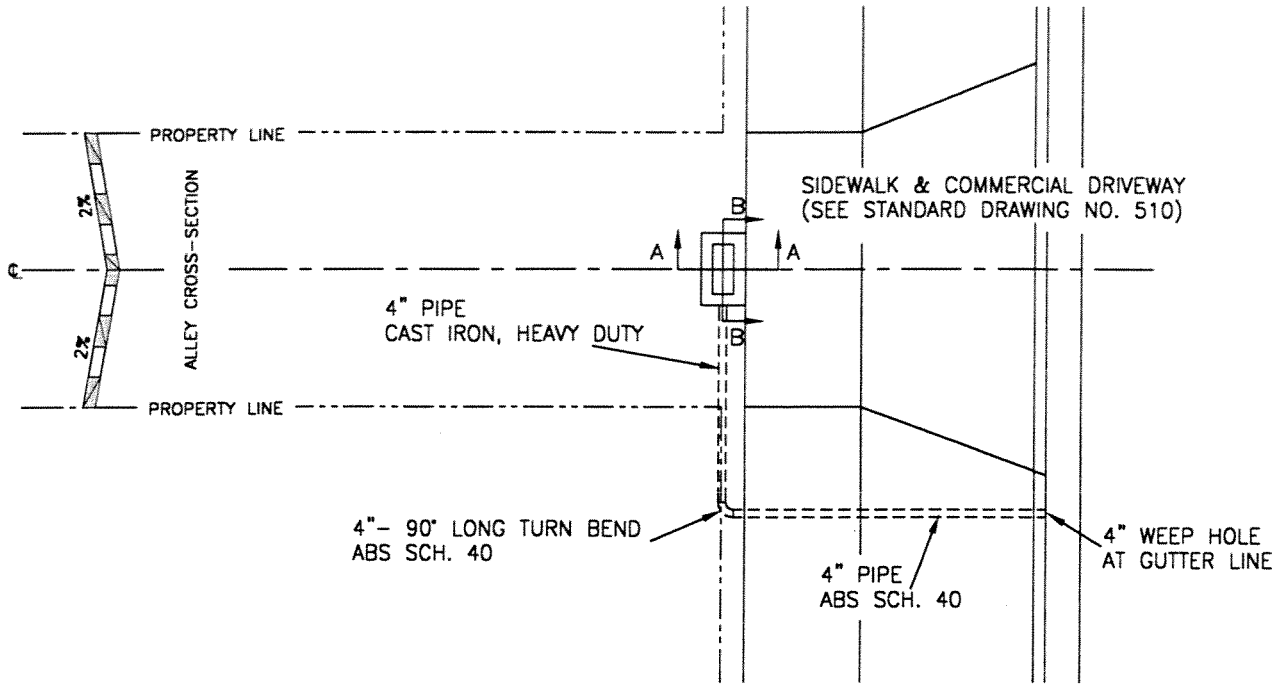

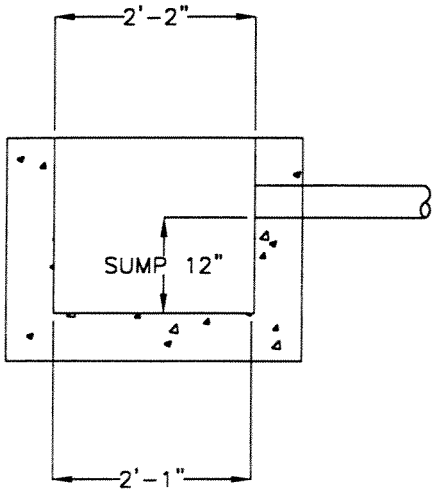

SECTION B-B

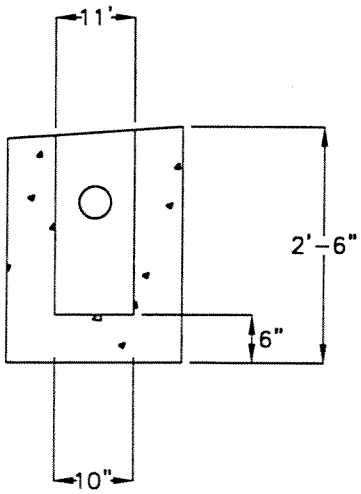

SECTION A-A

NOTES
1. USE ONLY FOR LOCATIONS WITH NO STORM SEWER IN ADJACENT STREET.
2. MINIMUM PIPE SLOPE 1% OR 1/8" PER FOOT.
3. CATCH BASIN TO BE CAST IN PLACE.
4. CONCRETE SHALL OBTAIN 3000 PSI STRENGTH AT 28 DAYS.

City of Newberg
414 E. FIRST STREET
NEWBERG, OREGON 97132

VALLEY GUTTER
CATCH BASIN

SCALE: N.T.S.	
DATE:	JUNE 2000
APP. BY:	L. ANDERSON
STANDARD DRAWING	405

EXHIBIT "C" TO
RESOLUTION NO. 2011-2936

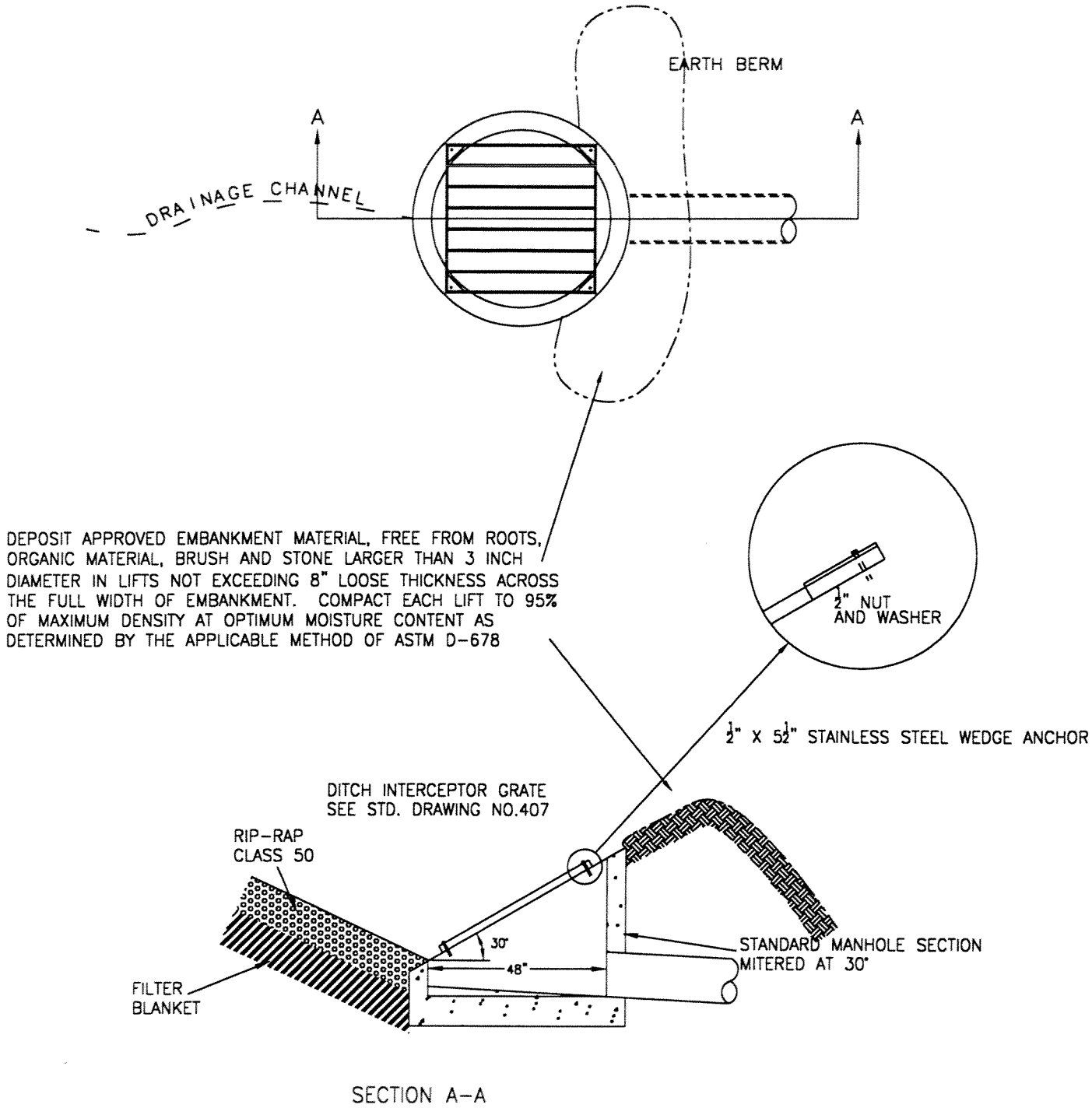

City of Newberg
414 E. FIRST STREET
NEWBERG, OREGON 97132

DITCH INTERCEPTOR TYPE "B"

SCALE: N.T.S.	
DATE:	JUNE 2000
APP. BY:	L. ANDERSON
STANDARD DRAWING	406

EXHIBIT "C" TO
RESOLUTION NO. 2011-2936

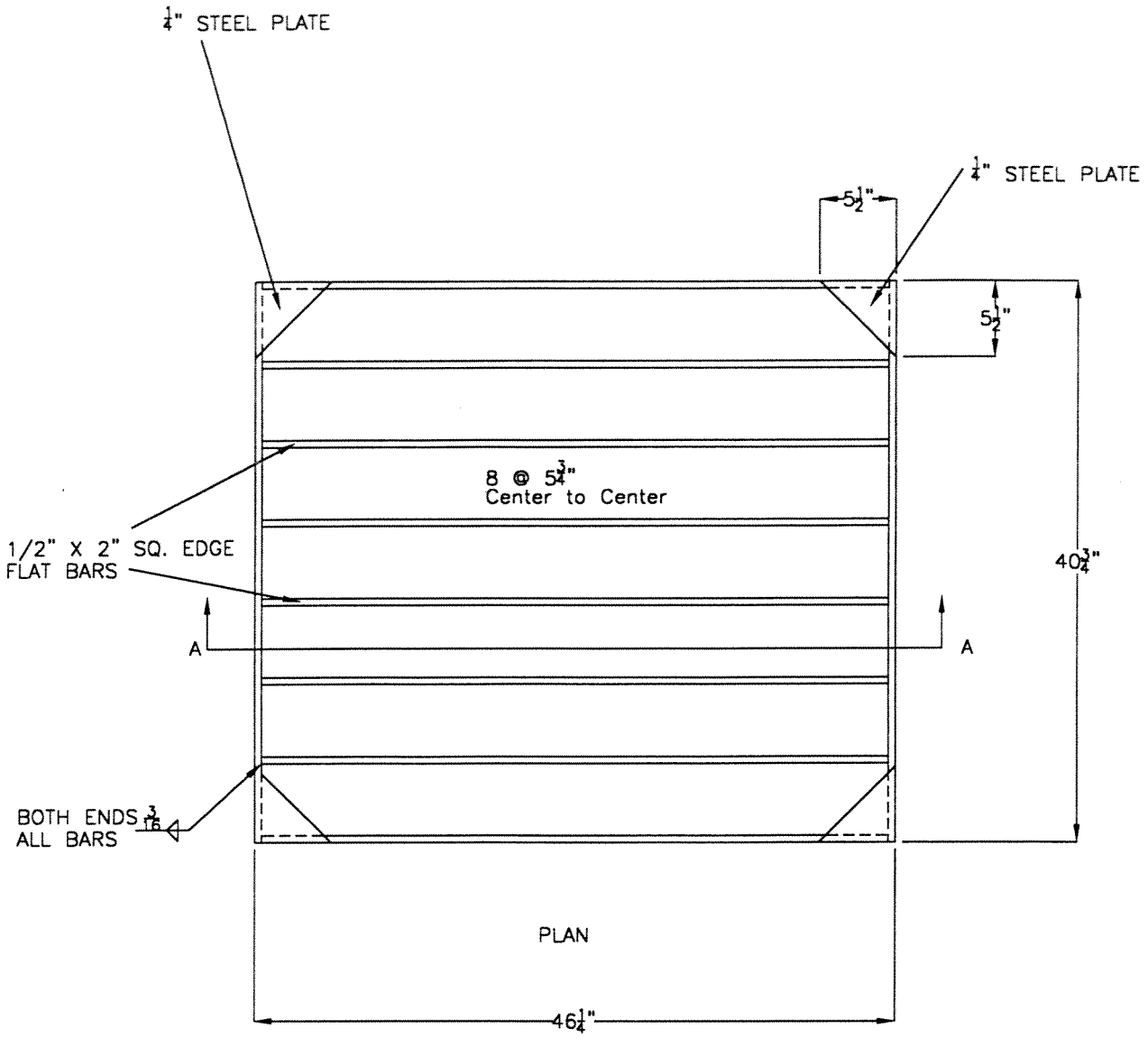

MATERIAL TO BE NEW STRUCTURAL STEEL, ASTM A-7, A-36 OR A-373

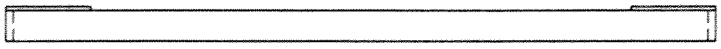

SECTION A-A

City of Newberg 414 E. FIRST STREET NEWBERG, OREGON 97132	DITCH INTERCEPTOR TYPE "B" GRATE	SCALE: N.T.S. DATE: JUNE 2000 APP. BY: L. ANDERSON STANDARD DRAWING 407

EXHIBIT "C" TO
RESOLUTION NO. 2011-2936

NOTES:
CONCRETE SHALL ATTAIN A STRENGTH OF 3000 PSI AT 28 DAYS
TOP AND COVER SHALL BE REINFORCED WITH 4" X 4" #6 WIRE MESH REINFORCING.
ALL METAL PARTS SHALL BE HOT DIPPED GALVANIZED AFTER FABRICATION.

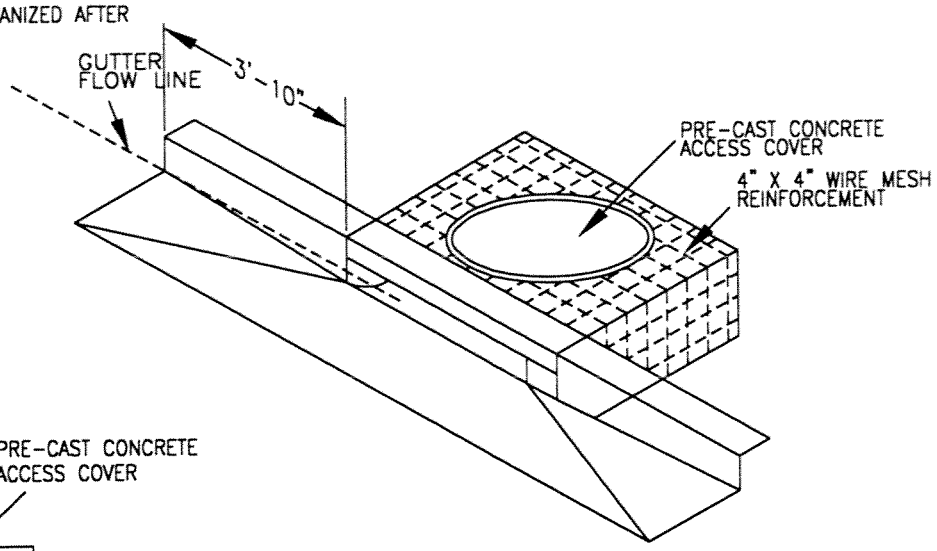

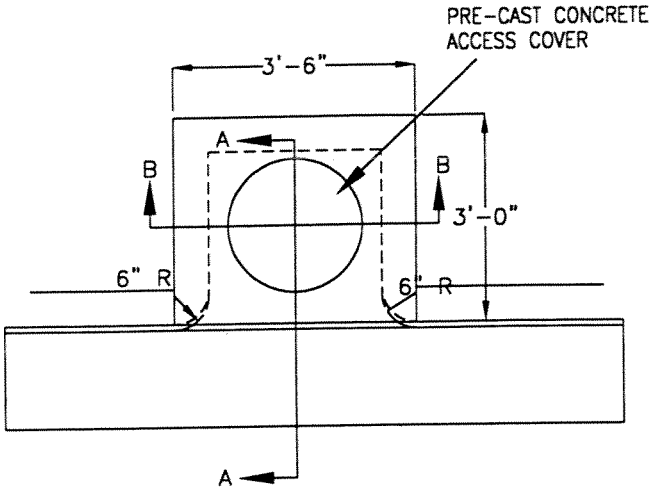

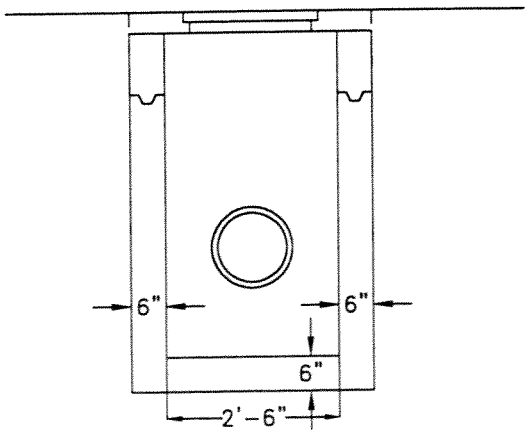

BASE SECTION
BASE MAY BE PRE-CAST OR CAST IN PLACE
SECTION B-B

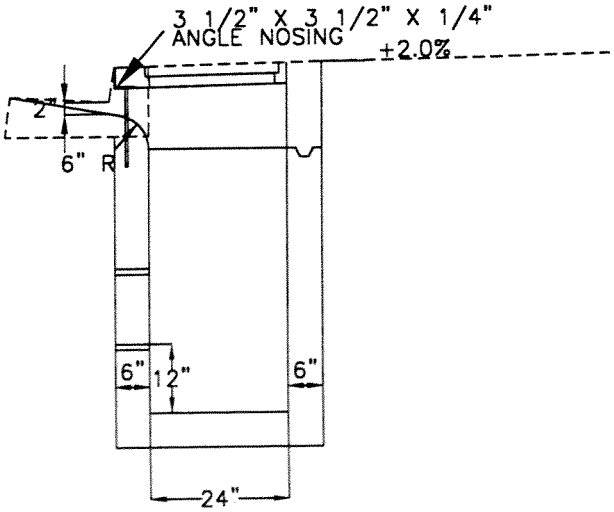

BASE SECTION
BASE MAY BE PRE-CAST OR CAST IN PLACE
SECTION A-A

City of Newberg
414 E. FIRST STREET
NEWBERG, OREGON 97132

PELICAN CATCH BASIN

SCALE: N.T.S.	
DATE:	JUNE 2000
APP. BY:	L. ANDERSON
STANDARD DRAWING	408

EXHIBIT "C" TO
RESOLUTION NO. 2011-2936

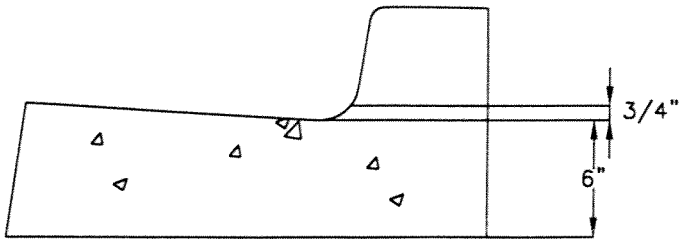

CURB AND GUTTER AT DRIVEWAY APPROACH

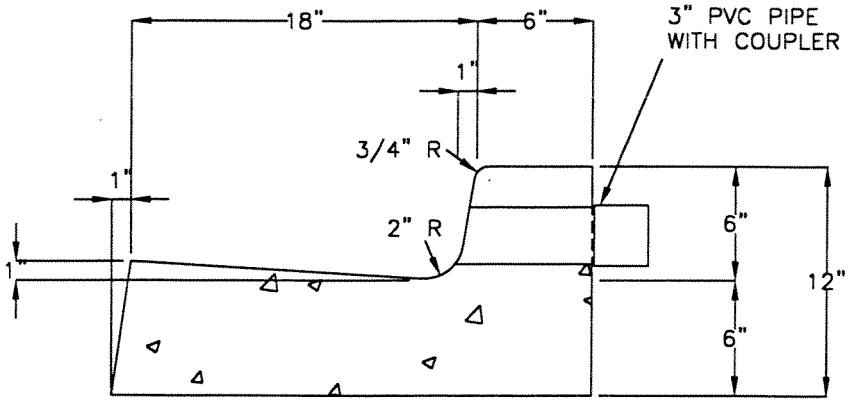

CURB AND GUTTER

NOTES

1. CONCRETE SHALL HAVE STRENGTH OF 3000 P.S.I. AT 28 DAYS.
2. TRANSVERSE CONTRACTION JOINTS – MAKE 1/8" X 1 1/2" DEEP CUT; SPACED AT 15'. PROVIDE CONTRACTION JOINTS AT CURB RETURN POINTS, CATCH BASINS AND DRIVEWAYS.
3. SCORE CURB OVER WEEP HOLE BLOCK OUT.
4. EXPANSION JOINTS SHALL NOT BE USED.
5. APPLY CURING COMPOUND (PETROLEUM BASED) TO FRESH CONCRETE TO RETAIN MOISTURE.
6. TOP OF CURB BRANDED WITH "S" OR "W", 2" MIN. HEIGHT FOR SEWER AND WATER LOCATIONS. HAND SCRIBING NOT ALLOWED.

City of Newberg 414 E. FIRST STREET NEWBERG, OREGON 97132	CURB AND GUTTER	SCALE: N.T.S. DATE: JUNE 2000 APP. BY: L. ANDERSON STANDARD DRAWING 501

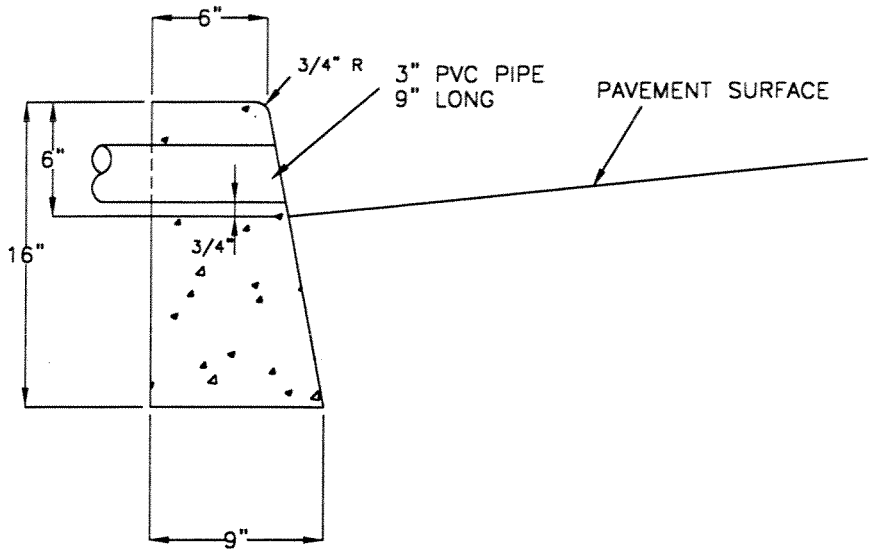

NOTES
1. CONCRETE SHALL HAVE STRENGTH OF 3000 P.S.I. AT 28 DAYS.
2. TRANSVERSE CONTRACTION JOINTS – 1/8" X 1 1/2" DEEP CUT SPACED AT 15' INTERVALS.
3. THIS TYPE OF CURB TO BE USED ONLY WHERE SPECIFIED.
4. APPLY CURING COMPOUND (PETROLEUM BASE) TO FRESH CONCRETE TO RETAIN MOISTURE.

City of Newberg 414 E. FIRST STREET NEWBERG, OREGON 97132	CURB - TYPE "C"	SCALE: N.T.S. DATE: JUNE 2000 APP. BY: L. ANDERSON STANDARD DRAWING 502

EXHIBIT "C" TO
RESOLUTION NO. 2011-2936

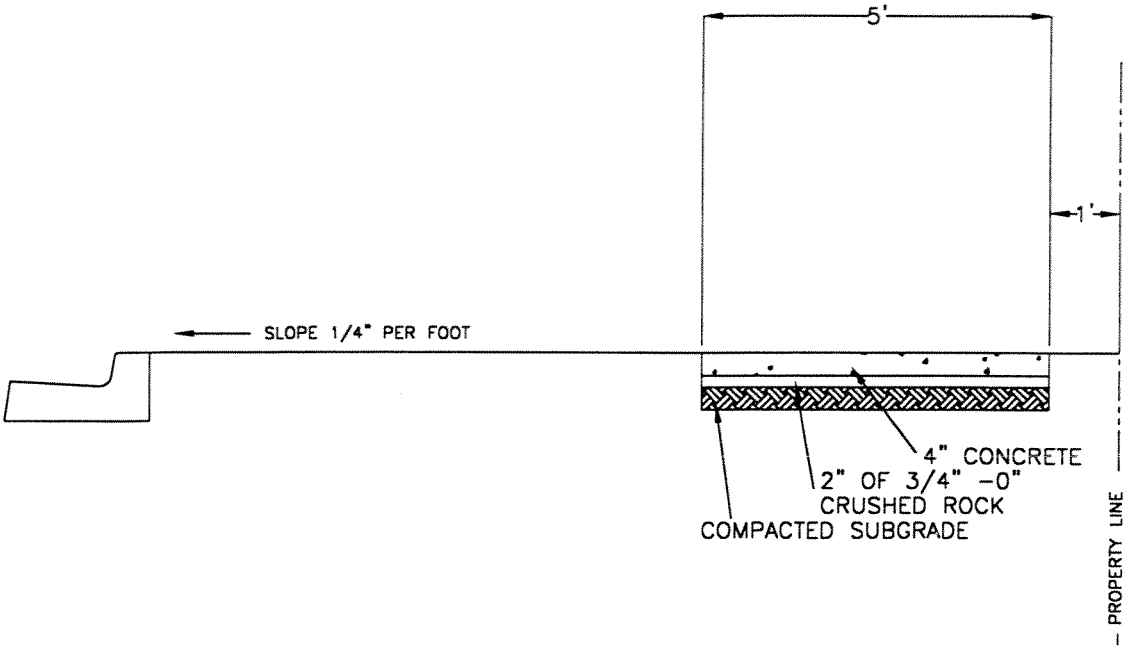

NOTES

1. SLOPE FROM THE PROPERTY LINE TO THE STREET AT 2.00%.
2. WORK AGGREGATE INTO CONCRETE PRIOR TO FINISHING CONCRETE.
3. FINISHING DETAILS
   EDGE CONCRETE WITH 3" EDGING TROWEL.
   SCORE CONCRETE AT 5' INTERVALS.
   INSTALL 1/8" X 1 1/2" CONTRACTION JOINTS EVERY 15'.
   FABRIC TYPE EXPANSION JOINT NOT TO BE USED
   APPLY LIGHT BROOM FINISH TRANSVERSE TO THE SIDEWALK.
4. CONCRETE SHALL HAVE STRENGTH OF 3000 P.S.I. AT 28 DAYS.
5. APPLY CURING COMPOUND (PETROLEUM BASE) TO FRESH CONCRETE TO RETAIN MOISTURE.
6. TOLERANCES
   SURFACE SHALL NOT VARY MORE THAN 1/4" FROM A 10' STRAIGHT EDGE.
   ALIGNMENT SHALL BE WITHIN 1/4" OF TRUE LINE.

City of Newberg 414 E. FIRST STREET NEWBERG, OREGON 97132	SIDEWALK TYPE "A"	SCALE: N.T.S. DATE: JUNE 2000 APP. BY: L. ANDERSON STANDARD DRAWING 503

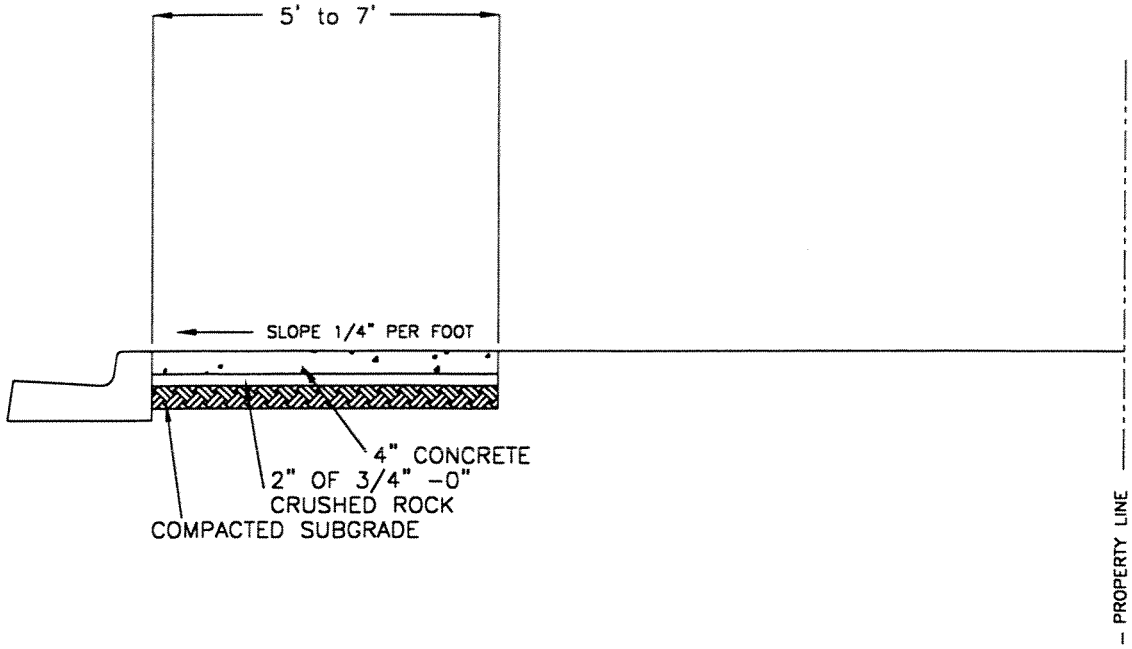

NOTES
1. SLOPE FROM THE PROPERTY LINE TO THE STREET AT 2.00%.
2. WORK AGGREGATE INTO CONCRETE PRIOR TO FINISHING CONCRETE.
3. FINISHING DETAILS.
   EDGE CONCRETE WITH 3" EDGING TROWEL.
   SCORE CONCRETE AT 5' INTERVALS.
   INSTALL 1/8" X 1 1/2" CONTRACTION JOINTS EVERY 15'.
   FABRIC TYPE EXPANSION JOINT NOT TO BE USED.
   APPLY LIGHT BROOM FINISH TRANSVERSE TO THE SIDEWALK
4. CONCRETE SHALL HAVE STRENGTH OF 3000 P.S.I. AT 28 DAYS.
5. APPLY CURING COMPOUND (PETROLEUM BASE) TO FRESH CONCRETE TO RETAIN MOISTURE.
6. TOLERANCES
   SURFACE SHALL NOT VARY MORE THAN 1/4" FROM A 10' STRAIGHT EDGE.
   ALIGNMENT SHALL BE WITHIN 1/4" OF TRUE LINE.

City of Newberg 414 E. FIRST STREET NEWBERG, OREGON 97132	SIDEWALK TYPE "B"	SCALE: N.T.S. DATE: JUNE 2000 APP. BY: L. ANDERSON STANDARD DRAWING 504

EXHIBIT "C" TO
RESOLUTION NO. 2011-2936

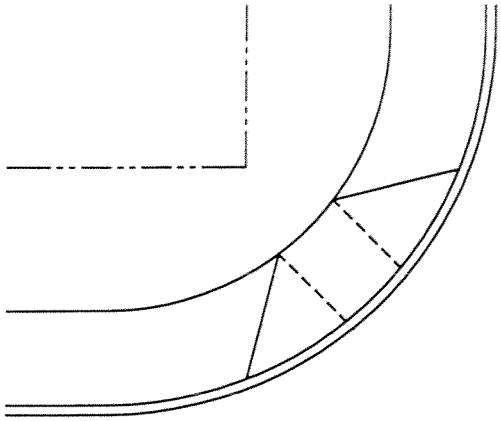

A

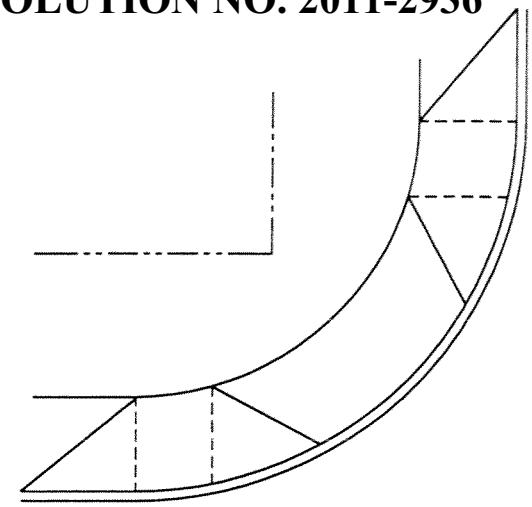

B

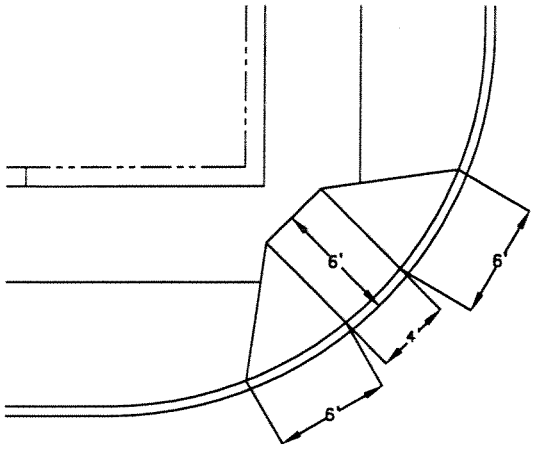

C

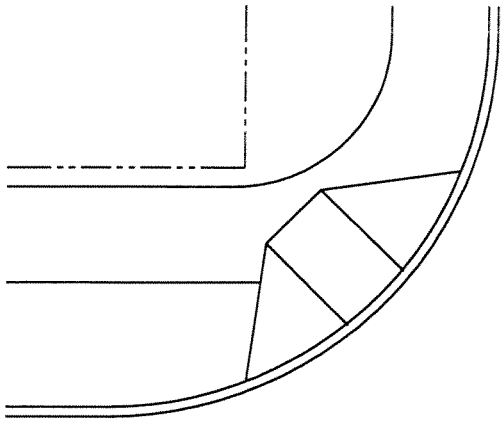

D

City of Newberg
414 E. FIRST STREET
NEWBERG, OREGON 97132

CURB RAMP LOCATIONS

SCALE: N.T.S.	
DATE:	JUNE 2000
APP. BY:	L. ANDERSON
STANDARD DRAWING	505

EXHIBIT "C" TO
RESOLUTION NO. 2011-2936

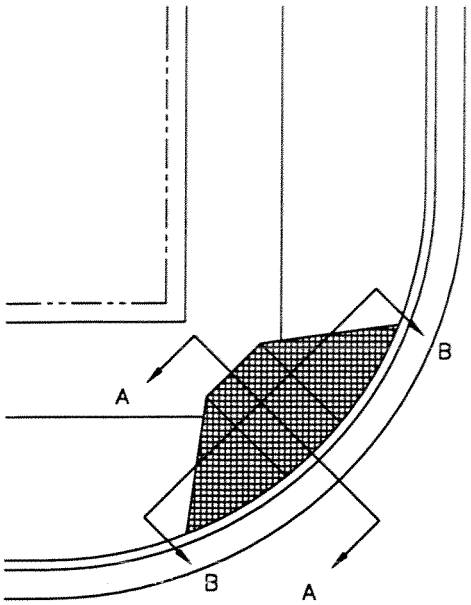

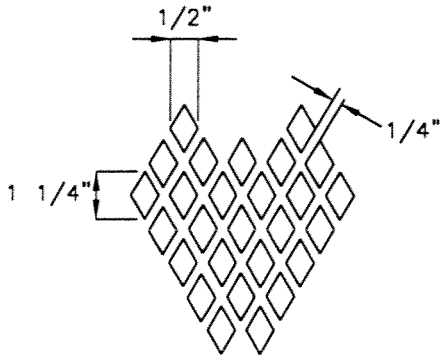

FIGURE A
RAMP TEXTURE DETAIL

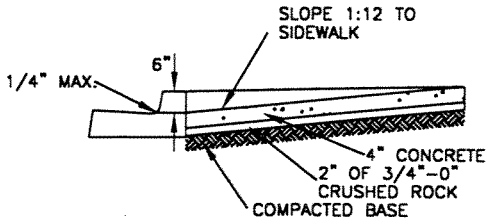

SECTION A-A

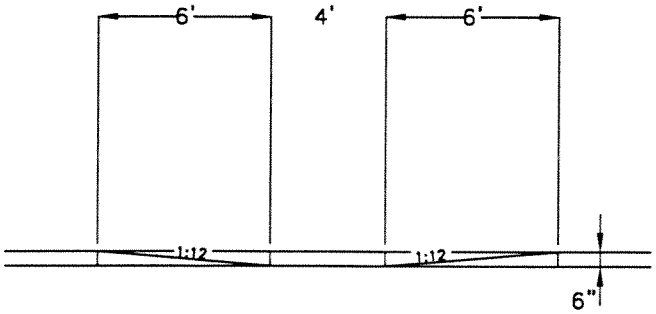

SECTION B-B

NOTES

1. CONCRETE SHALL HAVE STRENGTH OF 3000 P.S.I. AT 28 DAYS.
2. SIDEWALK RAMPS ARE REQUIRED AT ALL NEW INTERSECTIONS.
3. REPLACEMENT CURBS MUST BE POURED AGAINST A VERTICAL EDGE OF REMAINING CURB.
4. CONCRETE IN A REPLACEMENT CURB SHALL NOT PROTRUDE PAST THE FACE OF THE CURB IN THE ASPHALT REPLACEMENT AREA.
5. HORIZONTAL AND VERTICAL ALIGNMENT SHALL BE WITHIN 1/8" IN 10'.

City of Newberg
414 E. FIRST STREET
NEWBERG, OREGON 97132

SIDEWALK RAMP
TYPE "A" SIDEWALK

SCALE: N.T.S.	
DATE:	JUNE 2000
APP. BY:	L. ANDERSON
STANDARD DRAWING	506

EXHIBIT "C" TO
RESOLUTION NO. 2011-2936

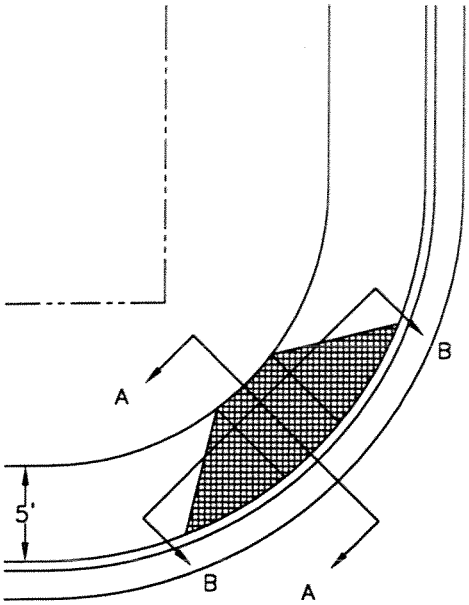

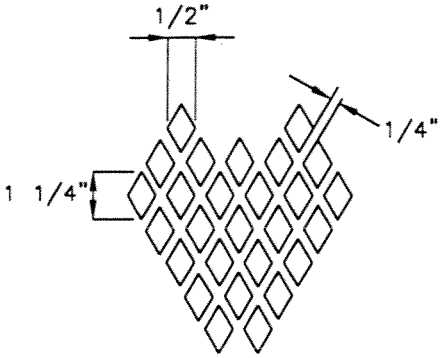

FIGURE A
RAMP TEXTURE DETAIL

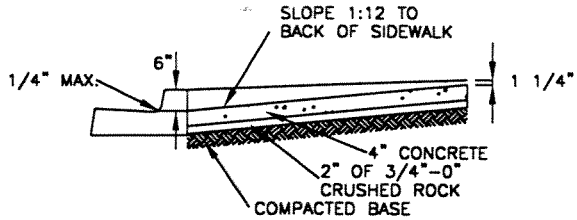

SECTION A–A

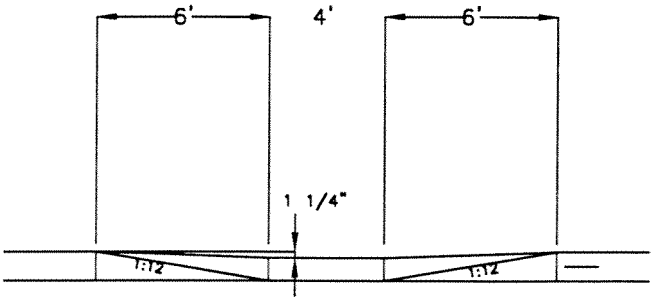

SECTION A–A

NOTES

1. CONCRETE SHALL HAVE STRENGTH OF 3000 P.S.I. AT 28 DAYS.
2. SIDEWALK RAMPS ARE REQUIRED AT ALL NEW INTERSECTIONS.
3. REPLACEMENT CURBS MUST BE POURED AGAINST A VERTICAL EDGE OF REMAINING CURB.
4. CONCRETE IN A REPLACEMENT CURB SHALL NOT PROTRUDE PAST THE FACE OF THE CURB IN THE ASPHALT REPLACEMENT AREA.
5. HORIZONTAL AND VERTICAL ALIGNMENT SHALL BE WITHIN 1/8" IN 10'.

City of Newberg
414 E. FIRST STREET
NEWBERG, OREGON 97132

SIDEWALK RAMP
TYPE "B" SIDEWALK

SCALE: N.T.S.	
DATE:	JUNE 2000
APP. BY:	L. ANDERSON
STANDARD DRAWING	507

EXHIBIT "C" TO
RESOLUTION NO. 2011-2936

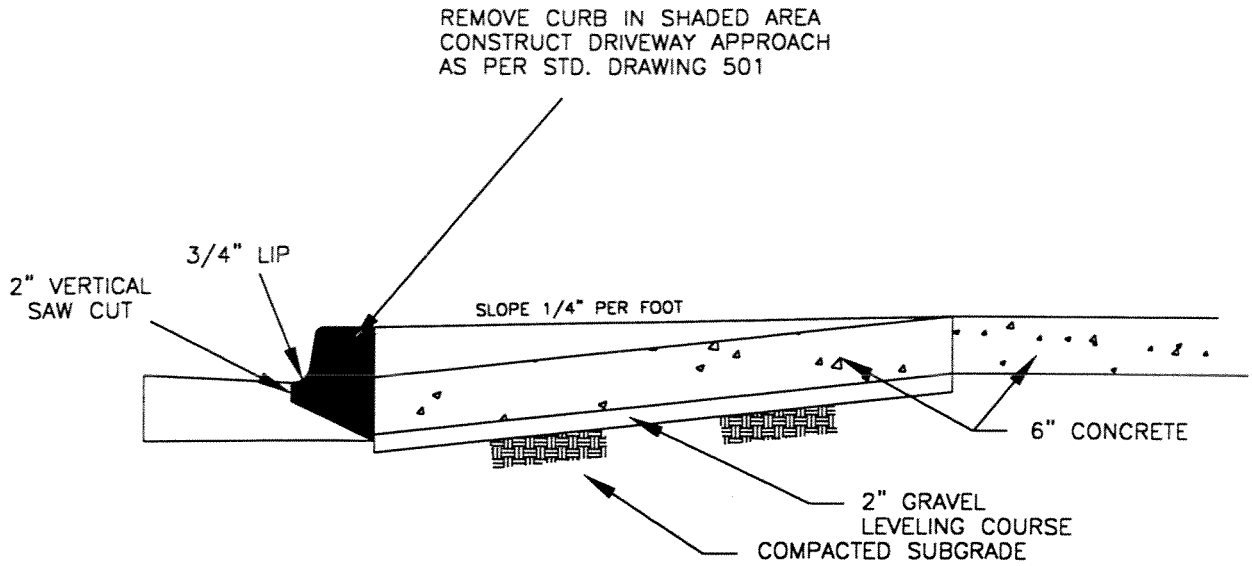

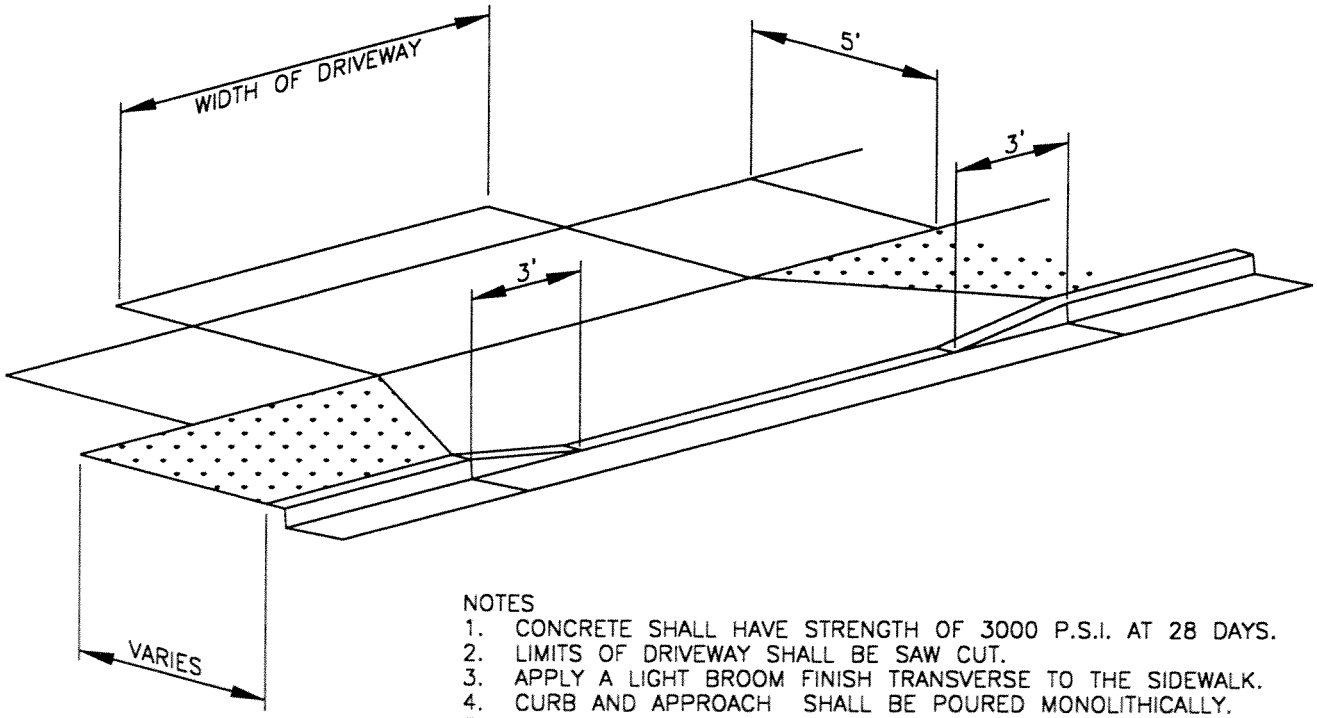

NOTES
1. CONCRETE SHALL HAVE STRENGTH OF 3000 P.S.I. AT 28 DAYS.
2. LIMITS OF DRIVEWAY SHALL BE SAW CUT.
3. APPLY A LIGHT BROOM FINISH TRANSVERSE TO THE SIDEWALK.
4. CURB AND APPROACH SHALL BE POURED MONOLITHICALLY.
5. IF WIDTH IS GREATER THAN 15 FEET, INSTALL CONTRACTION JOINT IN CENTER OF THE DRIVEWAY.
6. FABRIC EXPANSION JOINT SHALL NOT BE USED.
7. WORK AGGREGATE INTO CONCRETE PRIOR TO FINISHING CONCRETE.
8. APPLY CURING COMPOUND TO FRESH CONCRETE TO RETAIN MOISTURE.

City of Newberg 414 E. FIRST STREET NEWBERG, OREGON 97132	DRIVEWAY APRON CURB CUT TYPE "A" SIDEWALK	SCALE: N.T.S. DATE: JUNE 2000 APP. BY: L. ANDERSON STANDARD DRAWING 508

EXHIBIT "C" TO
RESOLUTION NO. 2011-2936

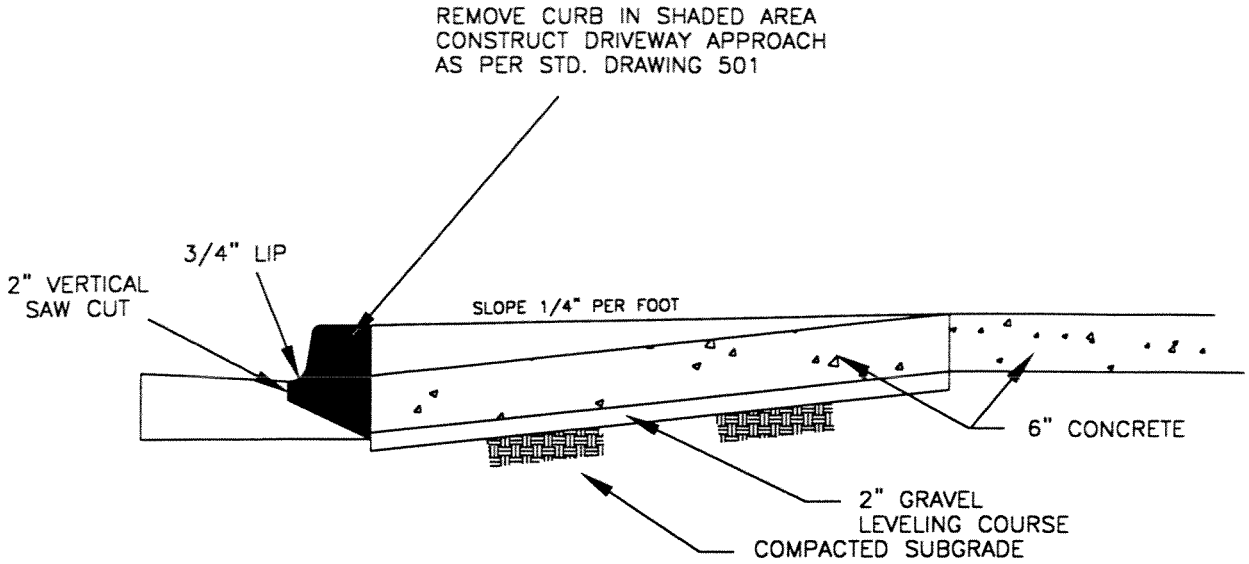

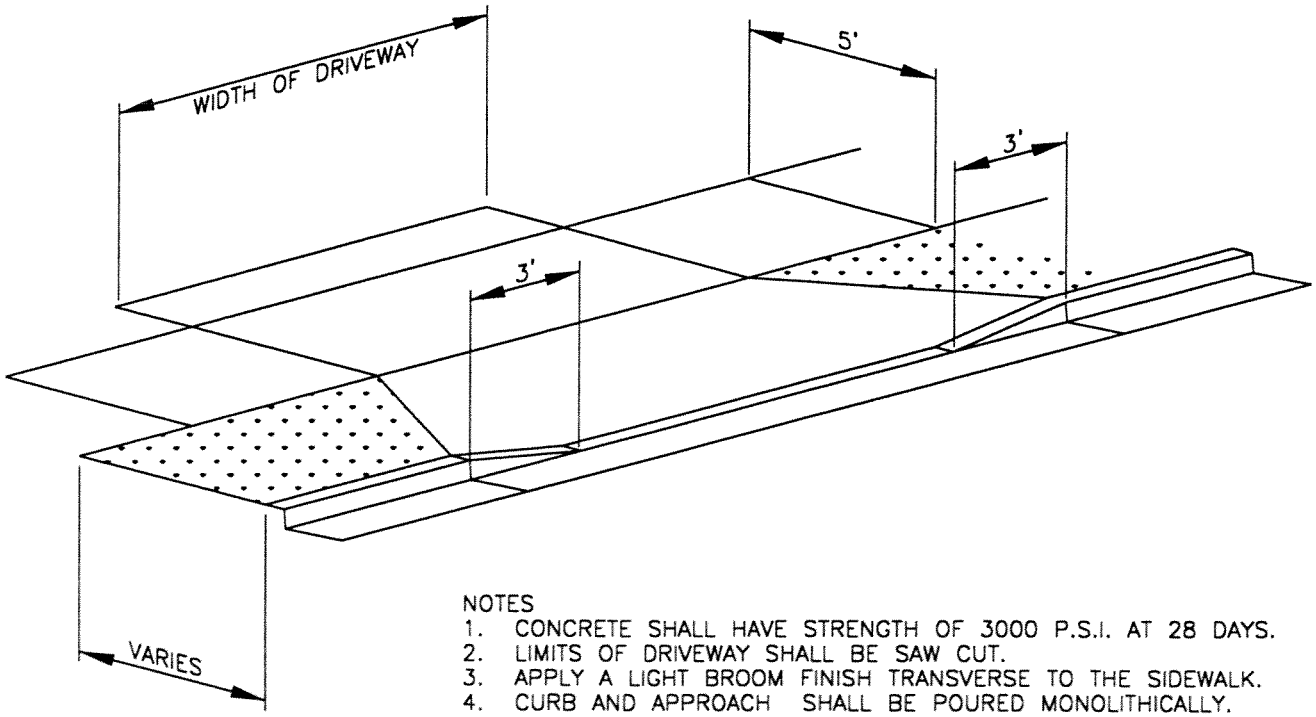

NOTES
1. CONCRETE SHALL HAVE STRENGTH OF 3000 P.S.I. AT 28 DAYS.
2. LIMITS OF DRIVEWAY SHALL BE SAW CUT.
3. APPLY A LIGHT BROOM FINISH TRANSVERSE TO THE SIDEWALK.
4. CURB AND APPROACH SHALL BE POURED MONOLITHICALLY.
5. IF WIDTH IS GREATER THAN 15 FEET, INSTALL CONTRACTION JOINT IN CENTER OF THE DRIVEWAY.
6. FABRIC EXPANSION JOINT SHALL NOT BE USED.
7. WORK AGGREGATE INTO CONCRETE PRIOR TO FINISHING CONCRETE.
8. APPLY CURING COMPOUND TO FRESH CONCRETE TO RETAIN MOISTURE.

City of Newberg 414 E. FIRST STREET NEWBERG, OREGON 97132	DRIVEWAY APRON CURB CUT TYPE "A" SIDEWALK	SCALE: N.T.S. DATE: JUNE 2000 APP. BY: L. ANDERSON STANDARD DRAWING 508

EXHIBIT "C" TO
RESOLUTION NO. 2011-2936

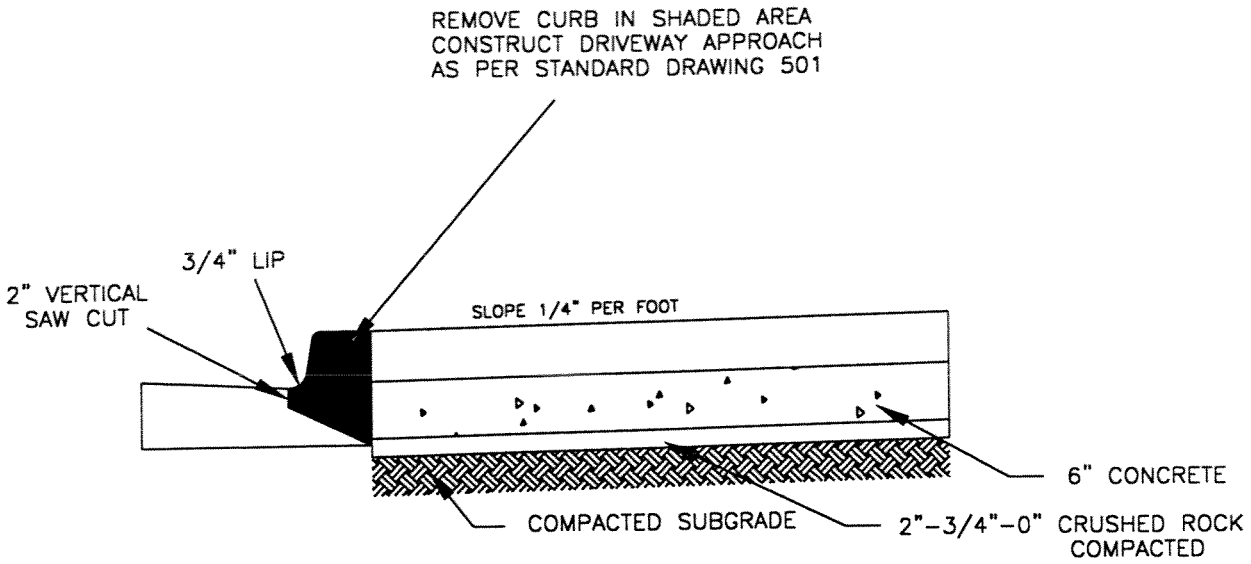

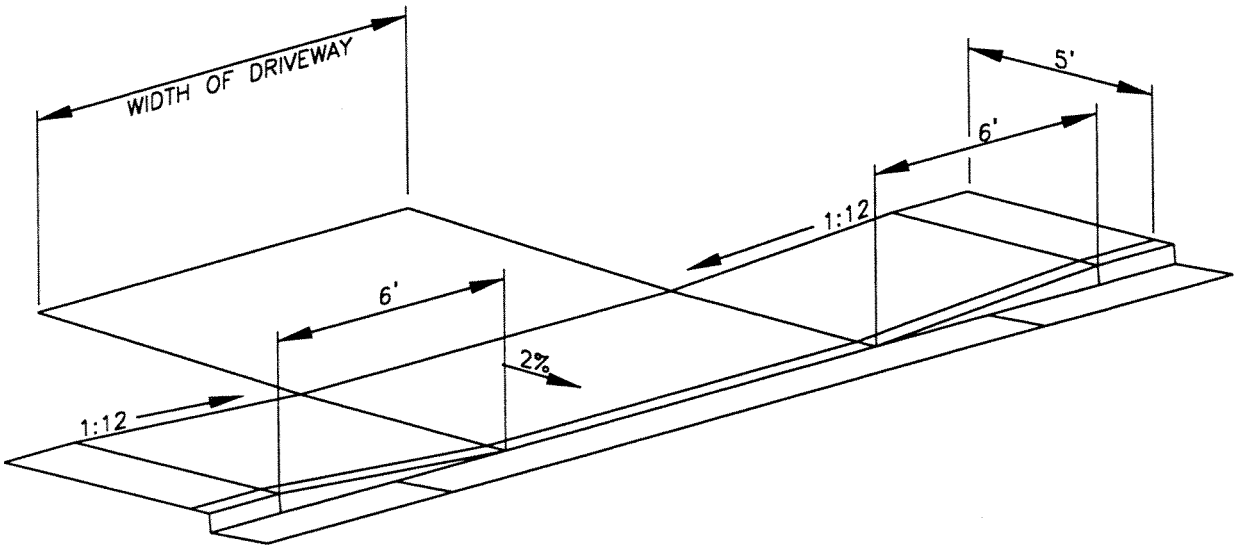

NOTES:
1. CONCRETE SHALL HAVE STRENGTH OF 3000 P.S.I. AT 28 DAYS.
2. LIMITS OF DRIVEWAY SHALL BE SAW CUT.
3. APPLY LIGHT BROOM FINISH TRANSVERSE TO THE SIDEWALK.
4. CURB AND APPROACH SHALL BE POURED MONOLITHICALLY.
5. IF WIDTH IS GREATER THAN 15 FEET, INSTALL CONTRACTION JOINT IN CENTER OF THE DRIVEWAY.
6. FABRIC EXPANSION JOINT SHALL NOT BE USED.
7. WORK AGGREGATE INTO CONCRETE PRIOR TO FINISHING CONCRETE.
8. APPLY CURING COMPOUND TO FRESH CONCRETE TO RETAIN MOISTURE.

City of Newberg 414 E. FIRST STREET NEWBERG, OREGON 97132	DRIVEWAY APRON CURB CUT TYPE "B" SIDEWALK	SCALE: N.T.S. DATE: JUNE 2000 APP. BY: L. ANDERSON STANDARD DRAWING 509

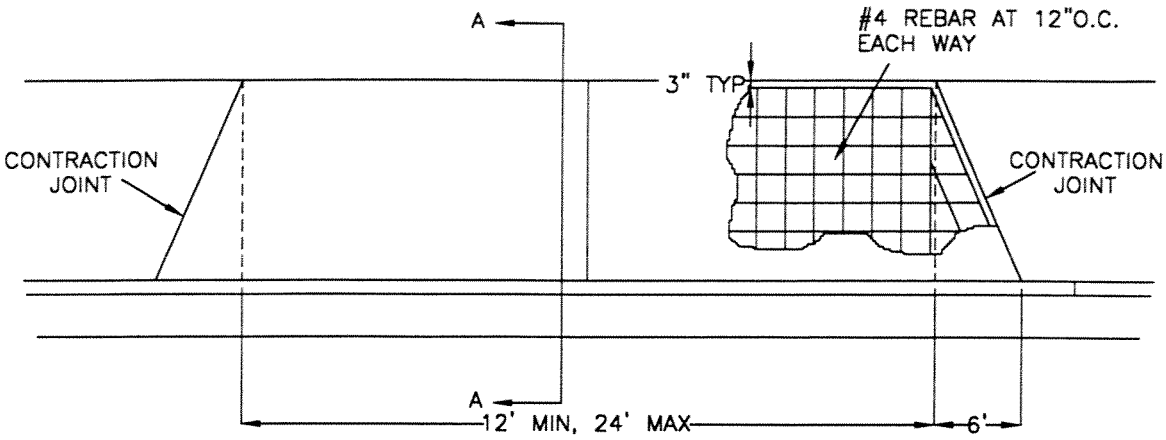

PLAN

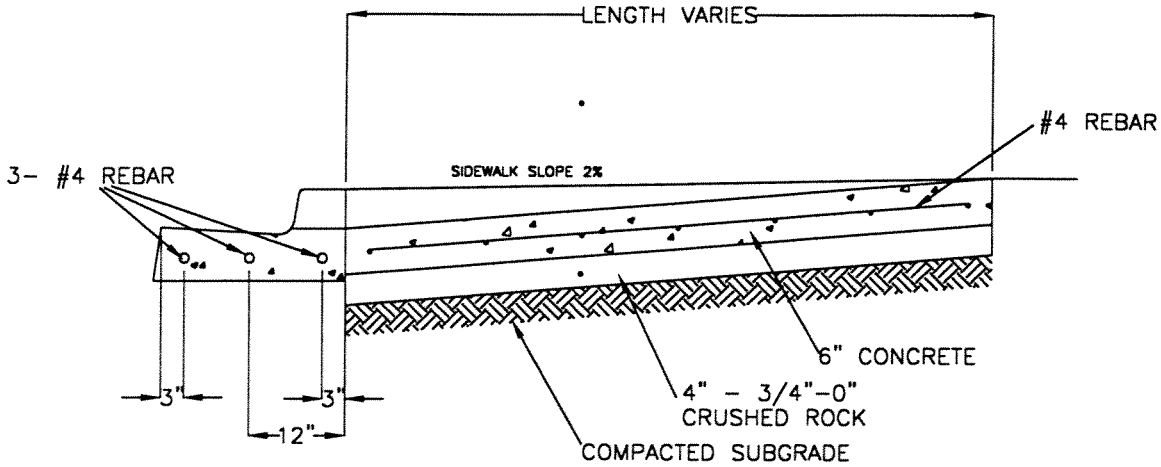

SECTION A–A

NOTES
1. SEE STANDARD DRAWING 501 FOR ADDITIONAL DETAILS.

City of Newberg
414 E. FIRST STREET
NEWBERG, OREGON 97132

COMMERCIAL DRIVEWAY

SCALE: N.T.S.	
DATE:	JUNE 2000
APP. BY:	L. ANDERSON
STANDARD DRAWING	510

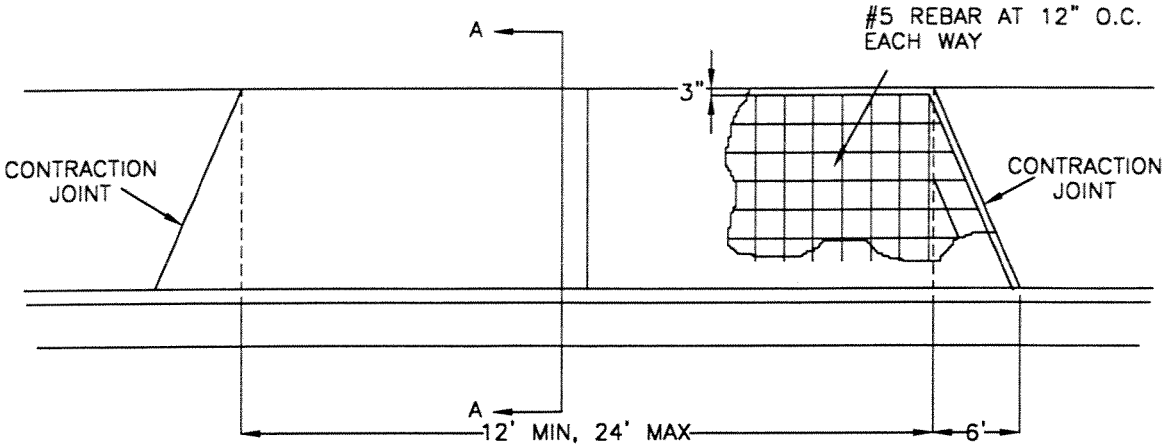

PLAN

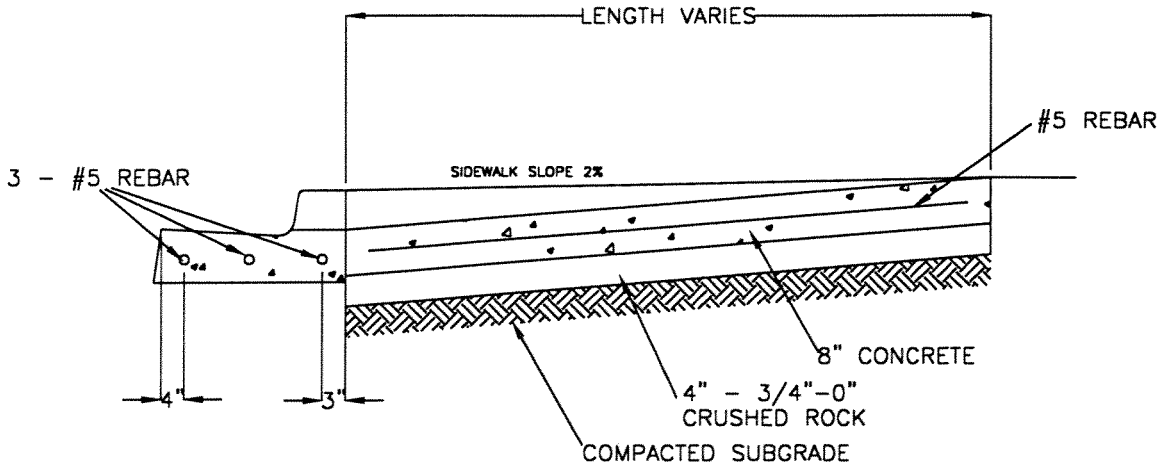

SECTION A–A

NOTES
1. SEE STANDARD DRAWINGS 501 AND 509 FOR ADDITIONAL DETAILS.

City of Newberg
414 E. FIRST STREET
NEWBERG, OREGON 97132

INDUSTRIAL DRIVEWAY

SCALE: N.T.S.	
DATE:	JUNE 2000
APP. BY:	L. ANDERSON
STANDARD DRAWING	511

EXHIBIT "C" TO
RESOLUTION NO. 2011-2936

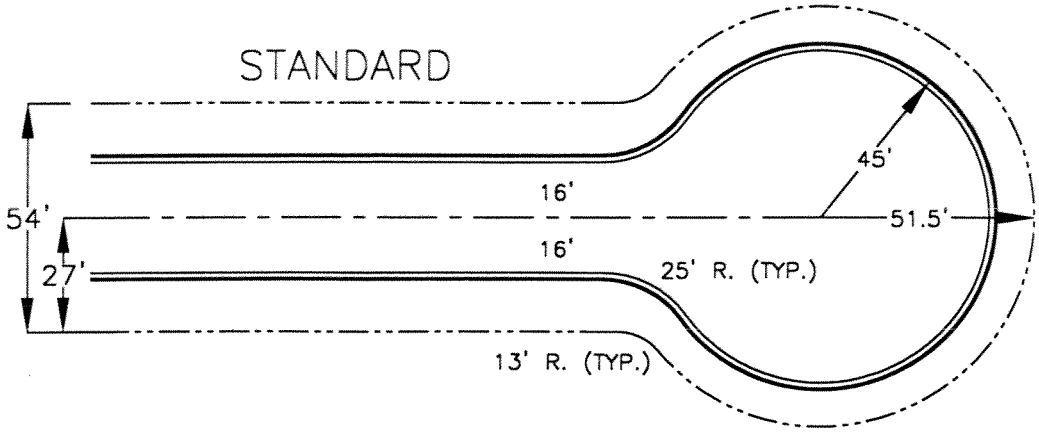

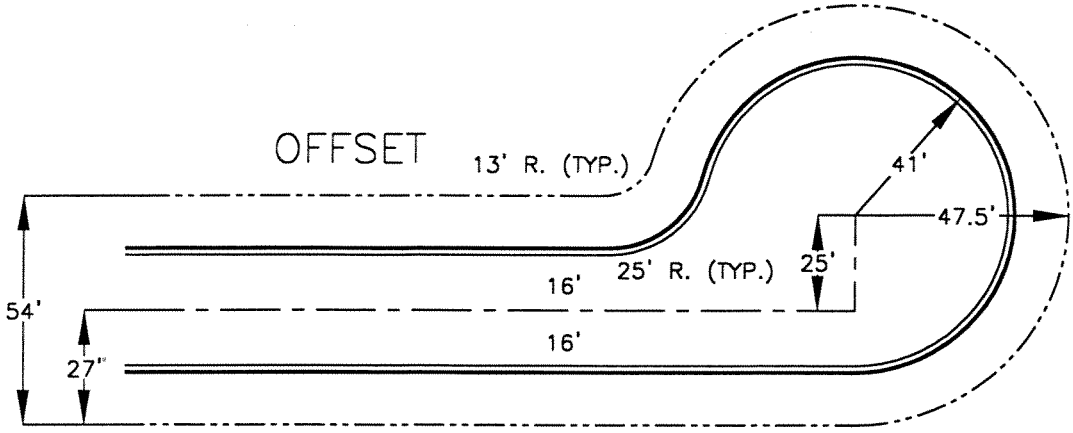

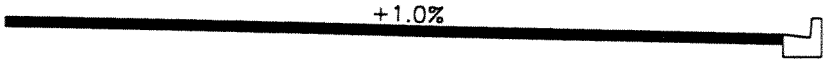

PROFILE
NTS

NOTES:
1. MINIMUM SLOPES
   .5% AT CURB AROUND BULB
   1.0% CROSS SLOPE TO CURB
2. TRANSITION FROM 2% TO 1% CROSS SLOPE IN FIRST QUARTER OF BULB IN OFFSET CUL-DE-SAC.

City of Newberg
414 E. FIRST STREET
NEWBERG, OREGON 97132

CUL-DE-SAC

SCALE: N.T.S.	
DATE:	JUNE 2000
APP. BY:	L. ANDERSON
STANDARD DRAWING	512

EXHIBIT "C" TO
RESOLUTION NO. 2011-2936

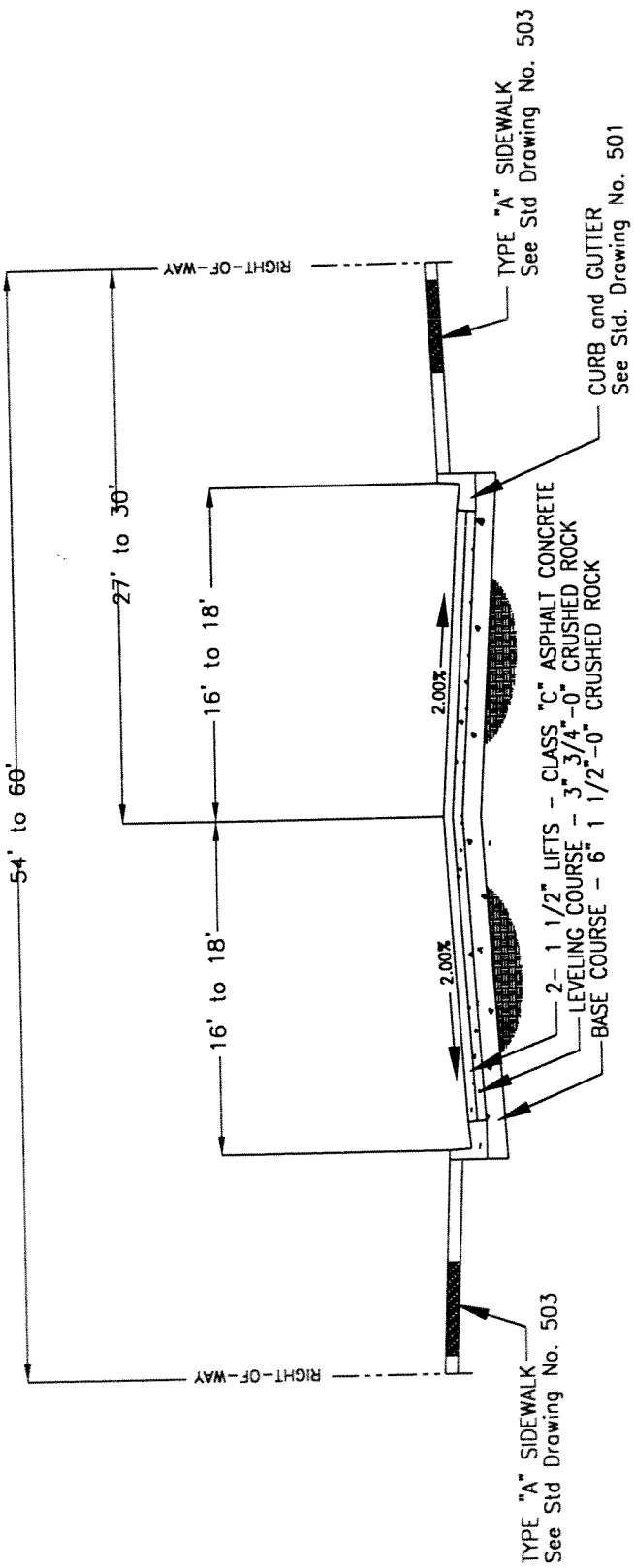

City of Newberg
414 E. FIRST STREET
NEWBERG, OREGON 97132

RESIDENTIAL STREET CROSS SECTION

SCALE: N.T.S.	
DATE:	JUNE 2000
APP. BY:	L. ANDERSON
STANDARD DRAWING	513

EXHIBIT "C" TO
RESOLUTION NO. 2011-2936

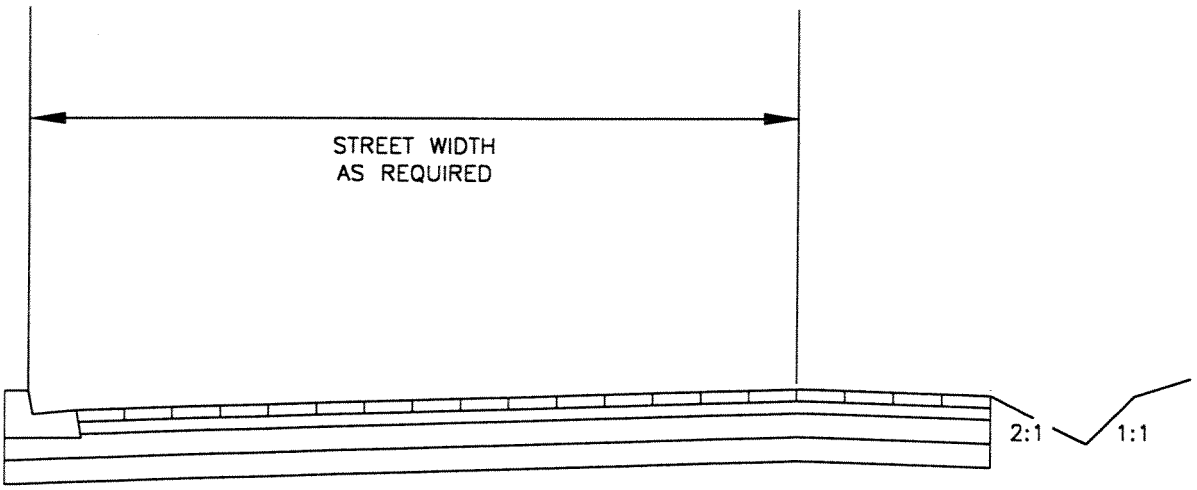

TABLE OF STREET WIDTHS

PLANNED STREET WIDTH	STREET WIDTH
32'	28'
34'	29'
36'	30'

City of Newberg
414 E. FIRST STREET
NEWBERG, OREGON 97132

INTERIM STREET

SCALE: N.T.S.
DATE: JUNE 2000
APP. BY: L. ANDERSON
STANDARD DRAWING 514

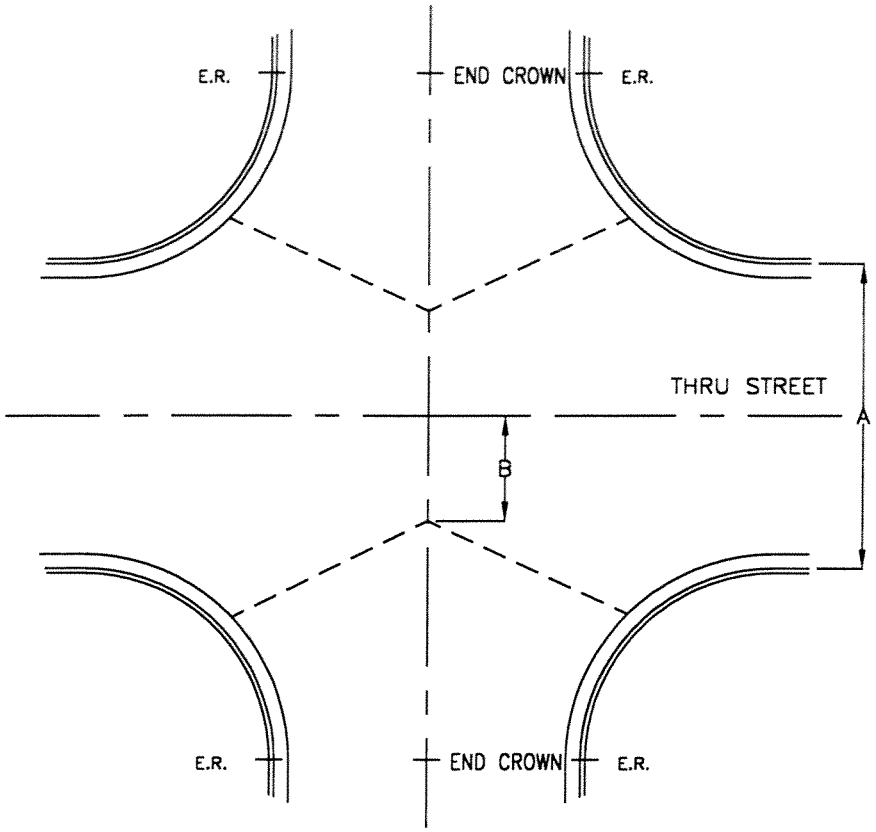

STREET WIDTH "A"	TRAFFIC LANE WIDTH "B"
32'	11'
34'	12'
36'	13'
40'	15'
46'	18'

NOTE:
THIS PAVING PATTERN NOT TO BE USED WHEN INTERSECTING GRADES ARE LESS THAN .50%.

City of Newberg
414 E. FIRST STREET
NEWBERG, OREGON 97132

INTERSECTION PAVING PLAN

SCALE: N.T.S.
DATE: JUNE 2000
APP. BY: L. ANDERSON
STANDARD DRAWING 515

EXHIBIT "C" TO
RESOLUTION NO. 2011-2936

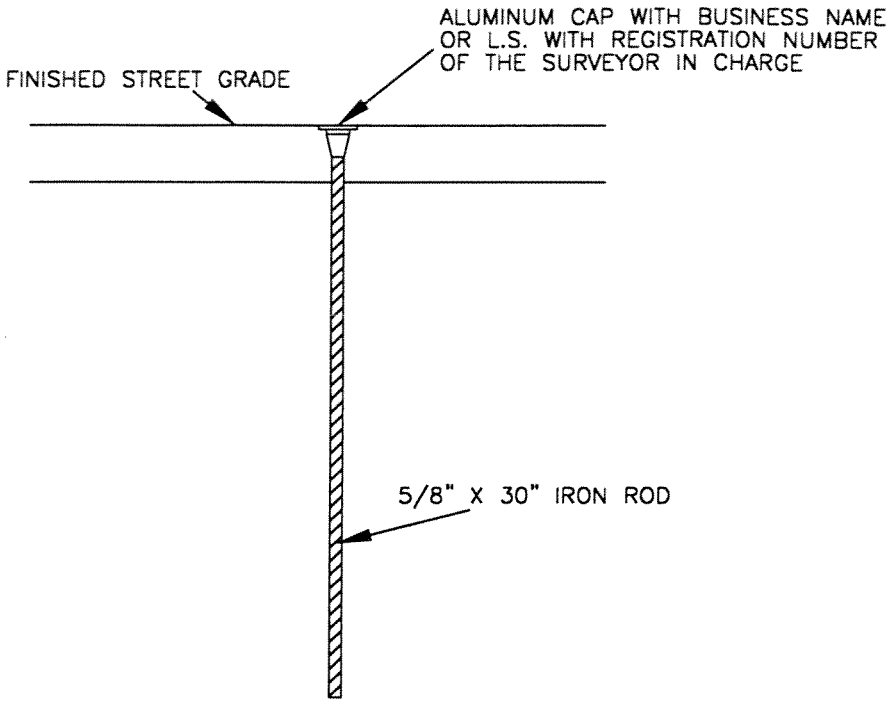

NOTES

1. MONUMENTS TO BE SET AT ALL STREET INTERSECTIONS, POINTS OF CURVATURE AND POINTS OF TANGENCY.

City of Newberg 414 E. FIRST STREET NEWBERG, OREGON 97132	STREET MONUMENTATION	SCALE: N.T.S. DATE: JUNE 2000 APP. BY: L. ANDERSON STANDARD DRAWING 516

EXHIBIT "C" TO
RESOLUTION NO. 2011-2936

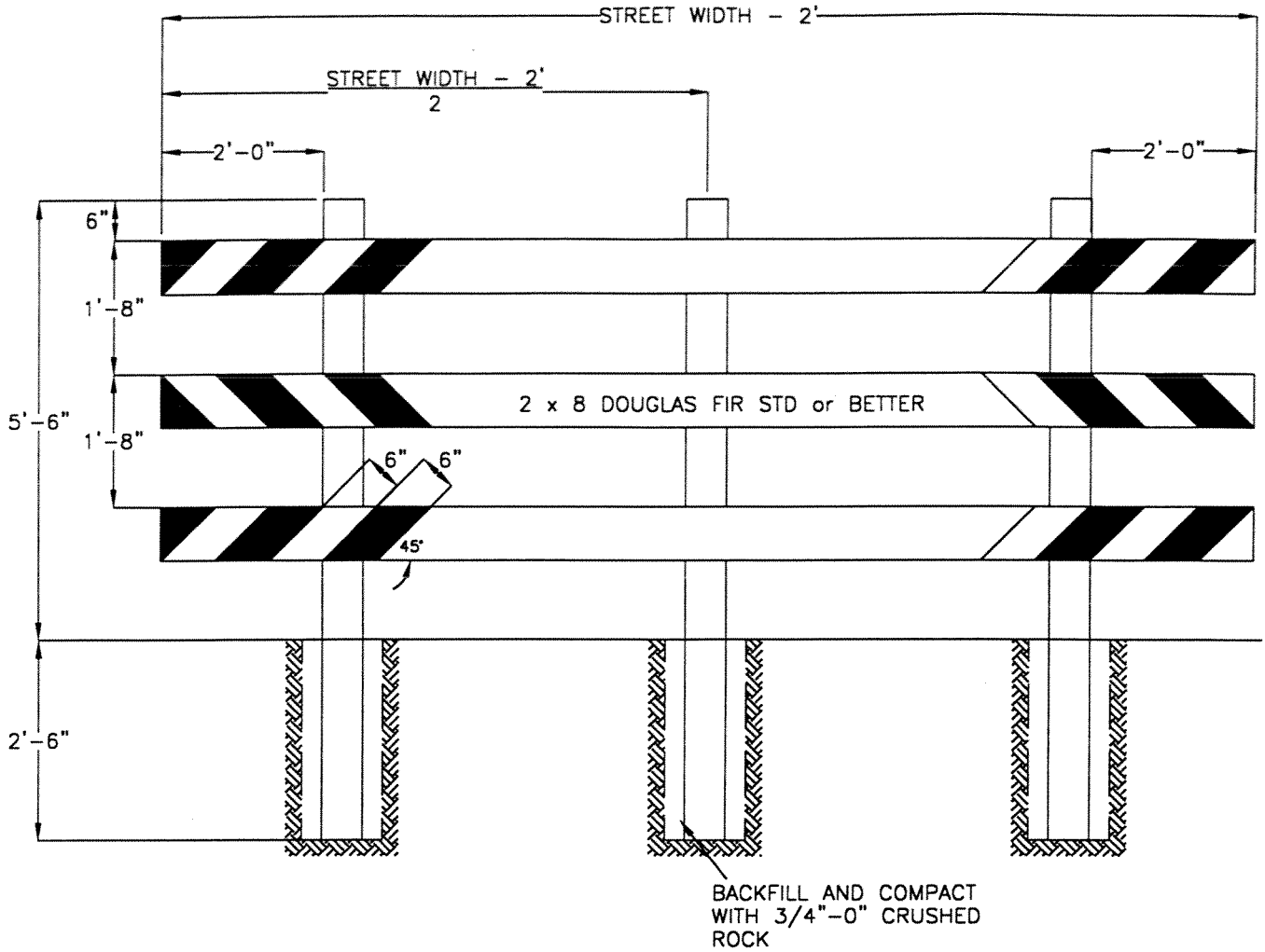

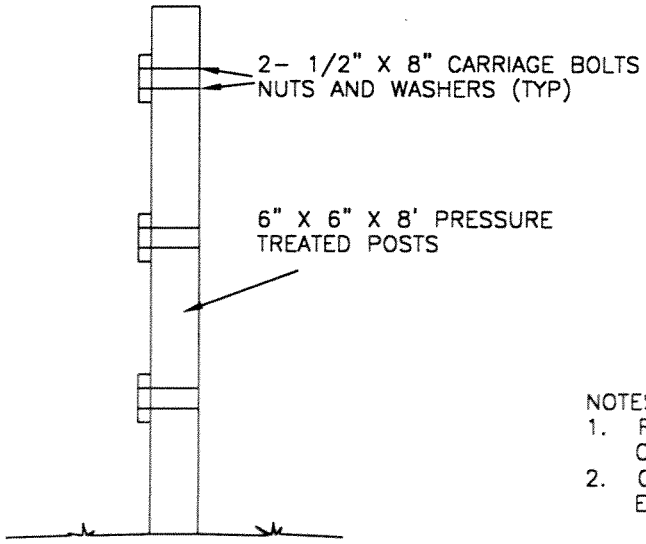

NOTES
1. RAILS TO BE PAINTED ALTERNATING REFLECTORIZED ORANGE AND WHITE.
2. ON STREETS WIDER THAN 36 FEET USE 4 POSTS EQUALLY SPACED.

City of Newberg
414 E. FIRST STREET
NEWBERG, OREGON 97132

STREET BARRICADE

SCALE: N.T.S.	
DATE:	JUNE 2000
APP. BY:	L. ANDERSON
STANDARD DRAWING	517

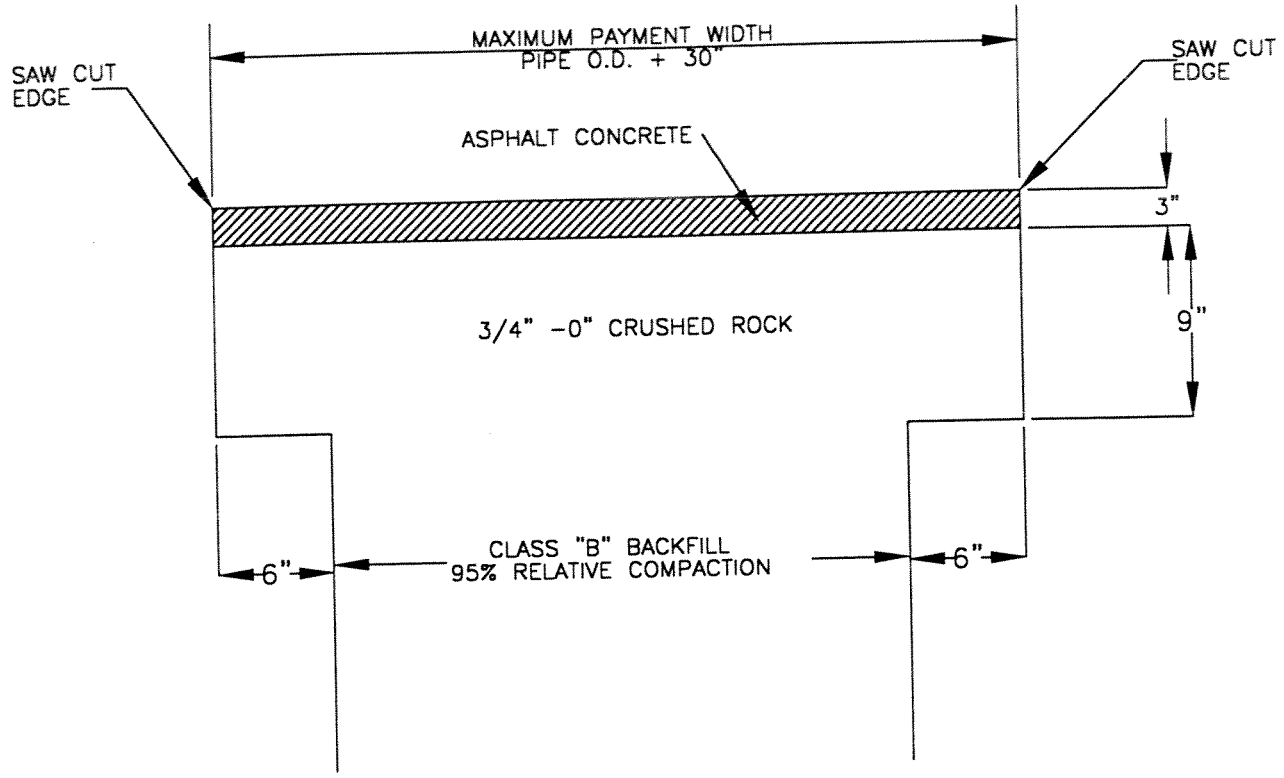

NOTES

1. SAW CUT ASPHALT TO NEAT STRAIGHT LINES.
2. ASPHALT – CLASS "C" MIX PLACED IN 2 LIFTS.
3. OIL AND SAND ALL JOINTS.
4. ACTUAL PAYMENT WIDTH TO BE DETERMINED AT SITE PRIOR TO PAVING.

City of Newberg
414 E. FIRST STREET
NEWBERG, OREGON 97132

TRENCH PAVING

SCALE: N.T.S.	
DATE:	JUNE 2000
APP. BY:	L. ANDERSON
STANDARD DRAWING	518

EXHIBIT "C" TO
RESOLUTION NO. 2011-2936

CONSTRUCTION SEQUENCE

STEP 1 COVER MANHOLE WITH BUILDING PAPER AND CONSTRUCT OVERLAY ACROSS EXISTING MANHOLES.
STEP 2 CUT RECTANGULAR EXCAVATION AROUND MANHOLE 12" MIN. FROM MANHOLE FRAME.
STEP 3 RAISE MANHOLE FRAME AND INSTALL CONCRETE RINGS AND SHIM TO FINISH PAVEMENT PROFILE AND CROSS SLOPE.
STEP 4 BACKFILL WITH EARLY STRENGTH CONCRETE AND ASPHALT CONCRETE TO DEPTHS AS DIRECTED.

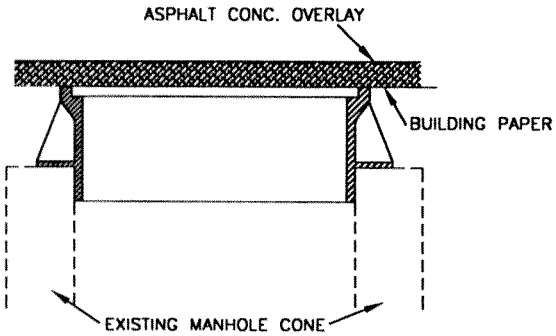

STEP 1

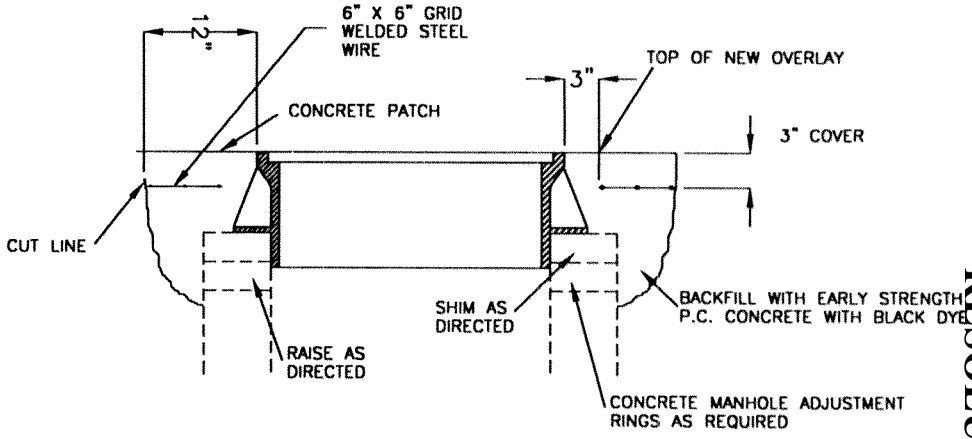

STEPS 2, 3 AND 4

NOTES:
1. SAWCUT A 6 FOOT SQUARE DIAMOND PATTERN EXCAVATION AROUND MANHOLE
2. APPLY CURING COMPOUND TO FINISHED CONCRETE
3. SEAL PAVING JOINT WITH APPROVED MATERIAL AND METHOD.

City of Newberg
414 E. FIRST STREET
NEWBERG, OREGON 97132

MANHOLE ADJUSTMENT

SCALE: N.T.S.
DATE: JUNE 2000
APP. BY: L. ANDERSON
STANDARD DRAWING 519

EXHIBIT "C" TO
RESOLUTION NO. 2011-2936

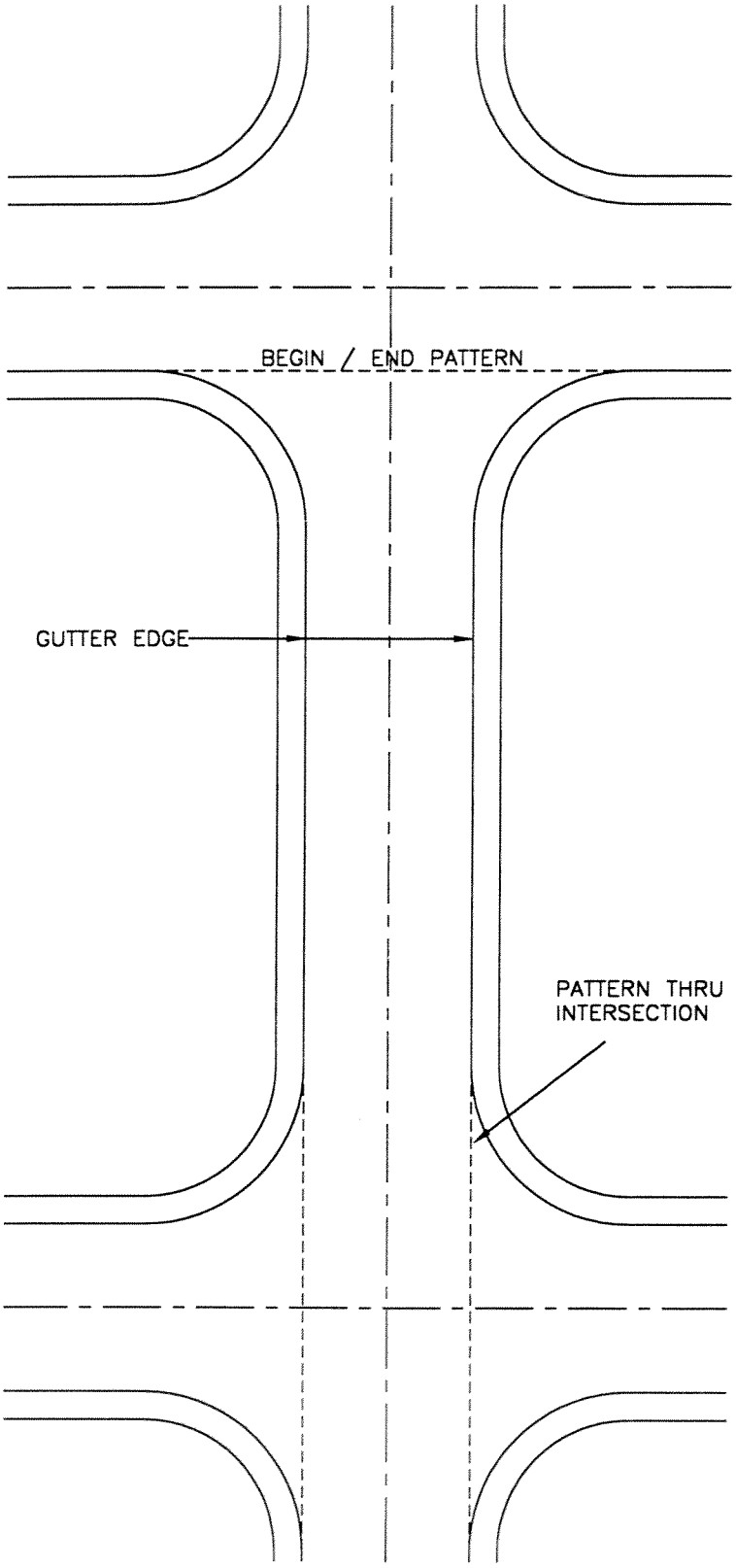

City of Newberg
414 E. FIRST STREET
NEWBERG, OREGON 97132

PAVEMENT SEAL COAT PATTERN

SCALE: N.T.S.	
DATE:	JUNE 2000
APP. BY:	L. ANDERSON
STANDARD DRAWING	520

EXHIBIT "C" TO
RESOLUTION NO. 2011-2936

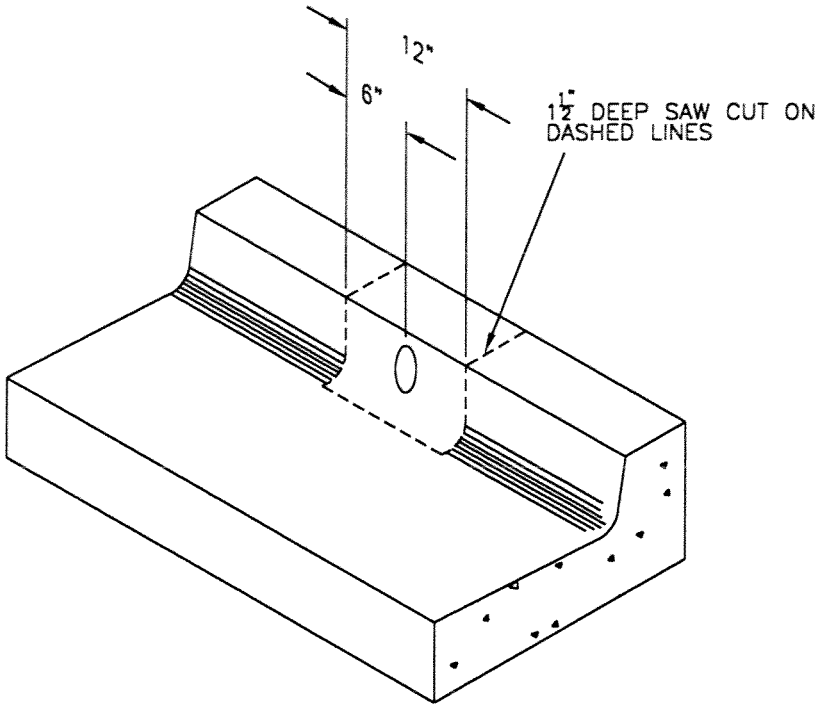

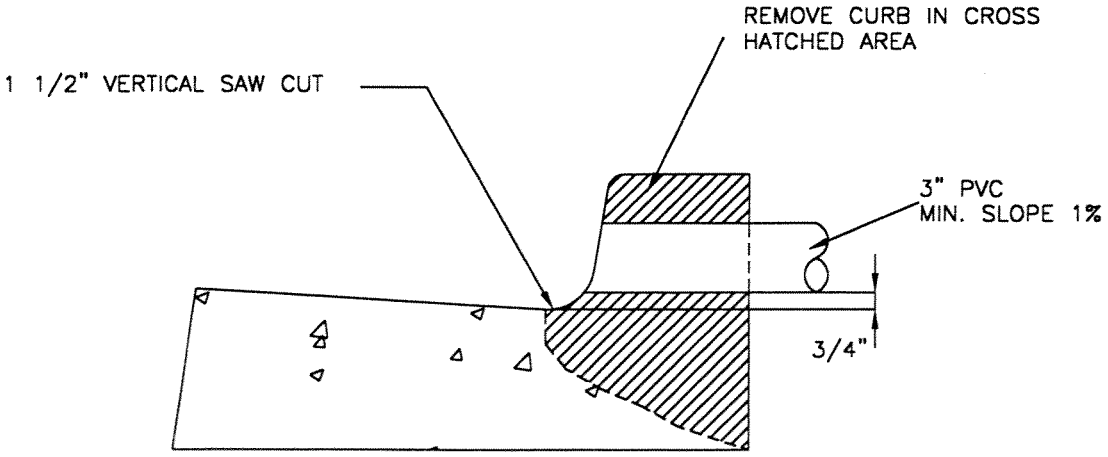

City of Newberg 414 E. FIRST STREET NEWBERG, OREGON 97132	RAIN DRAIN CURB CUT	SCALE: N.T.S. DATE: JUNE 2000 APP. BY: L. ANDERSON STANDARD DRAWING 521

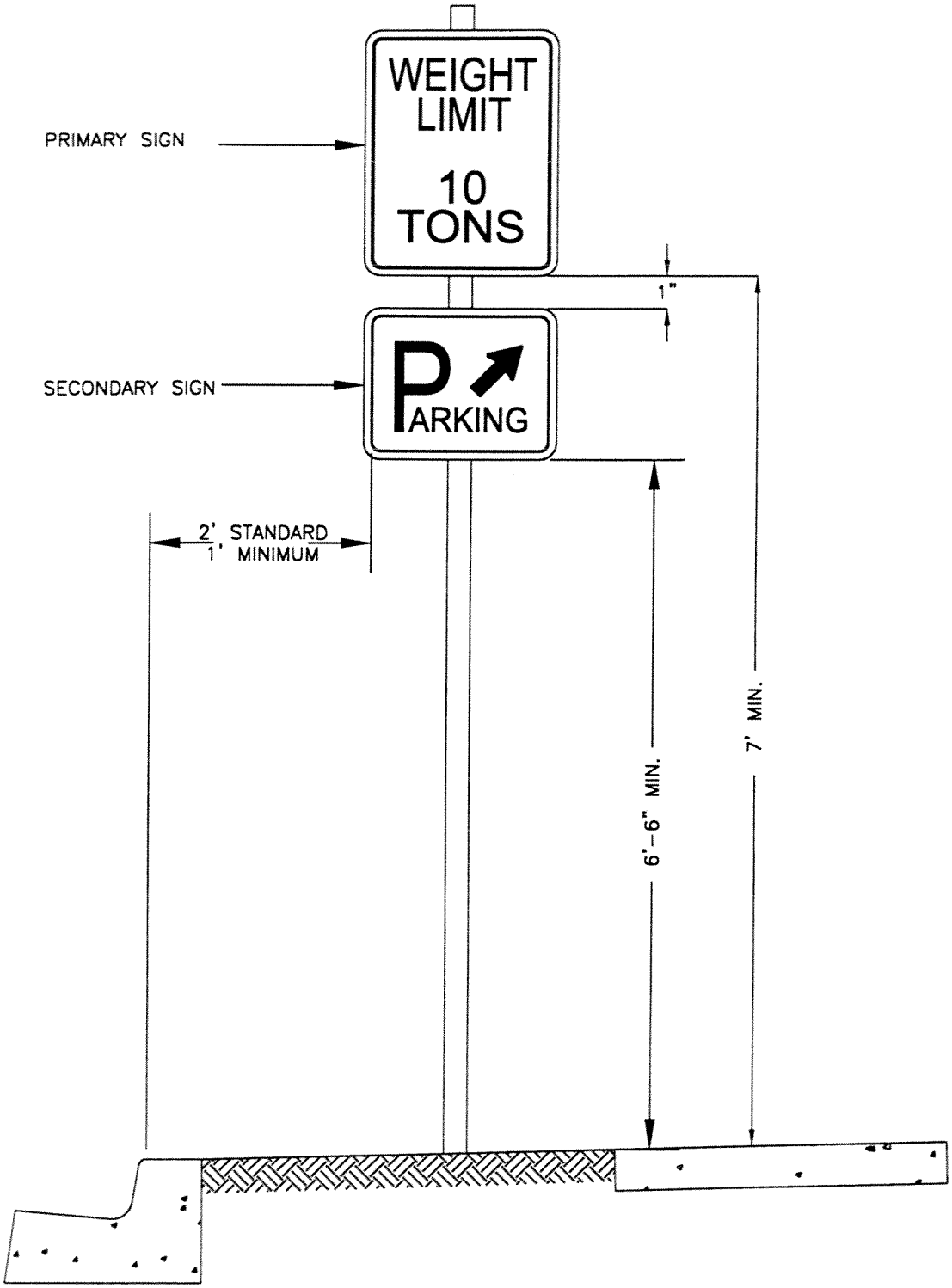

REFERENCE: MANUAL ON UNIFORM TRAFFIC CONTROL DEVICES
SECTION 2A-23, 24

City of Newberg
414 E. FIRST STREET
NEWBERG, OREGON 97132

SIGN CLEARANCES

SCALE: N.T.S.	
DATE:	JUNE 2000
APP. BY:	L. ANDERSON
STANDARD DRAWING	522

EXHIBIT "C" TO RESOLUTION NO. 2011-2936

NOTES:
1. LOCATION OF STREET LIGHT IS SHOWN ON STANDARD DRAWING NO. 104
2. STREET LIGHT HIGH PRESSURE SODIUM LUMINAIRE.

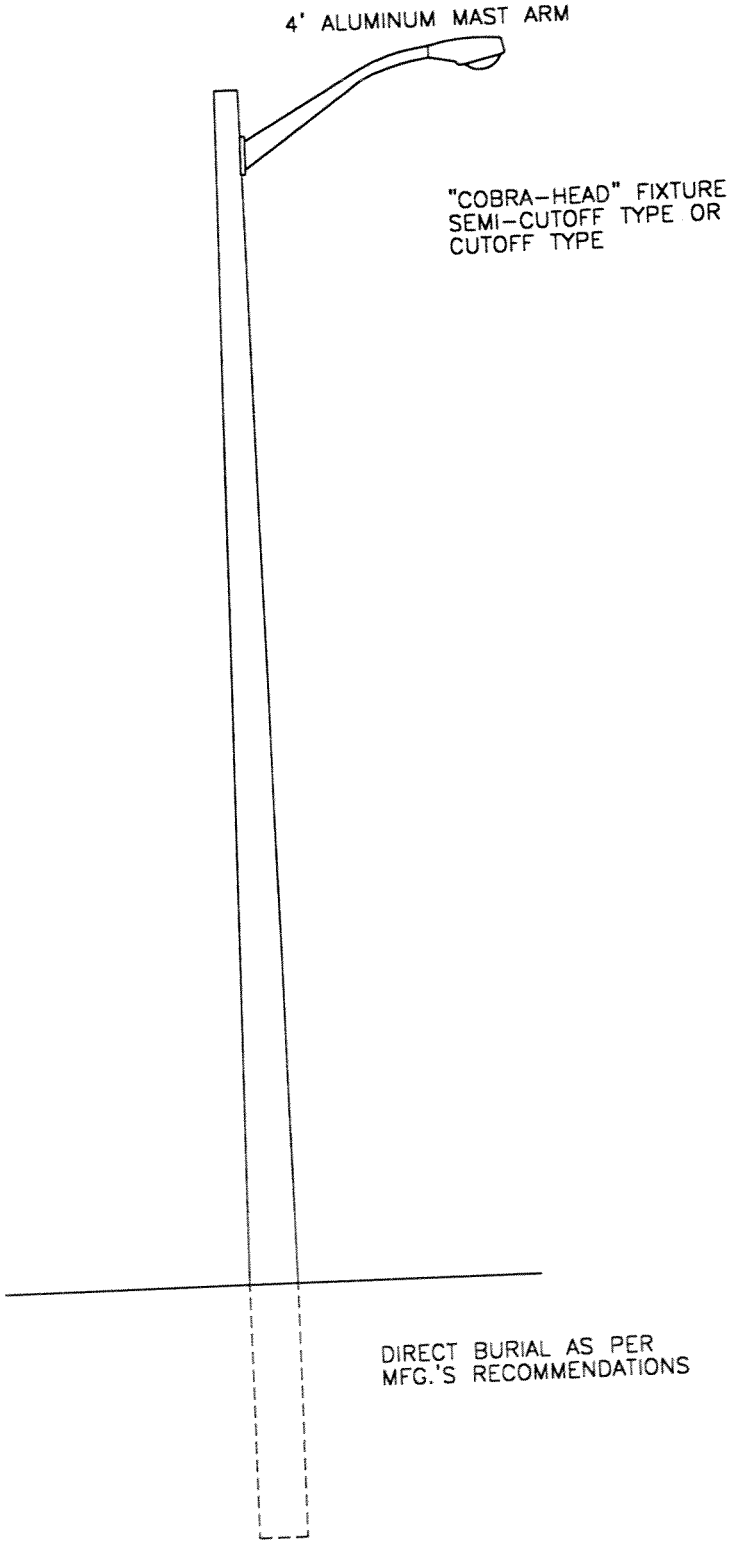

STREET WIDTH (ft.)	SERVICE TYPE	WATTAGE	LUMENS	POLE HT. (ft.)	ARM TYPE	VOLTAGE	SPACING (ft.)	TYPE
32'	RESIDENTIAL "A" SIDEWALK	100	9500	25	4' MAST	120	210	FIBERGLASS
34'	RESIDENTIAL "A" SIDEWALK	100	9500	25	4' MAST	120	210	FIBERGLASS
40'	COMMERCIAL COLLECTOR STREET	150	16000	30	6' MAST	240	155	FIBERGLASS
46'	COMMERCIAL ARTERIAL STREET	200	22000	30	6' MAST	240	180	FIBERGLASS

City of Newberg
414 E. FIRST STREET
NEWBERG, OREGON 97132

STREET LIGHT

SCALE: N.T.S.
DATE: JUNE 2000
APP. BY: L. ANDERSON
STANDARD DRAWING 523

EXHIBIT "C" TO RESOLUTION NO. 2011-2936

TYPE:
SN-4
FLAT DOUBLE FACED, .080 ALUMINUM
STREET NAME SIGN. TOTALLY REFLECTIVE
6" HIGH X NECESSARY LENGTH

BRACKETS:
VS-4 CAP FOR ROUND POSTS
VS-4 CROSS FOR SIGNS

COLOR:
WHITE ON GREEN WITH WHITE BORDER

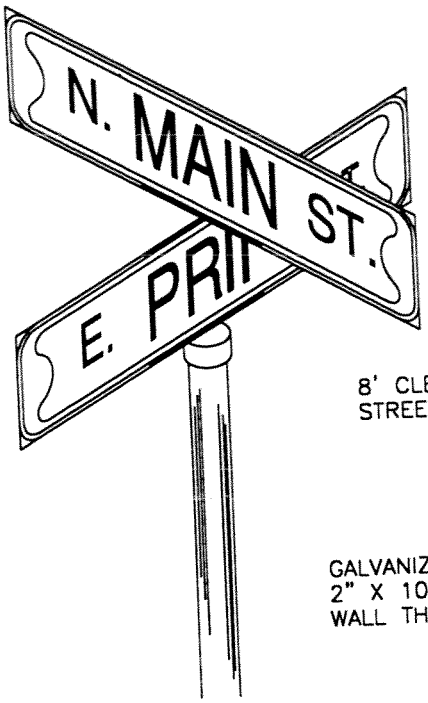

8' CLEARANCE FROM
STREET SIGN TO GRADE

GALVANIZED STEEL PIPE POST
2" X 10'-6" LENGTH
WALL THICKNESS .095"

SIGN DATA

STREET TYPE	BLADE SIZE	DIRECTION	NAME	DESIGNATION
LOCAL	6"	2"	4"	2"
COLLECTOR	9"	3"	6"	2"

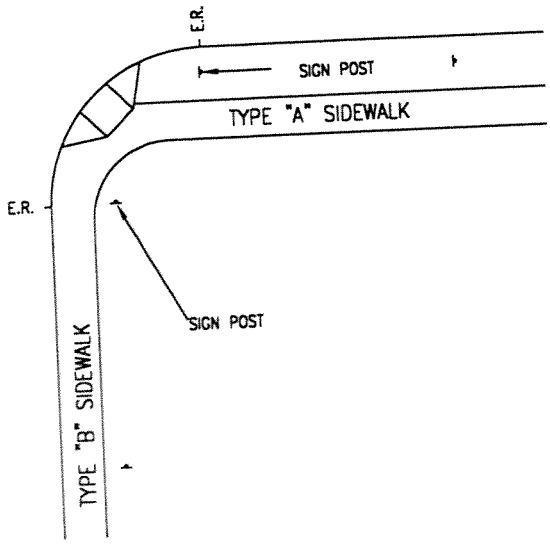

SIGN POST LOCATIONS

SIDEWALK	DISTANCE FROM FACE OF CURB	
	50' R.O.W.	60' R.O.W.
TYPE "A"	2'	4'
TYPE "B"	7'	7'

NOTE:
LOCATE POSTS SO THAT TRAFFIC CONTROL SIGNS
CAN BE PLACED ON THE SAME POST.

City of Newberg
414 E. FIRST STREET
NEWBERG, OREGON 97132

STREET SIGN AND
POST LOCATION

SCALE: N.T.S.
DATE: JUNE 2000
APP. BY: L. ANDERSO
STANDARD DRAWING 524

EXHIBIT "C" TO
RESOLUTION NO. 2011-2936

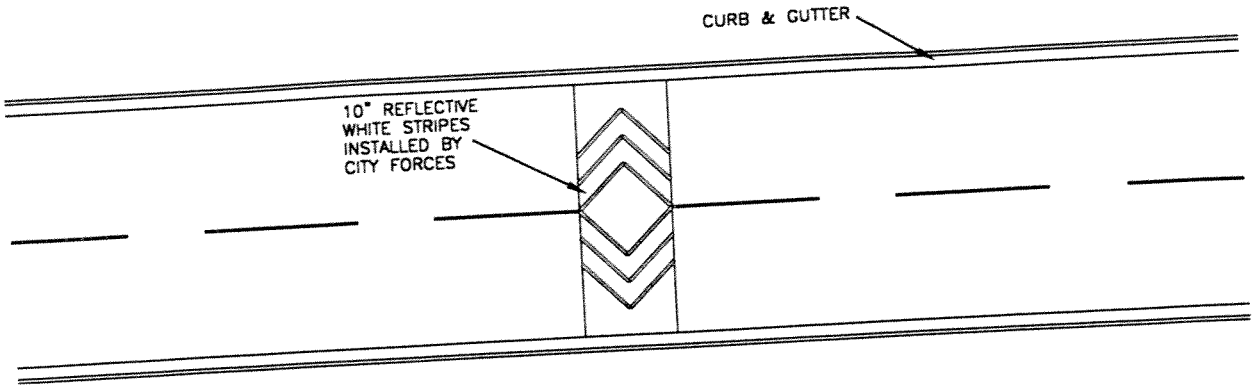

Direction of Traffic

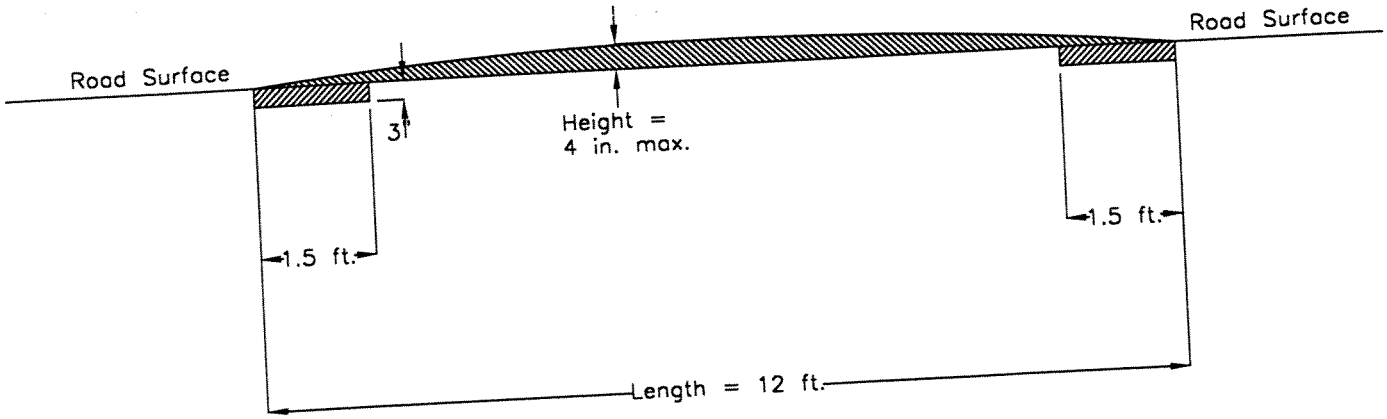

CROSS SECTION AND HUMP DIMENSIONS

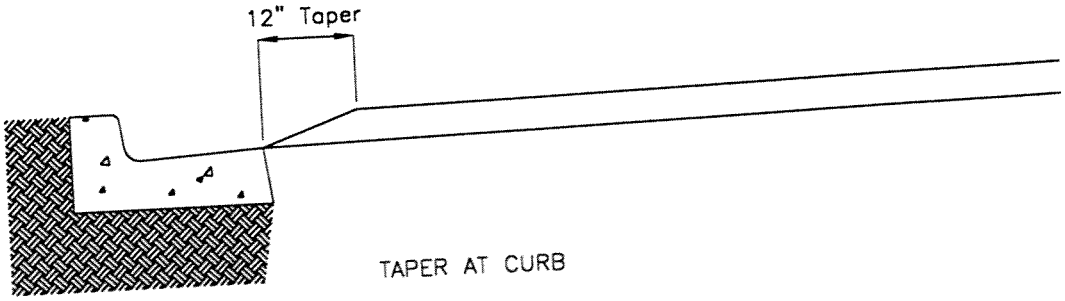

TAPER AT CURB

City of Newberg
414 E. FIRST STREET
NEWBERG, OREGON 97132

STREET HUMP

SCALE: N.T.S.	
DATE:	JUNE 2000
APP. BY:	L. ANDERSON
STANDARD DRAWING	525

EXHIBIT "C" TO
RESOLUTION NO. 2011-2936

GEOTEXTILE SPECIFICATIONS

PROPERTY	TEST	MIN. VALUE
TENSILE STRENGTH, lbs	ASTM D-4632	80
ELONGATION, %	ASTM D-4632	50
ASPHALT RETENTION, gal/sy	OSHD TM-817	0.20
MELTING POINT, °F	ASTM D-276	300

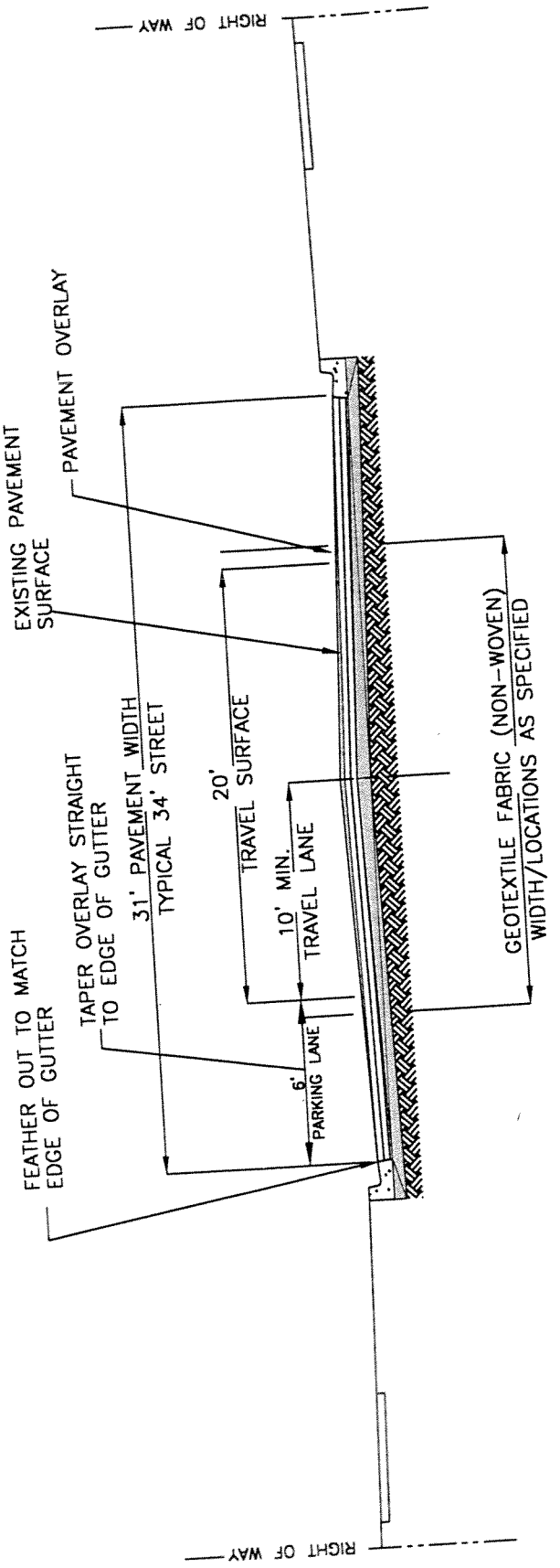

NOTES
1. OVERLAY PATTERN FOR DIFFERENT WIDTH STREETS WILL BE SIMILAR.
2. OFFSET PAVING PANELS 12" MIN. FROM JOINTS OF EXISTING PAVEMENT.

City of Newberg
414 E. FIRST STREET
NEWBERG, OREGON 97132

ASPHALT OVERLAY
TYPICAL SECTION

SCALE: N.T.S.
DATE: JUNE 2000
APP. BY: L. ANDERSON
STANDARD DRAWING 526

EXHIBIT "C" TO
RESOLUTION NO. 2011-2936

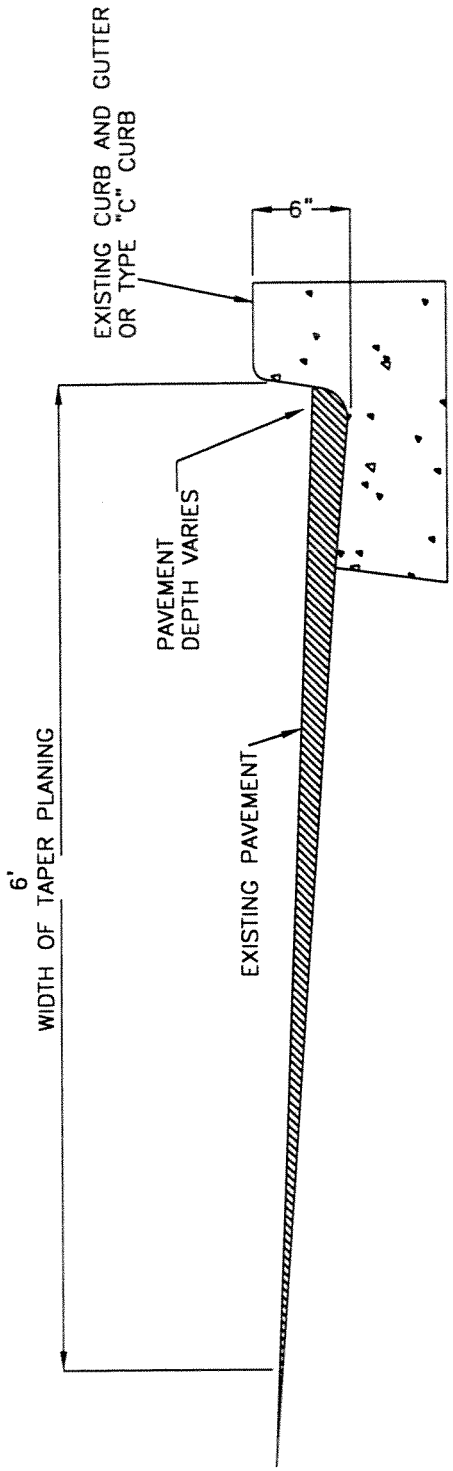

NOTES
1. PLANE FLUSH TO CURB FACE.
2. PLANE TO SURFACE OF CONCRETE GUTTER OR TO 6" EXPOSURE OF TYPE "C" CURB.

City of Newberg
414 E. FIRST STREET
NEWBERG, OREGON 97132

PAVEMENT MILLING

SCALE: N.T.S.	
DATE:	JUNE 2000
APP. BY:	L. ANDERSON
STANDARD DRAWING	527

EXHIBIT "C" TO
RESOLUTION NO. 2011-2936

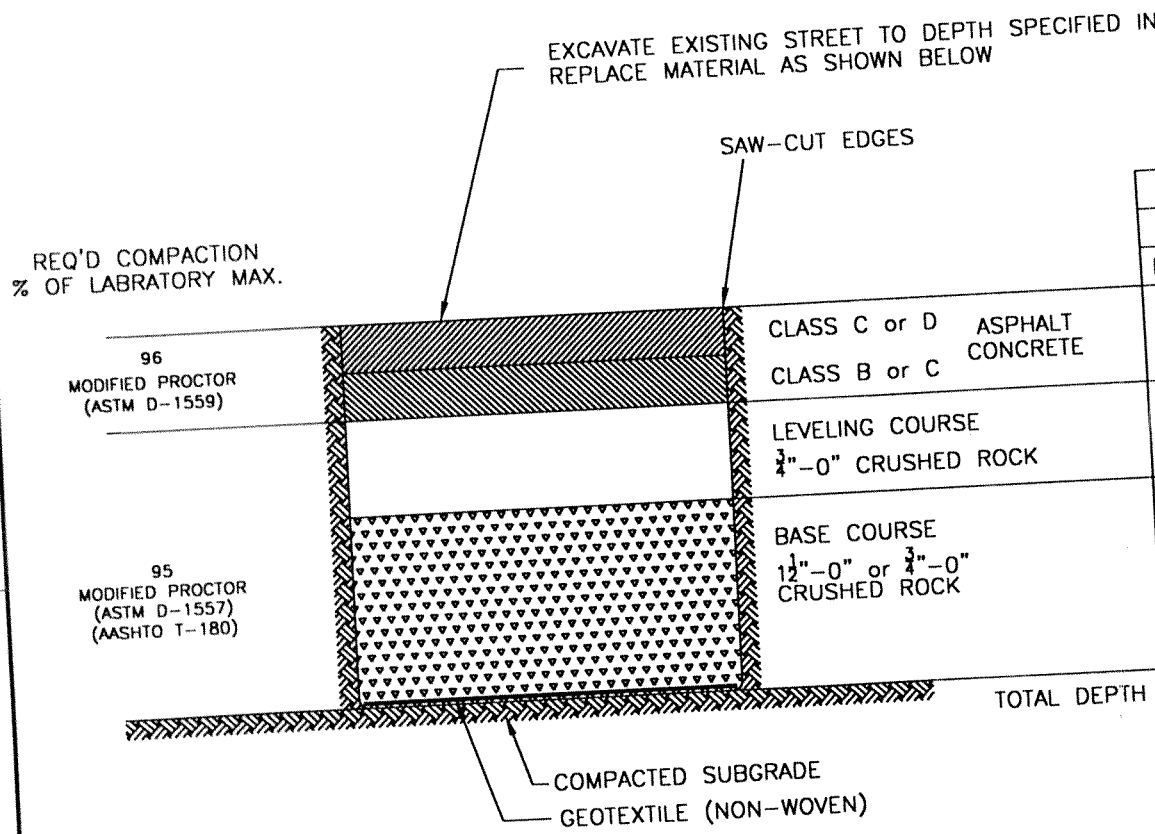

	STREET TYPE					
	LOCAL		COLLECTOR		ARTERIAL	
	DEPTH	LIFTS	DEPTH	LIFTS	DEPTH	LIFTS
CLASS C or D / CLASS B or C ASPHALT CONCRETE	3"	2	4"	2	6"	3
LEVELING COURSE 3/4"-0" CRUSHED ROCK	3"	1	3"	1	3"	1
BASE COURSE 1 1/2"-0" or 3/4"-0" CRUSHED ROCK	6"	1	9"	2	12"	2
TOTAL DEPTH	12"		16"		21"	

GEOTEXTILE SPECIFICATIONS

PROPERTY	TEST	MIN. VALUE
TENSILE STRENGTH, lbs	ASTM D-4632	120
ELONGATION, WET %	ASTM D-4632	40
COEFFICIENT OF WATER PERMEABILITY, cm/sec	ASTM D-4491	0.10
PUNCTURE STRENGTH, lbs	ASTM D-4833	80
MULLEN BURST STRENGTH, psi	ASTM D-3786	250

City of Newberg
414 E. FIRST STREET
NEWBERG, OREGON 97132

ASPHALT PAVEMENT REPAIR

SCALE: N.T.S.
DATE: JUNE 2000
APP. BY: L. ANDERSON
STANDARD DRAWING 528

EXHIBIT "C" TO
RESOLUTION NO. 2011-2936

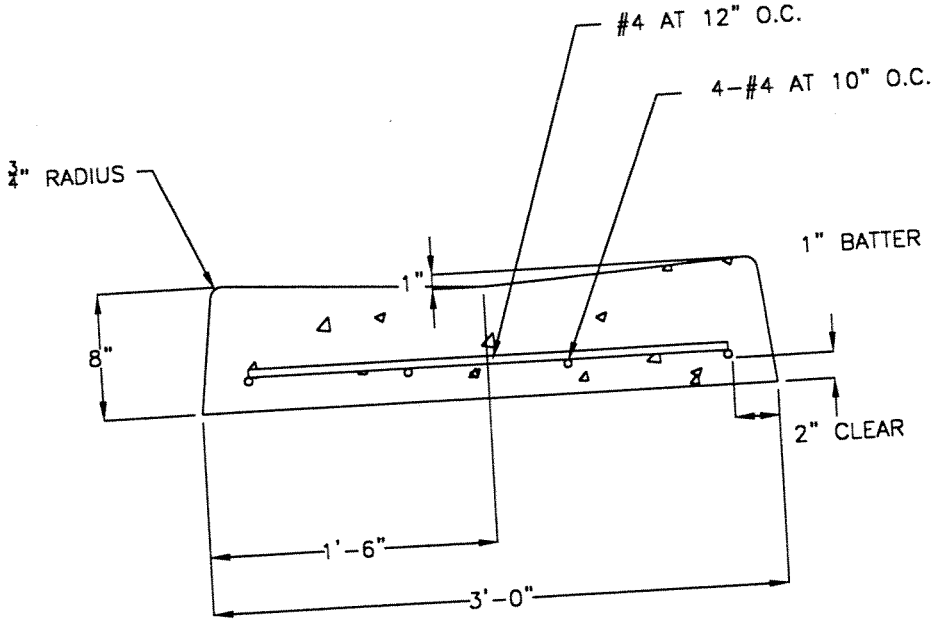

NOTES
1. CONCRETE MIX: 4,000 PSI AT 28 DAYS WITH 6% ENTRAINED AIR.

City of Newberg
414 E. FIRST STREET
NEWBERG, OREGON 97132

VALLEY GUTTER

SCALE: N.T.S.	
DATE:	JUNE 2000
APP. BY:	L. ANDERSON
STANDARD DRAWING	529

City of Newberg

CITY OF NEWBERG
MANHOLE VACUUM TEST NOMOGRAPH

PROJECT NAME: _____

TEST DATE: _____

TEST CONDUCTED BY: _____

MANHOLE	DEPTH	DIAMETER	TEST TIME	PASS	FAIL

NOTES: _____

INSPECTOR: _____

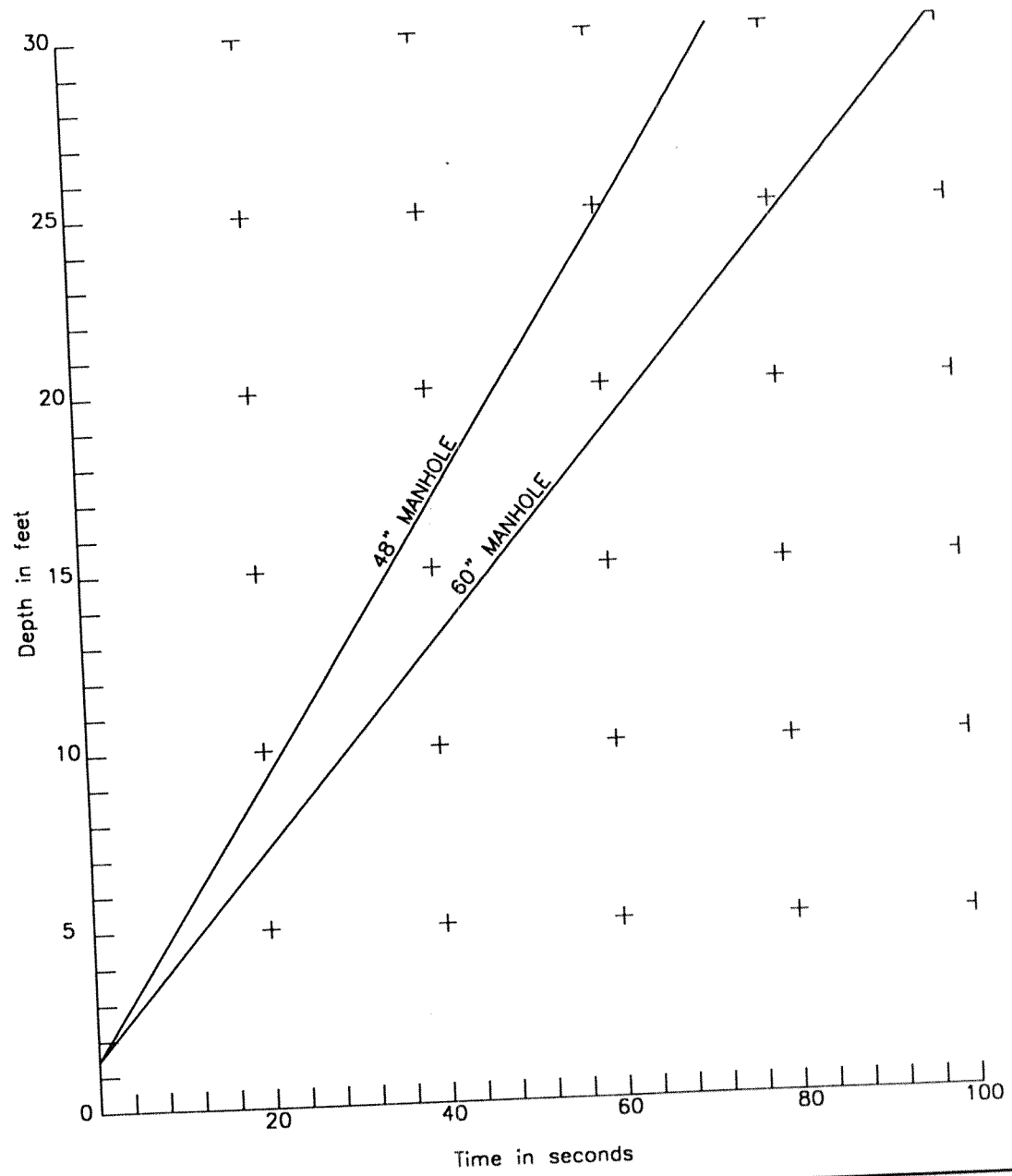

EXHIBIT "C" TO
RESOLUTION NO. 2011-2936

CITY OF NEWBERG
SANITARY SEWER AIR TEST NOMOGRAPH

LOCATION: _____

TEST DATE: _____

TEST CONDUCTED BY: _____

TEST SECTION: FROM _____ TO _____

DIAMETER (d)	LENGTH (L)	K = 0.011d²L	C=0.0003882 d L
	TOTALS		

(tq) TIME REQUIRED IN SECONDS _____

LOSS IN OUNCES _____

☐ ACCEPTED

☐ NOT ACCEPTED

NOTES: _____

INSPECTOR: _____

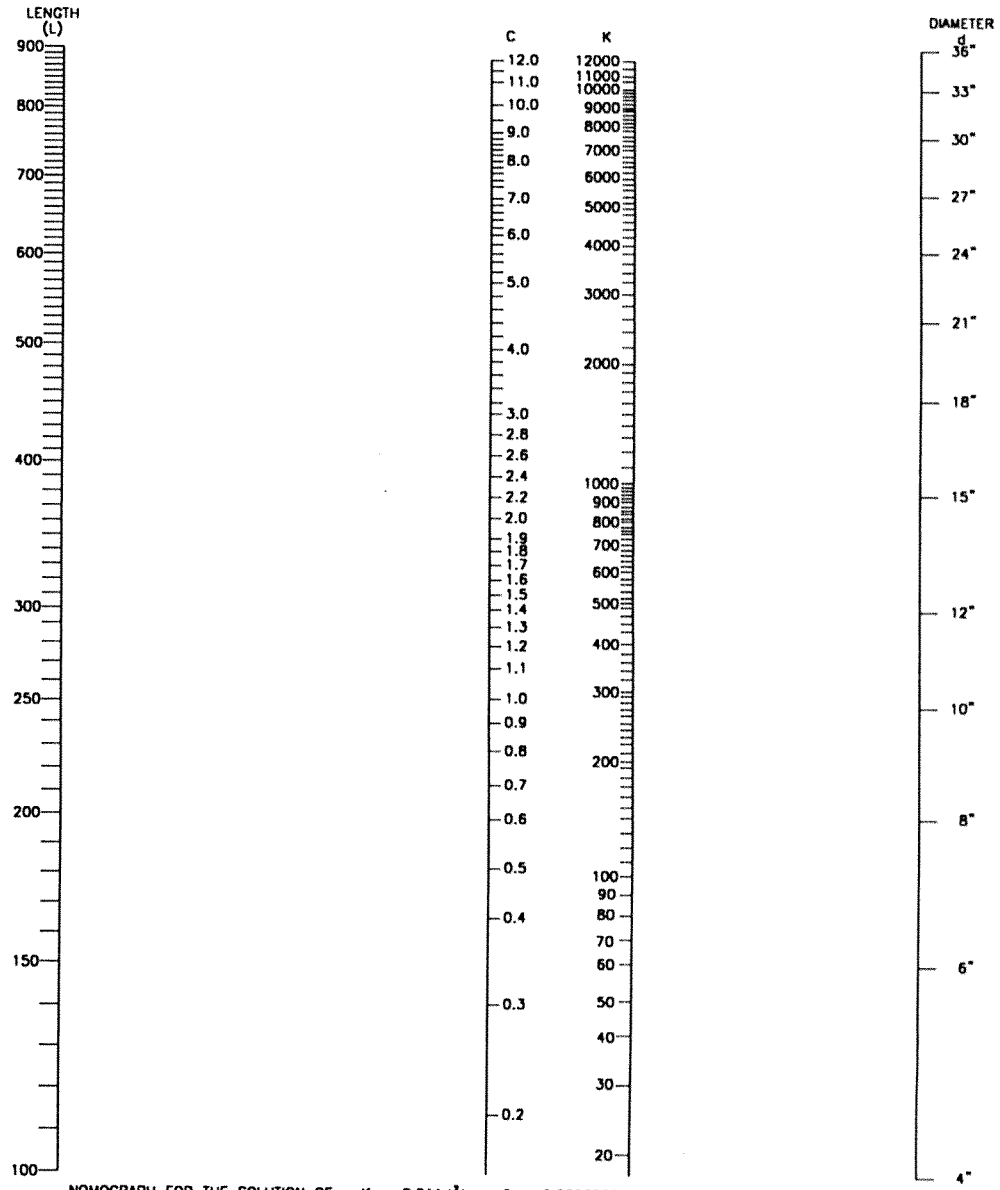

NOMOGRAPH FOR THE SOLUTION OF $K = 0.011d^2L$, $C = 0.0003882\ dL$, $tq = K/C$

EXHIBIT "C" TO
RESOLUTION NO. 2011-2936