City of Newberg TMDL Implementation Plan

Annual Report Covering 2019 Activities

Submitted: March 12, 2020

Table of Contents

Tables

ACRONYMS

ACWA - Association of Clean Water Agencies

ASCE - American Society of Civil Engineers

AWWA - American Water Works Association

BMP - Best Management Practice

CESCL - Certified Sediment and Erosion Control Lead

CRRC - Citizen's Rate Review Committee

City - City municipal staff of Newberg, Oregon

DEQ - Oregon Department of Environmental Quality

ESC - Erosion and Sediment Control

EWRI - Environmental and Water Resources Institute

FOG - Fats, Oil, and Grease

GIS – Geographic Information System

GFU - George Fox University

GYWC - Greater Yamhill Watershed Council

IDDE - Illicit Discharge Detection and Elimination

MS4 – Municipal Separate Stormwater Sewer System

NORP - Northwest Oregon Restoration Partnership

NPDES – National Pollutant Discharge Elimination System

O&M- Operations and Maintenance

PW - Public Works

TMDL - Total Maximum Daily Load

YCSW - Yamhill County Solid Waste

Executive Summary

The City of Newberg entered its second year of the 2018-2022 Total Maximum Daily Load (TMDL) cycle in January 2019, which covers TMDL activities completed in calendar year 2019. The 2018-2022 TMDL Matrix can be seen in Appendix A. The matrix consists of the following seven focus areas:

- Public Education
- Public Involvement
- Illicit Discharge Detection and Elimination (IDDE)
- Construction Site Stormwater Runoff Control
- Post-Construction Runoff Control
- Pollution Prevention in Municipal Operations
- Temperature

The first six focus areas are generally aligned with typical MS4 NPDES requirements, and the seventh focus area addresses stream temperature. Each area of focus has associated best management practices, strategies, and measurable goals. This 2019 annual report documents progress made toward achieving the measurable goals.

The TMDL Matrix which can be found in Appendix A has all of the best management practices, strategies, and measurable goals and each measurable goal has an associated 2019 status. The following status options and definitions can be seen below:

- "**Completed**" is used as a status update when a particular measurable goal has been completed and there are no ongoing activities associated with the measurable goal
- "**Ongoing**" is used as a status update when a particular measurable goal has been completed each year via continuing ongoing activities
- "**Incomplete, But Started**" is used as a status update when progress has been made on a measurable goal, but it has not yet moved into a "completed" or "ongoing" status
- "**Not Started**" is used as a status update when no work for a measurable goal has been started
- "**Delayed**" is used as a status update when a measurable goal hasn't been completed, and some but very minimal progress has been made on the goal. This may in some instances be related to available staffing or other resources

2019 TMDL Matrix Summary

The City has a total of 54 measurable goals identified in the TMDL Matrix. At the end of 2019 the status for those goals is as follows: Complete (2), Ongoing (44), Incomplete, But Started (3), Not Started (5), and Delayed (0). Details about each measurable goal can be found throughout the document.

Measure No. 1 – Public Education

The Public Education measure has two best management practices which include Stormwater Education and Watershed Education, which are comprised of five (5) strategies and seven (7) measurable goals which are listed below and a status summary can be found in Appendix A:

Best Management Practice	Strategy	Measureable Goal	Performance Measure
Measure No. 1 – Public Education			
PE-1 Stormwater Education	Website Education	Provide stormwater information on the City's website.	Provide general stormwater information and website links to the annual TMDL Implementation Plan.
	Citizen Group Education	Present stormwater information to interested citizen groups at local venues.	Track number of presentations, presentation messages, and number of participants (if available).
	Water Quality Report	Provide stormwater education in the City's annual Water Quality Report.	Provide website links to the annual Water Quality Report, and track stormwater messages included in the report.
PE-2 Watershed Education	Public Signage	Develop public infrastructure signage program.	Develop public infrastructure signage program to determine sign locations and messaging.
		Provide signage at stream crossings or LIDA infrastructure facilities.	Track number of signs installed and associated messages.
		Mark 50 unmarked catch basins a year with "No Dumping, Drains to Stream" type language.	Track number of catch basins marked per year. Prepare GIS map showing coverage of locations that are permanently marked or marked with after-market plastic labels.
	Student Education	Provide watershed education to students.	Track number of presentations, presentation messages, and number of participants (if available).

2019 TMDL Activities Completed

Activities completed in 2019 for each measurable goal are described below.

PE-1 Stormwater Education (Ongoing)

The Stormwater Education best management practice consists of three strategies; Website Education, Citizen Group Education, and the Water Quality Report.

Website Education (Ongoing)

The City has 16 web pages related to stormwater covering information on erosion and sedimentation control, riparian vegetation, water quality, illicit discharge, public works standards, and the Total Maximum Daily Load (TMDL) program.

The City posted on social media via the City of Newberg and Public Works Department Facebook pages 35 times about stormwater activities including the catch basin cleaning, illicit discharge, compost, waste management hazardous materials collections, the drug takeback program, native plant sales, the rate review committee, and volunteer events.

The annual TMDL report is uploaded each year to the City's website after receiving and incorporating comments from DEQ.

Citizen Group Education (Ongoing)

Leadership Newberg attended a presentation at the Newberg Wastewater Treatment Plant in 2019 to learn about City programs such as volunteer opportunities, the Trees for Streams program, the watershed grant, the fats, oils, and grease (FOG) program, and City created Class A compost. Participants were also given a tour of the waste water treatment plant and its composting facilities.

In June 2019, the City held the annual Public Works Day event in the park across from the Chehalem Cultural Center. The Engineering Department provided water conveyance education as part of the event by building a water system out of clear tubing and giving kids the opportunity to see how impacts to the system like "clogging" a line with toothpicks or small balls can cause backups and flooding. The activity was very interactive with kids creating blockages and then pouring water down the tubing to see what happened. See Figure 1 for water conveyance system activity.

Figure 1: Public Works Day Water System Conveyance Activity

Water Quality Report (Ongoing)

The Environmental Protection Agency (EPA) and the State of Oregon require the City of Newberg to distribute a Water Quality Report each year to all residences/customers. The majority of information in the report is required by the EPA and the report is mailed to residents/customers by June 30th each year. The 2018 Water Quality Report was mailed out in June 2019 and can be found on the City's website here: https://www.newbergoregon.gov/operations/page/water-quality-report

The report included the following TMDL related messages:

- Watershed Volunteer opportunities (PE-1 Citizen Group Education)
- City's Watershed Grant (PI-2 Public Participation in Stormwater Management)
- Illicit Discharge (Measure No. 3 – Illicit Discharge Detection and Elimination)
- Citizen Rate Review Committee (PI-1 Stormwater Utility Fee)
- Hazardous Waste Collection resources (ID-3 Hazardous Waste Collection)

PE-2 Watershed Education (Ongoing/Not Started)

The Watershed Education best management practice consists of two strategies; Public Signage and Student Education.

Public Signage (Ongoing/Not Started)

The Public Signage strategy consists of three measureable goals.

Develop a Public Infrastructure Signage Program (Not Started)

This work has not yet been started, the expected implementation timeline is December 2020.

Provide Signage at Stream Crossings or LIDA Infrastructure Facilities (Not Started)

This work has not yet been started, the expected implementation timeline is December 2022.

Marking 50 Unmarked Catch Basins a Year with "No Dumping, Drains to Stream" Language (Ongoing)

The City installed 83 bi-lingual "No Dumping, Drains to Creek" catch basin markers in November 2019. This year catch basins in The Greens neighborhood near the Chehalem Glenn Golf Course on the eastern edge of the City were marked.

The City fully implemented the Cartegraph OMS asset management system in 2019. Figure 2 shows a screen capture from Cartegraph OMS showing the location of the "No Dumping, Drains to Creek" markers installed in 2019. The green lines represent the stormwater conveyance system, the purple circles represent storm inlets marked with "No Dumping, Drains to Creek," and the red circles represent storm inlets not yet marked. Being able to track where catch basins have been marked around the City will help us to better target high risk areas and work to get full coverage across Newberg.

Figure 2: "No Dumping, Drains to Creek" markers installed in 2019

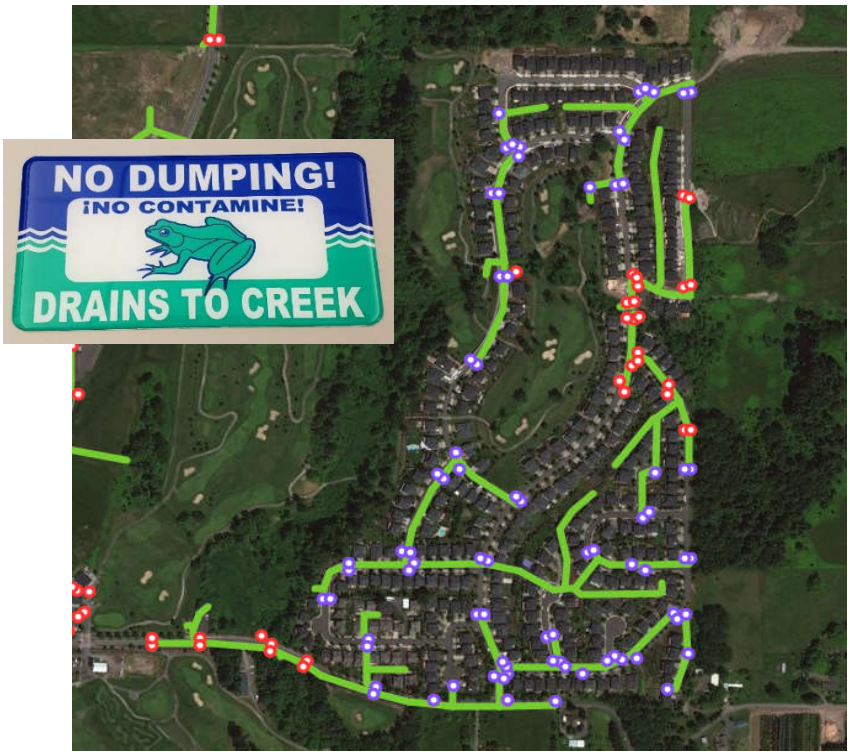

Student Education (Ongoing)

The City of Newberg has been working with a student led organization called Chehalem Valley Watershed Project (CVWP), which is comprised of students from Newberg High School.[1] The focus of this organization is to encourage high school students to learn about the environment through hands-on research, restoration work, and outreach events. The CVWP held a Chehalem Watershed Symposium event on Thursday April 18, 2019. The City of Newberg hosted a table at the event with a poster board focused on stream ordering, the City's street sweeping program, and provided general information about catch basins and manholes with a focus on the "No Dumping! Drains to Creek" educational messaging.

2019 Adaptive Management

The City of Newberg is not proposing to modify any measurable goals through adaptive management.

Looking Ahead - 2020 Activities

Under Measure No. 1, there is one measurable goal with a completion date in 2020. The City is scheduled to develop a public stormwater infrastructure signage program by December 2020.

The remaining five of the seven measureable goals have a status of "ongoing" which means progress is made toward the goal each year via recurring activities.

[1] Chehalem Valley Watershed Project https://sites.google.com/view/cvwp/home

Measure No. 2 – Public Involvement

The Public Involvement measure has four best management practices which include reviewing the Stormwater Utility Fee, Public Participation in Stormwater Management, Public Participation in Reporting Stormwater Issues, and Public Participation in Educational Focus. These four best management practices are comprised of four (4) strategies and five (5) measurable goals which are listed below and a status summary can be found in Appendix A:

Best Management Practice	Strategy	Measureable Goal	Performance Measure
Measure No. 2 – Public Involvement			
PI-1 Stormwater Utility Fee	Participate in Citizen Rate Review Committee (CRRC) Meetings	Present stormwater funding needs to CRRC.	Document meeting attendance, adopted rates, and effective dates of rate changes.
PI-2 Public Participation in Stormwater Management	Provide Grant Funding for Water Quality Improvement or Watershed Awareness Projects	Provide a minimum of $2,000 in a grant program to fund non-profit projects that fulfill goals of the TMDL plan.	Track number of funded projects, amount disbursed per project, stream affected, and either the number of stream miles affected or the number of participants.
PI-3 Public Participation in Reporting Stormwater Issues	Public Participation in Stormwater, Illicit Discharge, and Erosion Control Issues	Provide methods for citizens to report concerns during and after business hours. Notify public of available reporting methods.	Document methods and frequency of public notifications.
		Respond to public concerns.	Document number of stormwater, erosion control, and illicit discharge complaints reported by citizens and note resolutions.
PI-4 Public Participation in Determining Stormwater Educational Focus	Determine Focus of Stormwater Educational Messages to the Public	Conduct a public survey to revise and refine educational messages related to stormwater and the TMDL Implementation Plan.	Provide copy or link to survey and report results of the survey.

2019 TMDL Activities Completed

Activities completed in 2019 for each measurable goal are described below.

PI-1 Stormwater Utility Fee (Ongoing)

The Citizen's Rate Review Committee (CRRC) was started in 1992 and consists of volunteers from the public who meet every two years to review utility rates proposed by staff. After a discussion with the committee, the rates are presented by staff to the City Council for approval. New stormwater related rates were adopted on April 1, 2018 and can be seen below in Table 1.

Table 1: Stormwater Utility Fee adopted April 1, 2018

Municipal Services Statement Fees – Stormwater Service Charges	
Service Charge ($/month)	$10.30
Storm System Development Fee*	
Single Family – Equivalent Dwelling Unit (EDU)	$358.64 flat fee
Other than Single Family	(Impervious Area/2877) x $358.64

*Revenues are used to maintain the City's Stormwater System. This fee is collected for each new development that connects to or otherwise uses the City's stormwater system and is determined by the square feet of impervious area. Impervious surface is the hard surface area which either prevents or retards entry of water into the soil mantel and/or causes water to run off the surface in greater quantities or at an increased rate of flow from that present under natural conditions. Impervious surface areas include, but are not limited to, rooftops, concrete or asphalt paving, walkways, patios, driveways, parking lots or storage areas and trafficked gravel or other surfaces which impede the natural infiltration or runoff of surface water. An equivalent dwelling unit (EDU) is equal to 2,877 square feet of impervious area.

The City of Newberg is currently going through the Rate Review update and the rate review meeting for the stormwater fund was held on November 21, 2019. It is anticipated that new rates will be adopted in April 2020. At the time of the stormwater fund presentation, there was a proposal for a 9% rate increase, ultimately City Council will make the final decision in April 2020.

PI-2 Public Participation in Stormwater Management (Ongoing)

The City is in the process of revising the grant forms and selection criteria and will be making an effort in 2020 to do more public outreach about the Watershed Grant Program.

PI-3 Public Participation in Reporting Stormwater Issues (Ongoing)

The Public Participation in Reporting Stormwater Issues best management practice consists of two measureable goals.

Provide Methods for Citizens to Report Stormwater Concerns (Ongoing)

In 2019, the City used its website to provide a phone number for the public to call about stormwater issues/concerns which are then logged in Cartegraph OMS, the City's asset management program, by the Maintenance Division. The City is anticipating rolling out a mobile app service in 2020 called SeeClickFix which would provide residents another way to report TMDL related issues around town. SeeClickFix will then integrate with Cartegraph OMS for better data management.

Respond to Public Concerns (Ongoing)

The City categorizes public concerns into four main categories which include illicit discharge, erosion control, flooding, and illegal dumping. Totals for each type of concern received in 2019 can be found in Table 2 and are inclusive of concerns received by both the maintenance division and code enforcement. More information concerning incident resolution for illicit discharge concerns can be found in Appendix B. Once a concern is logged, City staff works to keep that resident informed about the issue resolution.

Table 2: Stormwater Concerns Received from the Public

Types of Concerns	Number of Concerns Received					Total
	2018	2019	2020	2021	2022	
Illicit Discharge	1	8	-	-	-	9
Erosion Control	1	0	-	-	-	1
Flooding	7	1	-	-	-	8
Illegal Dumping	0	2	-	-	-	0

PI-4 Public Participation in Determining Stormwater Educational Focus (Incomplete, But Started)

This best management practice was scheduled for completion in June/July 2019. The Stormwater Survey has been developed and reviewed, and was ready to be published in summer 2019. However, in 2019 the City of Newberg went through a large 20-year horizon community visioning process called “A NewBERG Community Vision” led by the Community Development Department. As part of the community visioning work, there were several online survey opportunities for Newberg residents to provide comments. In order to avoid “survey fatigue” by the public, it was recommended that the developed Stormwater Survey be delayed for release until April 2020.

2019 Adaptive Management

The City of Newberg is modifying the completion date for the measureable goal listed under best management practice PI-4 from June/July 2019 to April 2020. As noted, the City of Newberg went through a large public outreach process in 2019 to update the community vision and in order to avoid “survey fatigue” by the public or to confuse the process it was recommend that the developed Stormwater Survey be delayed for release until April 2020.

Looking Ahead - 2020 Activities

Under Measure No. 2, there was one measurable goal under PI-4 with a completion date in 2019 that did not get completed, the completion date has been modified through adaptive management for completion in April 2020.

The remaining five of the six total measureable goals have a status of “ongoing” which means progress is made toward the goal each year via recurring activities.

Measure No. 3 – Illicit Discharge Detection and Elimination (IDDE)

The Illicit Discharge Detection and Elimination measure has four best management practices which include Training Staff to Implement IDDE, Implementation of the IDDE Plan, Hazardous Waste Collection, and the Drug Take-Back Program which are comprised of six (6) strategies and nine (9) measurable goals which are listed below and a status summary can be found in Appendix A:

Best Management Practice	Strategy	Measureable Goal	Performance Measure
Measure No. 3 – Illicit Discharge Detection and Elimination (IDDE)			
ID-1 Train Staff to Implement IDDE Plan	Train Staff in Illicit Discharge Investigation and Spill Response	Train new staff members in illicit discharge investigation and spill response. Provide training in some aspect of illicit discharge investigation and spill response every five years for all applicable staff.	Track type of training (webcast, class, certification, on-the-job, etc.), number of employees trained, and the training subject (maintenance, response, investigation, sampling, etc.).
ID-2 Implement IDDE Plan	Conduct Illicit Discharge Inspections	Fieldscreen outfalls.	Inventory type, size, and location of public and private outfalls. Map existing and new development outfall locations in GIS.
		Investigate outfalls for illicit discharges.	Document location, number and types of samples taken, date, cause, and resolution.
	Respond to Illegal Dumps	Clean up illegal dumps.	Track number of illegal dumps, citations issued, and resolution.
	Respond to Illicit Discharges/Spills	Fire Department spill response.	Track date and cause of spills that occur. Document whether the spill reached the stormwater system or a stream and if water sampling was conducted. Document response resolution.
		Public Works illicit discharge/spill response.	Track date and cause of illicit discharges/spills that occur, identified illicit discharges from private wastewater laterals or from failing public infrastructure. Document whether the pollutant reached the stormwater system or a stream and if water sampling was conducted. Document response resolution.
		Provide spill response cards and spill response kits on municipal trucks and sweepers.	Track number of municipal trucks and sweepers with spill response cards and spill kits. Document the number of spill kits used annually in response to spills.
ID-3 Hazardous Waste Collection	Provide Opportunity for Residents to Dispose of Hazardous Waste	Offer free hazardous waste collection service twice per year to City residents.	Track volume of waste received during collection events.

ID-4 Drug Take-Back Collection	Provide Opportunity for Residents to Dispose of Unused Medication	Offer free unused medication collection service to City residents.	Track the volume of unused medication collected annually.

2019 TMDL Activities Completed

Activities completed in 2019 for each measurable goal are described below.

ID-1 Train Staff in Illicit Discharge Investigation and Spill Response (Ongoing)

All Public Works Maintenance staff members attended a presentation on the O&M Stormwater Procedures Manual in March 2019. A portion of the presentation covered what to do when an illicit discharge happens and who needs to be notified. As noted in Table 2 and Appendix B, an increase number of illicit discharges were reported and responded to in 2019.

ID-2 Implement IDDE Plan (Ongoing)

The Implementation of the IDDE Plan consists of three strategies and six measurable goals.

Conduct Illicit Discharge Inspections (Ongoing)

The strategy for conducting illicit discharge inspections consists of two measurable goals.

Fieldscreen Outfalls (Ongoing)

The City screens outfalls during stormwater system maintenance and stream assessments. As maintenance performs work throughout the system, requests are made to the GIS department to update asset mapping.

Additionally, the City did a field walk/investigation of approximately 1.3 stream miles on the upper section of Hess Creek above OR99W in September 2019. During this field walk, outfalls were observed. No observations were made during the field walk/investigation that resulted in updates to the City's asset management system.

Investigate Outfalls for Illicit Discharges (Ongoing)

There were no events in 2019 that warranted samples being taken at an outfall location as a result of a known or suspected illicit discharge.

As part of the City's Stormwater Credit Program, one participant does perform its own sample testing at discharge locations. These records are kept by the applicant and they coordinate directly with DEQ to meet requirements of their 1200-Z permit.

Respond to Illegal Dumps (Ongoing)

The City of Newberg had two reported illegal dumps occur in 2019. One case was of a Christmas tree that was found abandon in a public street. The other case involved a renter who cut up the driveway of the home he was renting and dumped the asphalt/concrete into the adjacent wooded lot. When the renter was notified by code enforcement, the dumped debris was picked up and was removed and disposed of properly.

Respond to Illicit Discharges/Spills (Ongoing)

The strategy for responding to illicit discharges/spills consists of three measurable goals.

Fire Department Spill Response (Ongoing)

The Fire Department, Tualatin Valley Fire & Rescue (TVF&R) responded thirteen (13) "spill" incidents in 2019. In all cases the spills were either absorbed or contained and oils/petroleum were prevented from entering storm drains and/or permanently impacting streams. An Oregon Emergency Report System (OERS) report was filed with the State for one incident that occurred on October 24, 2019.

Public Works Illicit Discharge/Spill Response (Ongoing)

Public Works Maintenance Division responded to three illicit discharges/spills within the City in 2019 which are noted in Appendix B.

Spill Response Cards/Kits on Municipal Trucks and Sweepers (Ongoing)

The City of Newberg has PIG® Truck Spill Kits available on ten (10) public works vehicles. Maintenance staff are made aware of these spill kits and the associated instruction manual.

ID-3 Hazardous Waste Collection (Ongoing)

Yamhill County Solid Waste (YCSW) continues to sponsor hazardous waste collection events for Newberg in May and for McMinnville in October. Both events are open to all Yamhill County residents and it is an opportunity for residents to safely dispose of hazardous items for free. Annual totals from the hazardous waste collection events can be seen in Table 3.

Table 3: Yamhill County Solid Waste: Hazardous Waste Collection Events Summary

Year	City of Newberg Event (May)			City of McMinnville Event (October)		
	Hazardous Waste (pounds)	Paint (pounds)	Medications (pounds)	Hazardous Waste (pounds)	Paint (pounds)	Medications (pounds)
2018	32,697	22,500	36.3	31,679	9,500	480
2019	40,334	22,500	167.5	37,449	22,250	230
2020	-	-	-	-	-	-
2021	-	-	-	-	-	-
2022	-	-	-	-	-	-
Total	73,031	45,000	203.8	69,128	31,750	710

ID-4 Drug Take-Back Collection (Ongoing)

The City of Newberg has a Medication Disposal Site which is located inside the lobby of the City's Public Safety Building. The safe drop box is for the public to dispose of unneeded or expired medications. Over the counter and pet medications are also accepted at the drop box location. Medications collected are incinerated so they do not end up in the garbage or flushed down the drain, avoiding contamination of soil and drinking water. Annual totals from the Medication Take-Back Program can be seen in Table 4.

Table 4: City of Newberg Medication Take-Back Program Summary

Year	Medication Collected (pounds)
2018	887.5
2019	887.2
2020	-
2021	-
2022	-
Total	1774.7

2019 Adaptive Management

The City of Newberg is not proposing to modify any measurable goals through adaptive management.

Looking Ahead - 2020 Activities

Under Measure No. 3, there are no measurable goals with completion dates in 2020. All nine measureable goals have a status of "ongoing" which means progress is made toward the goal each year via recurring activities.

Measure No. 4 – Construction Site Stormwater Runoff Control

The Construction Site Stormwater Runoff Control measure has two best management practices which include Training Staff in Erosion and Sedimentation Control (ESC) and Implementation of the Erosion and Sediment Control Program which are comprised of two (2) strategies and four (4) measurable goals which are listed below and a status summary can be found in Appendix A:

Best Management Practice	Strategy	Measureable Goal	Performance Measure
Measure No. 4 – Construction Site Stormwater Runoff Control			
CS-1 Train Staff in Erosion and Sediment Control (ESC)	Train Staff in Plan Review, Site Inspection, and Enforcement of ESC Program	Train new staff whose responsibilities include erosion and sediment control plan review and enforcement. Provide refresher training to all staff involved in ESC every three years.	Document number of staff trained and type of training (on-the-job training, certification, or recertification).
CS-2 Implement Erosion and Sediment Control Program	Implement ESC Program	Conduct ESC plan review.	Document location and type (commercial, industrial, single-family residential, etc.) of all construction project plan reviews. Document which project obtained a DEQ 1200-C permit. Develop and send a notice letter to applicants on wet weather best management practices as weather conditions change.
		Conduct site inspections at least once during active construction by trained or experienced staff.	Provide number of erosion and sedimentation control inspections for each project. Document location and type (commercial, industrial, single-family residential, etc.) of construction project.
		Enforce ESC ordinances.	Report number of warning letters or non-compliance citations by project and resolution.

2019 TMDL Activities Completed

Activities completed in 2019 for each measurable goal are described below.

CS-1 Train Staff in Erosion and Sediment Control (Ongoing)

Two (2) engineering division staff members attended Certified Erosion and Sedimentation Control Lead Training in February 2019 and are now both certified CESCLs.

CS-2 Implement Erosion and Sediment Control Program (Ongoing)

The best management practice for implementing the ESC Program consists of three measureable goals.

Conduct ESC Plan Review (Ongoing)

Erosion and Sediment Control plans reviewed for major projects are listed in Appendix C. Projects exceeding 1-acre are required to obtain DEQ 1200-C permits and are noted, inspections of these permits are conducted by DEQ. The City had three construction projects in 2019 that were more than a single-family home and less than 1-acre that required City issued Erosion and Sediment Control Permits (see Appendix C). The remainder of the City issued Erosion and Sediment Control Permits in 2019, were reviewed and issued for 84 single-family residential developments.

In 2019 staff gave verbal reminders about best management practices to permit holders on the upcoming wet weather season and for specific storm events.

Conduct Site Inspections (Ongoing)

Staff reported that there were 84 single-family residential ESC permits with associated inspections in 2019 throughout the City of Newberg.

Enforce ECS Ordinances (Ongoing)

Staff reported no warning letters or non-compliance citations were issued in 2019.

2019 Adaptive Management

The City of Newberg is not proposing to modify any measurable goals through adaptive management.

Looking Ahead - 2020 Activities

Under Measure No. 4, there are no measurable goals with completion dates in 2020. All four measureable goals have a status of “ongoing” which means progress is made toward the goal each year via recurring activities.

Measure No. 5 – Post-Construction Runoff Control

The Post-Construction Runoff Control measure has three best management practices which include Develop a Stormwater Management Program, Train Staff in Stormwater Management, and Implement the Stormwater Management Program which are comprised of five (5) strategies and eight (8) measurable goals which are listed below and a status summary can be found in Appendix A:

Best Management Practice	Strategy	Measureable Goal	Performance Measure
Measure No. 5 – Post-Construction Runoff Control			
DS-1 Develop Stormwater Management Program	Update Stormwater Development Manuals and Standard Details	Update stormwater design standards manual and standard drawings. Notify development community of proposed new requirements before adoption.	Provide summary of changes and link to new design standards when adopted.
DS-2 Train Staff in Stormwater Management	Train Staff in Stormwater Management	Provide training opportunities for staff in watershed and stormwater management.	Track type of training (webcast, class, on-the-job, certification, etc.), number of employees trained, and the training subject (plan review, inspection, enforcement, etc.)
DS-3 Implement Stormwater Management Program	Require Stormwater Management for Development and Redevelopment	Require stormwater plan submittals and conduct plan reviews.	Document number of construction plan submittals, plan reviews, project type (commercial, institutional, residential, etc.), size, and location.
		Require stormwater management per the Stormwater Development Manuals and Standard Details.	Document number and type (detention basin, flow dissipater, raingarden, filtration swale, etc.) of stormwater facilities required for each project.
		Conduct pre-construction conferences to inform contractors about stormwater requirements.	Document number of pre-construction conferences, project type (commercial, institutional, residential, etc.), size, and location.
	Improve Watershed Management	Evaluate stormwater projects for treatment opportunities (new installations vs. existing infrastructure upgrades) i.e. Stormwater Master Plan.	Summarize hierarchy used for screening. Document location and number of sites reviewed, drainage area, and result of evaluation.
		Implement stormwater projects for treatment opportunities (new installations vs. existing infrastructure upgrades) i.e. Stormwater Master Plan.	Document number of projects including location, size, type (LIDA, traditional, etc.), and drainage area.
	Optimize Water Quality	Inspect public stormwater facilities post-construction.	Conduct a post-construction stormwater facility transfer. Complete final inspection at end of the two-year maintenance agreement. Document facility in GIS/asset management program, obtain and file stormwater as-built drawings, and facility maintenance plan.

2019 TMDL Activities Completed

Activities completed in 2019 for each measurable goal are described below.

DS-1 Develop Stormwater Management Program (Incomplete, But Started)

This best management practice included updates to standard drawings in December 2019, and updates to the stormwater design standards in December 2020 (target dates). Based on both staff feedback and feedback from the construction community, updates were made to the City's standard drawings to provide more clarity where necessary. However, due to staffing availability in 2019 this work was not fully completed. A new target date of December 2020 has been set for this goal of completing updates to the standard drawings.

DS-2 Train Staff in Stormwater Management (Ongoing)

The following stormwater related trainings were attended in 2019:

- One Engineering Division staff member attended the TMDL designated management agency (DMA) meetings to learn from other DMA coordinators throughout the Willamette basin.
- One Engineering Division staff member attended the 2019 APWA Oregon Chapter Spring Conference in April 2019.
- One Engineering Division staff member attended the 2019 APWA Oregon Chapter Fall Conference in October 2019.
- Two Engineering Division staff members attended Certified Erosion and Sedimentation Control Lead Training in February 2019.
- Several employees from both the Engineering Division and Maintenance Division attending the American Public Works Association (APWA) National Conference in Seattle in September 2019.
- One Maintenance Division staff member attended the Vactor Operation and Maintenance training in 2019.
- Five Maintenance Division staff members attended the APWA Spring Street Maintenance and Collections training in 2019.
- Five Maintenance Division staff members attended APWA Fall Street Maintenance and Collections training in 2019.

DS-3 Implement Stormwater Management Program (Ongoing)

The best management practice Implement Stormwater Management program consists of three strategies; Require Stormwater Management for Development and Redevelopment, Improve Watershed Management, and Optimize Water Quality.

Require Stormwater Management for Development and Redevelopment (Ongoing)

The strategy Require Stormwater Management for Development and Redevelopment consists of three measurable goals.

Require Stormwater Plan Submittals and Conduct Plan Reviews (Ongoing)

The City requires that all development/redevelopment projects that create a net new impervious surface area that exceeds 500 square feet of either public or private property must treat and detain stormwater.

The projects found in Appendix D represent construction plans received and reviewed for stormwater management in regards to development and redevelopment. The project type, size, and location are noted.

Additionally the Engineering Division participated in 31 pre-application meetings in 2019 where City stormwater requirements were discussed with applicants.

Require Stormwater Management per the Stormwater Development Manuals and Standard Details (Ongoing)

Appendix D notes the number and type of stormwater facilities constructed for each project that was either completed or started in 2019. Public stormwater facilities are then added to the City's GIS system once a development's as-builts are provided to the City.

Private stormwater facilities are required to have recorded Stormwater Maintenance Agreements with the City of Newberg which provide guidance on maintenance activities into perpetuity.

Conduct pre-construction conferences to inform contractors about stormwater requirements (Ongoing)

The City typically holds pre-construction conferences for all public improvement projects, and for larger private development projects within the City. Pre-construction meetings are noted in Appendix D. The City held eleven pre-construction meetings (six private development meetings and five meetings for public improvement projects) for projects that were either completed or started in 2019.

Improvement Watershed Management (Ongoing)

The strategy Improve Watershed Management consists of two measureable goals.

Evaluate stormwater projects for new treatment opportunities (Ongoing)

Each year the City establishes a 5-Year Capital Improvement Plan (CIP) that balances infrastructure needs based on a variety of sources including the Stormwater Master Plan, City Council goals, operational needs, and regulatory obligations.

The stormwater projects included in the fiscal year (FY) 2020-2021 project list include the following:

- **N Elliot Road** – There is currently no storm drainage in N Elliot Road resulting in frequent ponding alongside the roadway. This project would add an 18-inch storm pipe to the system as part of a larger roadway project.

- **N Springbrook Road** – There are existing gaps in the public storm drainage system in N Springbrook Road, improvements will be made as part of the larger street project.
- **800 Block of Wynooski Street** – Correct a current pipe and outfall that is eroding an area east of Wynooski Street.
- **Update Stormwater Master Plan** – The Riverfront Master Plan was recently adopted and will need to be incorporated into the Stormwater Master Plan, the current Stormwater Master Plan was adopted in 2014 and gets updated every five years.
- **Railroad Ditch; N College Street to N Meridian Street** – This area experiences flooding from a variety of contributing sources. This project will study the issues and develop a solution to be implemented in a future plan year.

These projects are scheduled for work to begin over the next fiscal year and are consistent with the City's stormwater infrastructure and planning needs. As projects move toward preliminary design, they will be reviewed for treatment opportunities based on the City's established stormwater facility hierarchy as noted in the Public Works Design and Construction Standards Section 4.6.8 Facility Selection Hierarchy.

Implement stormwater projects for treatment opportunities (Ongoing)

The N Elliot Road project was identified as a high priority project because it provides direct access to the high school. Areas of N Elliot Road were also identified as having drainage problems in the Stormwater Master Plan. As the roadway design develops, both new and existing stormwater will be treated and detained within the system.

The N Springbrook Road project identified in 2020/2021 is an exploratory analysis of the existing conditions to determine what steps can be taken to correct storm drainage issues in advance of a larger million dollar project in 2022/2024.

The 800 Block of Wynooski Street project was started in 2018 with the support of the George Fox University engineering program under the guidance of the City's Public Works Director. An engineering consultant was then brought on board in 2019 to finish the design and get the package ready for bid. The Joint Permit Applicant for the work occurring in both jurisdictional waters of the state and wetland was received by the State in late-February 2020 and the City is hopeful the work can be completed by the end of 2020.

Optimize Water Quality (Ongoing)

The City requires a two-year maintenance agreement for all private development of public stormwater facilities. As an example, if a subdivision is built and requires a detention pond to mitigate stormwater, the development enters into a two-year maintenance agreement with the City to maintain that stormwater facility through the establishment phase. When the two year maintenance agreement is coming to an end, a final inspection is scheduled and completed to

allow for the developer to correct any problems before the stormwater facility becomes the responsibility of the City.

In 2019 the following stormwater facility was transferred from the private maintenance agreements to public stormwater maintenance:

- Columbia Estates (Detention Pond)

This facilities has been added to the City's asset management program (both GIS and Cartegraph OMS), and as-builts are available for review through an internal staff portal.

2019 Adaptive Management

The City of Newberg is modifying the completion date for the measureable goal listed under best management practice DS-1, Updates to the Stormwater Standard Drawings, from December 2019 to December 2020. As noted, the Engineering Division experienced some challenges with staffing availability in 2019 and is therefore moving the completion date of this goal out one calendar year.

Looking Ahead - 2020 Activities

Under Measure No. 5, there was one measurable goal with a completion date in 2019 that did not get completed. The City was scheduled to update standard drawings related to stormwater in December 2019, but do to staffing availability this goal has been moved out to December of 2020.

Additionally, there are two measurable goals to be completed in 2020 which include DS-1 Updates to the Stormwater Standards Manual (December 2020) and DS-3 Update the City's Stormwater Master Plan and associated stormwater project lists (June 2020).

The remaining seven of the eight total measureable goals have a status of "ongoing" which means progress is made toward the goal each year via recurring activities.

Measure No. 6 – Pollution Prevention in Municipal Operations

The Pollution Prevention in Municipal Operations has three best management practices which include the Operations and Maintenance (O&M) Manual, Operations and Maintenance Training, and Stormwater Infrastructure Maintenance. These three best management practices are comprised of five (5) strategies and fourteen (14) measurable goals which are listed below and a status summary can be found in Appendix A:

Best Management Practice	Strategy	Measureable Goal	Performance Measure
Measure No. 6 – Pollution Prevention in Municipal Operations			
OM-1 Operations and Maintenance (O&M) Manual	Update O&M Policies	Review existing O&M practices.	Document current procedures in an O&M manual.
		Update O&M manual to optimize water quality.	Document modifications to manual.
	Update Infrastructure Procedures	Review and evaluate the need to update the catch basin cleaning program.	Document current procedures and any modifications to optimize water quality.
		Implement revised catch basin cleaning program.	Track progress.
	Update Street Sweeping Procedures	Review and evaluate the need to update the street sweeping program.	Document current procedures and any modifications to optimize water quality
		Implement revised street sweeping program.	Track progress.
OM-2 Operations and Maintenance Training	Train staff in infrastructure and street sweeping procedures that optimize water quality	Train new staff in stormwater maintenance duties in O&M procedures manual.	Track type of training (webcast, class, certification, on-the-job, etc.), number of employees trained, and the training subject (inspections, maintenance, repair, construction, etc.)
		Train all staff in revised O&M procedures manual every three years.	Track type of training (webcast, class, certification, on-the-job, etc.), number of employees trained, and the training subject (inspections, maintenance, repair, construction, etc.)
OM-3 Stormwater Infrastructure Maintenance	Maintain stormwater infrastructure	Clean catch basins.	Track number of catch basins cleaned per year.
		Place trash racks over major inlets.	Track number and percentage of major inlets installed with trash racks.
		Inspect, clean, repair, replace, and install stormline.	Track length of stormline inspected. Document length of stormline cleaned. Document length and location of stormline repaired or replaced. Track length, diameter and location of stormline installed.

		Inspect, repair, and replace culverts.	Document location of repaired and replaced culverts and reason for repair or replacement. For newly installed culverts, document new culvert size, material, and elevation from culvert bottom to stream bottom.
		Inspect and repair public stormwater facilities.	Document number of inspections, type of facility (detention basin, LIDA facilities, vegetated swale, etc.) and whether facilities were categorized as excellent, fair, or poor condition.
		Sweep streets every 4-6 weeks.	Track curb miles swept and debris collected per curb mile each year. Document disposal method.

2019 TMDL Activities Completed

Activities completed in 2019 for each measurable goal are described below.

OM-1 Operations and Maintenance Manual (Complete/Ongoing/Incomplete, But Started/Not Started)

The Operations and Maintenance Manual best management practice consists of three strategies; Update O&M Policies, Update Infrastructure Procedures, and Update Street Sweeping Procedures.

Update O&M Policies (Completed/Not Started)

The Update O&M Policies strategy consists of two measureable goals.

Review existing O&M practices (Completed)

The City developed an Operations and Maintenance Manual in 2018 to document current maintenance procedures as they relate to stormwater. The Manual was completed in early December and sent to DEQ on December 10, 2018. The Manual covers stormwater work flow, public participation in reporting stormwater issues, stormwater inspection and cleaning, stormwater repair and replacement, illicit discharge investigation and spill response, the catch basin cleaning program, the street sweeping program, and the newly deployed operations management program called Cartegraph OMS.

Update O&M manual to optimize water quality (Not Started)

The Operations and Maintenance Manual is scheduled to be reviewed and updated every three years. The manual is scheduled for a review and update in December 2022, and this work has not yet been started.

Update Infrastructure Procedures (Ongoing/Incomplete, But Started)

The Update Infrastructure Procedures strategy consists of two measurable goals.

Review and evaluate the need to update the catch basin cleaning program (Incomplete, But Started)

As part of developing the Stormwater Operations and Maintenance Manual and the implementation of the City's new operations management program called Cartegraph OMS, the existing catch basin cleaning program was discussed. Attribute tables for catch basins inside of the Cartegraph OMS system were modified to capture the data most relevant to our maintenance division and to support reporting as part of the TMDL plan. Due to staffing availability, a draft catch basin cleaning program document was drafted in December 2019, but has not yet been through final review and approval. It is anticipated that this work can be completed by July 2020 and will be rolled into the existing Stormwater Operations and Maintenance Manual.

Implement revised catch basin cleaning program (Ongoing)

The City continues to implement the existing catch basin cleaning program annually, and as the program is revised/updated in July 2020 will follow any proposed modifications. Information regarding catch basins cleaned annually can be found in section OM-3 Stormwater Infrastructure Maintenance.

Update Street Sweeping Procedures (Ongoing/Not Started)

The Update Street Sweeping Procedures strategy consists of two measurable goals.

Review and evaluate the need to update the street sweeping program (Not Started)

The City is scheduled to review and evaluate the need to update the street sweeping program in July 2020. As such, this task has not yet been started.

Implement revised street sweeping program (Ongoing)

The City continues to implement the existing street sweeping program annually, and as the program is revised/updated in July 2020 will follow any modifications made.

OM-2 Operations and Maintenance Training (Ongoing)

The Operations and Maintenance Training best management practice has one strategy which is to train staff in infrastructure and street sweeping procedures that optimize water quality. The strategy has two (2) measureable goals.

Train new staff in stormwater maintenance duties in O&M procedures manual (Ongoing)

The Maintenance Division proactively trains new employees on the day to day tasks associated with stormwater maintenance duties. Much of this training is "on-the-job" and is taught through the experience of completing tasks like cleaning catch basins or stormwater lines. Additionally the following training was attended by the Maintenance Division staff members:

- A presentation was given in March 2019 to the Maintenance Division about the recently completed Operations and Maintenance Manual, which documents current maintenance procedures as they relate to stormwater.

- One Maintenance Division staff member attended the Vactor Operation and Maintenance training in 2019.
- Five Maintenance Division staff members attended the APWA Spring Street Maintenance and Collections training in 2019.
- Five Maintenance Division staff members attended APWA Fall Street Maintenance and Collections training in 2019.

Train all staff in revised O&M procedures manual every three years (Ongoing)

The City developed an Operations and Maintenance Manual to document current maintenance procedures as they relate to stormwater. The Manual was completed in December 2018 and sent to DEQ on December 10, 2018. A presentation of the manual was given to the entire Maintenance Division on March 14, 2019. Two hard copies of the manual were provided (one for each maintenance building), and all staff members were sent an email with the location of the digital copy. This presentation will then be given every three years in coordination with the manual update.

OM-3 Stormwater Infrastructure Maintenance (Ongoing)

The Stormwater Infrastructure Maintenance best management practice has one strategy which is to maintain stormwater infrastructure. The strategy has six (6) measurable goals.

Clean catch basins (Ongoing)

There were 86 catch basins/grates cleaned in 2019, as is shown in Table 5.

Place trash racks over major inlets (Ongoing)

There were no trash racks installed in 2019, as is shown in Table 5.

Inspect, clean, repair, replace, and install stormline (Ongoing)

The amounts of stormline inspected, cleaned, repaired, replaced, and installed in 2019 can be seen in Table 5. It should be noted that a large increase in inspections and cleanings took place. The Maintenance Division has committed to inspecting and cleaning all stormwater lines on a six-year rotation and are doing much of this work in coordination with the City's Pavement Preservation Project. Both storm and sewer lines are inspected and cleaned prior to new pavement treatments being installed on the roadway surfaces.

Inspect, repair, and replace culverts (Ongoing)

The amounts of culverts inspected, repaired, and replaced in 2019 can be seen in Table 5. The City recognizes that storm culverts and storm pipe can be perceived as the same thing and in some instances information logged in our asset management system may not be fully capturing the work accomplished. As an example, if a length of storm pipe has a culvert in it, the storm pipe gets noted as cleaned but information may not get added to the culvert asset. This will be a point of focus in the coming year to modify our asset management system appropriately to capture the data accordingly.

Table 5: Stormwater Infrastructure Maintenance Activities from 2018 to 2022

Stormwater Maintenance Activity	2018	2019	2020	2021	2022
Catch Basin/Grates Cleaned	75	86	-	-	-
Trash Racks Installed	0	0	-	-	-
Stormline Inspected, feet	2,089	32,707	-	-	-
Stormline Cleaned, feet	4,390	33,121	-	-	-
Stormline Repaired, feet	0	13	-	-	-
Stormline Replaced, feet	0	12	-	-	-
Stormline Installed, feet*	0	0	-	-	-
Ditch Cleaned, feet	125	0	-	-	-
Culvert Inspected	0	0	-	-	-
Culvert Repaired	0	0	-	-	-
Culvert Replaced	0	0	-	-	-

*This value represents stormline installed by the City's Maintenance Division only, and is not inclusive of new development within the City.

Inspect and repair public stormwater facilities (Ongoing)

The City inspects and repairs public stormwater facilities on an annual basis, 2019 activities can be seen in Table 6. In 2019, visual inspections of public stormwater facilities including detention areas, spillways, and water quality swales was done in August 2019. Seventeen public stormwater facilities were visually inspected and rated.

Two facilities were identified in poor condition in 2019. The Highland 3 subdivision stormwater facility (STS H1301) is still under the developer's warrant period and received maintenance in November 2019, and the Shellie Park subdivision stormwater facility (STS G1103) received maintenance in September 2019 as part of the George Fox University Serve Day. George Fox students also cleaned the stormwater facilities located on the south side of Worth Boulevard (STS J1202) and E Edgewood Drive (STS G0801) during the Serve Day event.

The City of Newberg also has a contract in place with Yamhill County to utilize Yamhill County Jail Work Crews to do some maintenance of stormwater facilities. Staff is currently putting together tailored maintenance plans for stormwater facilities.

Table 6: Stormwater Facility Activities from 2018-2022

Stormwater Facility Activities		2018	2019	2020	2021	2022
Total Facilities (Detention Areas, Spillways, and Water Quality Swales)		83	93	-	-	-
Inspections		26	17	-	-	-
Type	Detention Area	21	8	-	-	-
	Spillway	2	1	-	-	-
	Water Quality Swale	3	8	-	-	-
Condition	Excellent	4	3	-	-	-
	Fair	18	12	-	-	-
	Poor	4	2	-	-	-
Facility Repairs		4	2	-	-	-

Sweep streets every 4-6 weeks (Ongoing)

The City cleans streets approximately once each month. In 2019, 943 cubic yards of debris were removed while sweeping 1,797 curb miles. Based on the success of the third-party pilot program for street sweeping in the downtown along State highways, the City decided to fully implement this third-party approach. Information regarding both the City's street sweeping activities and the contracted street sweeping activities can be found in Table 7.

Table 7: Street Sweeping Activities from 2018 to 2022

Street Sweeping Activities (Public and Private)	2018	2019	2020	2021	2022
Sweeping Debris (Cubic Yards)	1,009	943	-	-	-
Street Sweeping Miles (curb miles)	2,016	1,797	-	-	-
Cubic Yard per Mile Swept	0.50	0.52	-	-	-
Contracted Sweeping Debris (Cubic Yards)	95*	158**	-	-	-
Contracted Street Sweeping Miles	64*	216**	-	-	-
Contracted Cubic Yard per Mile Swept	1.5*	0.73**	-	-	-

*A pilot program was started in September 2019 to have OR99W swept between the western city limits and Villa Road using a third party contractor. That section of OR99W is swept twice a month.

**The City has fully implemented a permanent third-part street sweeping contract for services along State highways in the downtown. The downtown is swept twice a month.

2019 Adaptive Management

The City of Newberg is modifying the completion date for the measureable goal listed under best management practice OM-1, Update Infrastructure Procedures – Catch Basin Cleaning Program, from July 2019 to July 2020. As noted, the Engineering Division had limited staffing availability in 2019 and is therefore moving the completion date of this goal out one calendar year.

Looking Ahead - 2020 Activities

Under Measure No. 6, there was one measureable goal with a completion date in 2019 that did not get completed. The City was scheduled to update the Catch Basin Cleaning Program in July 2019, but due to staffing available this goal has been moved out to July 2020 for completion.

The other measurable goal due in July 2020 is to review and evaluate the need to update the City's Street Sweeping Program.

Of the 14 total measurable goals under Measure No. 6, one goal has been completed, one goal is incomplete but started, two goals have not yet started, and the remaining ten measureable goals have a status of "ongoing" which means progress is made toward the goal each year via recurring activities.

Temperature

The Temperature criteria includes Maintaining Existing Stream Vegetation, Increase Effective Shade, and conducting Stream Assessments. These three (3) best management practices are comprised of three (3) strategies, and seven (7) measurable goals which are listed below and a status summary can be found in Appendix A:

Best Management Practice	Strategy	Measureable Goal	Performance Measure
Temperature			
T-1 Maintain Existing Stream Vegetation	Use Municipal Code and other Measures to Maintain Stream Vegetation	Update Municipal Code that can affect stream health.	Update ordinances that affect stream vegetation.
		Update Stream Corridor Overlay.	Document changes to the Stream Corridor Overlay map and code based on wetland inventory and property annexation.
T-2 Increase Effective Shade	Increase Shade along Streams within the City	Continue with established Trees for Streams Program. Provide incentives (free or reduce cost native plant materials) for citizens to plant trees, shrubs, and grasses along tributaries or streams within the City limits.	Document watershed and number of native plant types (trees, shrubs, grasses) planted per year.
T-3 Stream Assessment	Assess Stream Health and Canopy Coverage	Assess at least one stream mile annually for vegetative ground cover, stream channel configuration, and canopy coverage.	Document results of assessment.
		Complete a wetland inventory that encompasses the Urban Reserve areas. Update wetland inventory when Department of Land Conservation and Development (DLCD) provides funding for City's comprehensive plan periodic review.	Track progress. Provide link to wetland inventory and map.
		Develop stream temperature monitoring program.	Document procedures and identify locations for sampling.
		Implement stream temperature monitoring program.	Document sampling locations, dates, and results.

2019 TMDL Activities Completed

Activities completed in 2019 for each measurable goal are described.

T-1 Maintain Existing Stream Vegetation (Ongoing)

The best management practice Maintain Existing Stream Vegetation has one strategy which is to use the Municipal Code and other measures to maintain stream vegetation. The strategy has two (2) measureable goals.

Update Municipal Code that can affect stream health (Ongoing)

The City had no ordinances adopted in 2019 that would affect stream health.

Update Stream Corridor Overlay (Ongoing)

There were no code changes or map changes to the Stream Corridor Overlay in 2019. There were a few different projects that went through the land-use process where the City's Stream Corridor Overlay code was followed. Those projects are listed below:

- 1904 Birch Lane – Single Family Residential Home: Stream Corridor Impact Report – variance application (MISC318-0003)
- NE Chehalem Drive Water Line and Wastewater Line Extension: Utility extension (MISC119-0079)

T-2 Increase Shade along Streams within the City (Ongoing)

The City continues to promote and facilitate a Trees for Streams Program in coordination with the Northwest Oregon Restoration Partnership (NORP). Native plant materials are purchased at a reduced cost from NORP in exchange for City volunteer hours each year; in 2019 the City's plant invoice was $116.00. The City then provides native plant materials for free to interested property owners who live within the city limits and whose properties abut Chehalem Creek, Hess Creek, Spring Brook or tributaries to these stream systems. This program gives the City an opportunity to build relationships with private land owners who own the majority of the property along the City's stream systems, and to stabilize stream temperatures within the City by increasing the amount of shade. Native plant materials provided to residents in 2019 can be seen in Figure 3 and Table 8.

In 2019, five Newberg community members participated in the Trees for Streams Program and plants were distributed through all three watersheds. These land owners planted native plants along a total of 0.3 miles of streams/tributaries and positively impacted a total of 1.56 riparian acres within the City of Newberg.

Figure 3: 2019 Plants received from NORP and distributed to Newberg Residents

Table 8: Trees for Streams Program Native Plant Totals from 2018 to 2022

	2018	2019	2020	2021	2022	Total
Chehalem Creek Watershed						
Trees	16	19	-	-	-	19
Shrubs	49	24	-	-	-	24
Groundcovers	20	5	-	-	-	5
Hess Creek Watershed						
Trees	-	5	-	-	-	5
Shrubs	-	12	-	-	-	12
Groundcovers	-	8	-	-	-	8
Spring Brook Watershed						
Trees	-	5	-	-	-	5
Shrubs	-	38	-	-	-	38
Groundcovers	-	0				0
Total	85	116	-	-	-	116

T-3 Stream Assessment (Ongoing/Completed/Not Started)

The best management practice Stream Assessment has one strategy to Assess Stream Health and Canopy Coverage. The strategy has four (4) measureable goals.

Assess at least one stream mile annually for vegetative ground cover, stream channel configuration, and canopy coverage (Ongoing)

In September 2019, the City did a field walk and investigation of approximately 1.3 stream miles on the upper section of Hess Creek above OR99W. This work was done in advance of having all of the manholes along the Hess Creek alignment surveyed for a future capital improvement project. This stream walk was done in coordination with the Engineering Division and the Maintenance Division and was used to evaluate both the stream corridor and the City's wastewater infrastructure which follows the Hess Creek alignment. Qualitative assessments were done concerning vegetative ground cover, stream channel configuration, and canopy coverage.

Additionally in order to better evaluate stream canopy coverage, web mapping was developed to compare aerial imaging over time. The City of Newberg generally obtains a new aerial image of the City every two years as part of the GIS mapping program. These images can then be compared to evaluate stream canopy coverage over time. Images are typically capture during the spring/summer months so relative comparisons can be made and currently the 2014, 2016, and 2018 aerials are available for viewing comparison. The online mapping tool can be found here: https://newberg.maps.arcgis.com/apps/webappviewer/index.html?id=99e5d269a8a84b74bb7e79f4dc8f37ba.

Figure 4: Stream Corridor Aerial Imaging Canopy Coverage Comparison

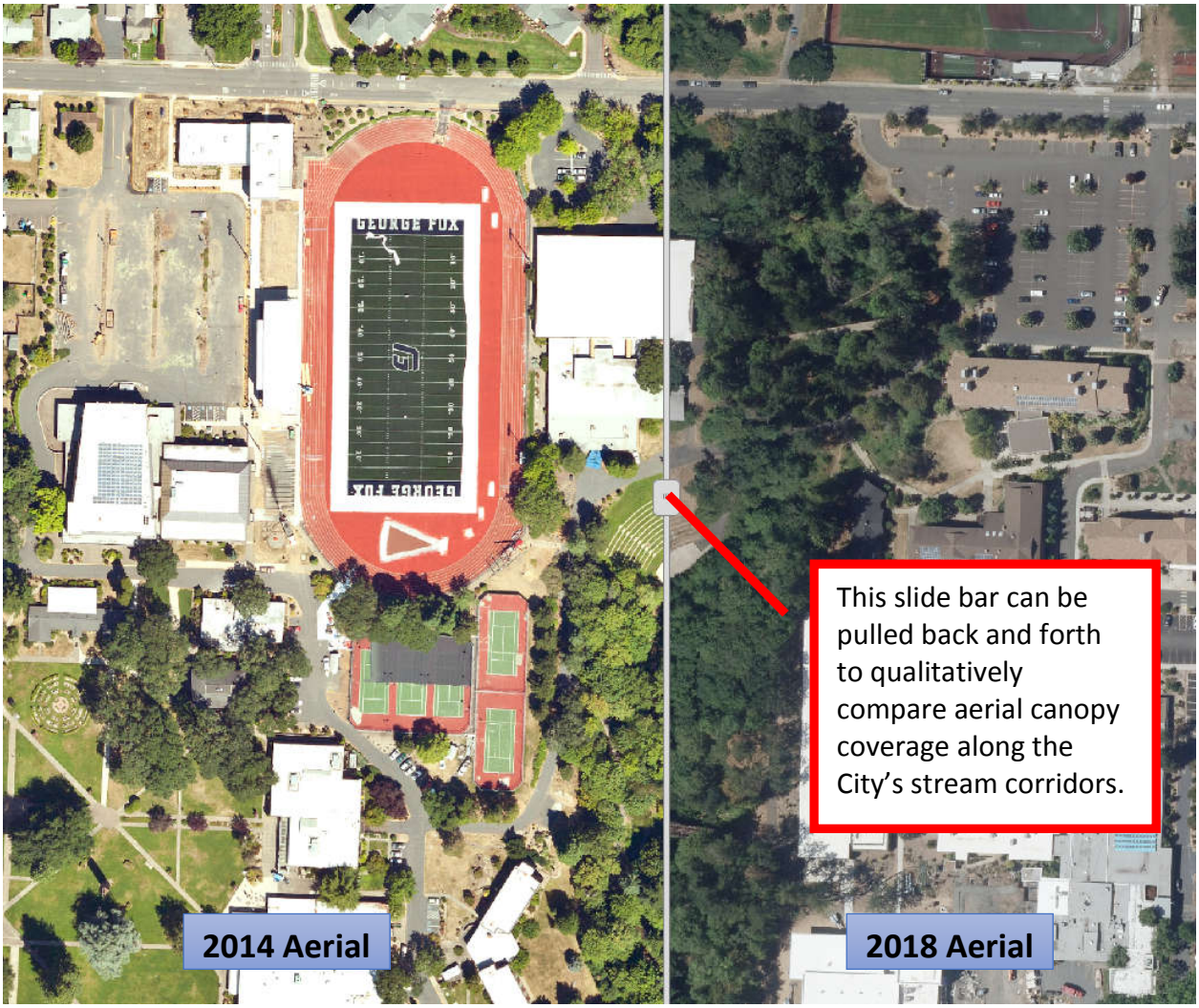

Complete a wetland inventory that encompasses the Urban Reserve areas. Update wetland inventory when Department of Land Conservation and Development (DLCD) provides funding for City's comprehensive plan periodic review (Ongoing)

The City of Newberg completed an update to the Water Management and Conservation Plan in 2019 and as part of the correspondence with the Department of State Lands, it was noted that the City has not yet completed a Local Wetlands Inventory (LWI) for Goal 5. The City was made aware that the State now has some funding resources available to facilitate this process through the Department of Land Conservation and Development (DLCD) Community Technical Assistance Grant. Internal discussions have begun to plan for this future effort.

As a proxy to a Local Wetland Inventory map, the City of Newberg does have a Stream Corridor Overlay Subdistrict with regulations about activities that can and cannot occur

within the established boundary. Based on evaluation of the National Wetlands Inventory (NWI) online mapping tool, it appears that most areas with high wetland probability are located within the City's establish Stream Corridor Overlay Subdistrict. The regulations around activities within this subdistrict can be read in Newberg Municipal Code (NMC) *Chapter 13.342 Stream Corridor Overlay (SC) Subdistrict*. The City also has an online interactive planning map where the Stream Corridor Overlay can be see here: https://www.arcgis.com/home/webmap/viewer.html?webmap=1de60af01cb64885af90c5eb94d565b4&extent=-123.0064,45.3093,-122.9906,45.3159.

Develop stream temperature monitoring program (Completed)

The development of Stream Temperature Monitoring Program was done in coordination with the Greater Yamhill Watershed Council and online resources from DEQ and the Oregon Watershed Enhancement Board (OWEB). Procedures were developed based on both best practices and field experience deploying exploratory water loggers over the last few years. The completed Stream Temperature Monitoring Program document can be found in Appendix F and will be used by all future staff members to insure consistency with collecting data.

Implement stream temperature monitoring program (Not Started)

The implementation of the stream temperature monitoring program is scheduled to start in May 2020. When water loggers are deployed, deployment will follow the procedures established in the Stream Temperature Monitoring Plan.

2019 Adaptive Management

The City of Newberg is not proposing to modify any measurable goals through adaptive management.

Looking Ahead - 2020 Activities

Under the Temperature best management practice there is one measurable goal with a completion date in May 2020. The measurable goal is to "implement the stream temperature monitoring program" which is scheduled to begin in May 2020 and will become and ongoing effort.

Of the seven total measurable goals under Temperature, one goal has been completed, one goal has not yet started, and the remaining five measureable goals have a status of "ongoing" which means progress is made toward the goal each year via recurring activities.

Next Steps

As has been documented in the annual report the City of Newberg made a significant effort in 2019 to protect water quality and the environment within the City through seven focus areas. Looking forward to the 2020 plan year, the City will continue to make progress on the "ongoing" measurable goals, and has identified the following items to be completed in 2020 including some items noted per the adaptive management sections:

- **PE-2 Public Signage**: Develop a public infrastructure signage program to determine sign locations and messaging (December 2020)
- **PI-4 Public Participation in Determining Stormwater Educational Focus**: Conduct a public survey to revise and refine educational messages related to stormwater and the TMDL Implementation Plan (April 2020) – ***Adaptive Management***
- **DS-1 Develop Stormwater Management Program**: Update stormwater standard drawings and notify the development community of proposed new requirements/modifications before adoption (December 2020) – ***Adaptive Management***
- **DS-1 Develop Stormwater Management Program:** Update stormwater standards manual and notify the development community of proposed new requirements/modifications before adoption (December 2020)
- **DS-3 Update the City's Stormwater Master Plan:** Update the City's Stormwater Master Plan and associated stormwater project lists (June 2020)
- **OM-1 Operations and Maintenance (O&M) Manual**: Review and evaluate the need to update the catch basin cleaning program (July 2020) – ***Adaptive Management***
- **OM-1 Operations and Maintenance (O&M) Manual**: Review and evaluate the need to update the street sweeping program (July 2020)
- **T-3 Stream Assessment**: Implement stream temperature monitoring program (May 2020)

We look forward to our continued stewardship of the Chehalem Creek, Hess Creek, and Spring Brook watersheds.

Appendix Summary

Appendix A: Newberg TMDL Implementation Matrix 2018-2022

Appendix B: Illicit Discharge Investigations 2018-2022

Appendix C: Construction Site Stormwater Management 2018-2022

Appendix D: Post-Construction Stormwater Management 2018-2022

Appendix E: 2018 TMDL Accomplishments

Appendix F: Stream Temperature Monitoring Program

Appendix A: Newberg TMDL Implementation Matrix 2018-2022

Appendix A: City of Newberg TMDL Implementation Matrix 2018-2022 (Update 11/28/2018 per DEQ Comments)

Best Management Practice	Strategy	Measureable Goal	Performance Measure	Expected Implementation Timeline	2019 Status	Pollutants		
						Mercury	Bacteria	Temperature
Measure No. 1 – Public Education								
PE-1 Stormwater Education	Website Education	Provide stormwater information on the City's website.	Provide general stormwater information and website links to the annual TMDL Implementation Plan.	Ongoing	Ongoing	X	X	X
	Citizen Group Education	Present stormwater information to interested citizen groups at local venues.	Track number of presentations, presentation messages, and number of participants (if available).	Ongoing	Ongoing	X	X	X
	Water Quality Report	Provide stormwater education in the City's annual Water Quality Report.	Provide website links to the annual Water Quality Report, and track stormwater messages included in the report.	Ongoing	Ongoing	X	X	X
PE-2 Watershed Education	Public Signage	Develop public infrastructure signage program.	Develop public infrastructure signage program to determine sign locations and messaging.	December 2020	Not Started	X	X	X
		Provide signage at stream crossings or LIDA infrastructure facilities.	Track number of signs installed and associated messages.	December 2022	Not Started	X	X	X
		Mark 50 unmarked catch basins a year with "No Dumping, Drains to Stream" type language.	Track number of catch basins marked per year. Prepare GIS map showing coverage of locations that are permanently marked or marked with after-market plastic labels.	Ongoing	Ongoing	X	X	X
	Student Education	Provide watershed education to students.	Track number of presentations, presentation messages, and number of participants (if available).	Ongoing	Ongoing	X	X	X
Measure No. 2 – Public Involvement								
PI-1 Stormwater Utility Fee	Participate in Citizen Rate Review Committee (CRRC) Meetings	Present stormwater funding needs to CRRC.	Document meeting attendance, adopted rates, and effective dates of rate changes.	Ongoing; Fall 2019/Spring 2020; Fall 2021/Spring 2022	Ongoing	X	X	X
PI-2 Public Participation in Stormwater Management	Provide Grant Funding for Water Quality Improvement or Watershed Awareness Projects	Provide a minimum of $2,000 in a grant program to fund non-profit projects that fulfill goals of the TMDL plan.	Track number of funded projects, amount disbursed per project, stream affected, and either the number of stream miles affected or the number of participants.	Ongoing	Ongoing	X	X	X
PI-3 Public Participation in Reporting	Public Participation in Stormwater, Illicit Discharge, and	Provide methods for citizens to report concerns during and after business hours. Notify public of available reporting methods.	Document methods and frequency of public notifications.	Ongoing	Ongoing	X	X	X

Best Management Practice	Strategy	Measureable Goal	Performance Measure	Expected Implementation Timeline	2019 Status	Pollutants		
						Mercury	Bacteria	Temperature
Stormwater Issues	Erosion Control Issues	Respond to public concerns.	Document number of stormwater, erosion control, and illicit discharge complaints reported by citizens and note resolutions.	Ongoing	Ongoing	X	X	X
PI-4 Public Participation in Determining Stormwater Educational Focus	Determine Focus of Stormwater Educational Messages to the Public	Conduct a public survey to revise and refine educational messages related to stormwater and the TMDL Implementation Plan.	Provide copy or link to survey and report results of the survey.	~~June/July 2019~~ **April 2020 – Adaptive Management**	Incomplete, But Started	X	X	X
Measure No. 3 – Illicit Discharged Detection and Elimination (IDDE)								
ID-1 Train Staff to Implement IDDE Plan	Train Staff in Illicit Discharge Investigation and Spill Response	Train new staff members in illicit discharge investigation and spill response. Provide training in some aspect of illicit discharge investigation and spill response every five years for all applicable staff.	Track type of training (webcast, class, certification, on-the-job, etc.), number of employees trained, and the training subject (maintenance, response, investigation, sampling, etc.).	Ongoing	Ongoing	X	X	X
ID-2 Implement IDDE Plan	Conduct Illicit Discharge Inspections	Fieldscreen outfalls.	Inventory type, size, and location of public and private outfalls. Map existing and new development outfall locations in GIS.	Ongoing; December 2019 (Initial Mapping); December 2022 (Complete mapping and ongoing for new development)	Ongoing	X	X	X
		Investigate outfalls for illicit discharges.	Document location, number and types of samples taken, date, cause, and resolution.	Ongoing	Ongoing	X	X	X
	Respond to Illegal Dumps	Clean up illegal dumps.	Track number of illegal dumps, citations issued, and resolution.	Ongoing	Ongoing	X	X	X
	Respond to Illicit Discharges/Spills	Fire Department spill response.	Track date and cause of spills that occur. Document whether the spill reached the stormwater system or a stream and if water sampling was conducted. Document response resolution.	Ongoing	Ongoing	X	X	X
		Public Works illicit discharge/spill response.	Track date and cause of illicit discharges/spills that occur, identified illicit discharges from private wastewater laterals or from failing public infrastructure. Document whether the pollutant reached the stormwater system or a stream and if water sampling was conducted. Document response resolution.	Ongoing	Ongoing	X	X	X

Best Management Practice	Strategy	Measureable Goal	Performance Measure	Expected Implementation Timeline	2019 Status	Pollutants		
						Mercury	Bacteria	Temperature
		Provide spill response cards and spill response kits on municipal trucks and sweepers.	Track number of municipal trucks and sweepers with spill response cards and spill kits. Document the number of spill kits used annually in response to spills.	Ongoing	Ongoing	X	X	X
ID-3 Hazardous Waste Collection	Provide Opportunity for Residents to Dispose of Hazardous Waste	Offer free hazardous waste collection service twice per year to City residents.	Track volume of waste received during collection events.	Ongoing	Ongoing	X	X	X
ID-4 Drug Take-Back Collection	Provide Opportunity for Residents to Dispose of Unused Medication	Offer free unused medication collection service to City residents.	Track the volume of unused medication collected annually.	Ongoing	Ongoing	X	X	X
Measure 4 – Construction Site Stormwater Runoff Control								
CS-1 Train Staff in Erosion and Sediment Control (ESC)	Train Staff in Plan Review, Site Inspection, and Enforcement of ESC Program	Train new staff whose responsibilities include erosion and sediment control plan review and enforcement. Provide refresher training to all staff involved in ESC every three years.	Document number of staff trained and type of training (on-the-job training, certification, or recertification).	Ongoing	Ongoing	X	X	X
CS-2 Implement Erosion and Sediment Control Program	Implement ESC Program	Conduct ESC plan review.	Document location and type (commercial, industrial, single-family residential, etc.) of all construction project plan reviews. Document which project obtained a DEQ 1200-C permit. Develop and send a notice letter to applicants on wet weather best management practices as weather conditions change.	Ongoing	Ongoing	X	X	X
		Conduct site inspections at least once during active construction by trained or experienced staff.	Provide number of erosion and sedimentation control inspections for each project. Document location and type (commercial, industrial, single-family residential, etc.) of construction project.	Ongoing	Ongoing	X	X	X
		Enforce ESC ordinances.	Report number of warning letters or non-compliance citations by project and resolution.	Ongoing	Ongoing	X	X	X
Measure No. 5 – Post-Construction Runoff Control								
DS-1 Develop Stormwater Management Program	Update Stormwater Development Manuals and Standard Details	Update stormwater design standards manual and standard drawings. Notify development community of proposed new requirements before adoption.	Provide summary of changes and link to new design standards when adopted.	~~December 2019~~ **December 2020 – Adaptive Management (Standard Drawing Updates)**; December 2020	Incomplete, But Started	X	X	X

Best Management Practice	Strategy	Measureable Goal	Performance Measure	Expected Implementation Timeline	2019 Status	Pollutants		
						Mercury	Bacteria	Temperature
				(Standard Manual Amendments)				
DS-2 Train Staff in Stormwater Management	Train Staff in Stormwater Management	Provide training opportunities for staff in watershed and stormwater management.	Track type of training (webcast, class, on-the-job, certification, etc.), number of employees trained, and the training subject (plan review, inspection, enforcement, etc.)	Ongoing	Ongoing	X	X	X
DS-3 Implement Stormwater Management Program	Require Stormwater Management for Development and Redevelopment	Require stormwater plan submittals and conduct plan reviews.	Document number of construction plan submittals, plan reviews, project type (commercial, institutional, residential, etc.), size, and location.	Ongoing	Ongoing	X	X	X
		Require stormwater management per the Stormwater Development Manuals and Standard Details.	Document number and type (detention basin, flow dissipater, raingarden, filtration swale, etc.) of stormwater facilities required for each project.	Ongoing	Ongoing	X	X	X
		Conduct pre-construction conferences to inform contractors about stormwater requirements.	Document number of pre-construction conferences, project type (commercial, institutional, residential, etc.), size, and location.	Ongoing	Ongoing	X	X	X
	Improve Watershed Management	Evaluate stormwater projects for treatment opportunities (new installations vs. existing infrastructure upgrades) i.e. Stormwater Master Plan.	Summarize hierarchy used for screening. Document location and number of sites reviewed, drainage area, and result of evaluation.	May 2014, and Ongoing; June 2020 (Re-evaluate Stormwater Master Plan project list)	Ongoing	X	X	X
		Implement stormwater projects for treatment opportunities (new installations vs. existing infrastructure upgrades) i.e. Stormwater Master Plan.	Document number of projects including location, size, type (LIDA, traditional, etc.), and drainage area.	May 2014, and Ongoing; June 2020	Ongoing	X	X	X
	Optimize Water Quality	Inspect public stormwater facilities post-construction.	Conduct a post-construction stormwater facility transfer. Complete final inspection at end of the two-year maintenance agreement. Document facility in GIS/asset management program, obtain and file stormwater as-built drawings, and facility maintenance plan.	Ongoing	Ongoing	X	X	X
Measure No. 6 – Pollution Prevention in Municipal Operations								
OM-1 Operations and Maintenance (O&M) Manual	Update O&M Policies	Review existing O&M practices.	Document current procedures in an O&M manual.	December 2018	Completed	X	X	X
		Update O&M manual to optimize water quality.	Document modifications to manual.	December 2022	Not started	X	X	X
	Update Infrastructure Procedures	Review and evaluate the need to update the catch basin cleaning program.	Document current procedures and any modifications to optimize water quality.	~~July 2019~~ **July 2020 – Adaptive Management**	Incomplete, But Started	X	X	X

Best Management Practice	Strategy	Measureable Goal	Performance Measure	Expected Implementation Timeline	2019 Status	Pollutants		
						Mercury	Bacteria	Temperature
		Implement revised catch basin cleaning program.	Track progress.	Ongoing	Ongoing	X	X	X
	Update Street Sweeping Procedures	Review and evaluate the need to update the street sweeping program.	Document current procedures and any modifications to optimize water quality	July 2020	Not Started	X	X	X
		Implement revised street sweeping program.	Track progress.	Ongoing	Ongoing	X	X	X
OM-2 Operations and Maintenance Training	Train staff in infrastructure and street sweeping procedures that optimize water quality	Train new staff in stormwater maintenance duties in O&M procedures manual.	Track type of training (webcast, class, certification, on-the-job, etc.), number of employees trained, and the training subject (inspections, maintenance, repair, construction, etc.)	Ongoing	Ongoing	X	X	X
		Train all staff in revised O&M procedures manual every three years.	Track type of training (webcast, class, certification, on-the-job, etc.), number of employees trained, and the training subject (inspections, maintenance, repair, construction, etc.)	February 2019 (following manual completion, then every three years); August 2022	Ongoing	X	X	X
OM-3 Stormwater Infrastructure Maintenance	Maintain stormwater infrastructure	Clean catch basins.	Track number of catch basins cleaned per year.	Ongoing	Ongoing	X	X	X
		Place trash racks over major inlets.	Track number and percentage of major inlets installed with trash racks.	Ongoing	Ongoing	X	X	X
		Inspect, clean, repair, replace, and install stormline.	Track length of stormline inspected. Document length of stormline cleaned. Document length and location of stormline repaired or replaced. Track length, diameter and location of stormline installed.	Ongoing	Ongoing	X	X	X
		Inspect, repair, and replace culverts.	Document location of repaired and replaced culverts and reason for repair or replacement. For newly installed culverts, document new culvert size, material, and elevation from culvert bottom to stream bottom.	Ongoing	Ongoing	X	X	X
		Inspect and repair public stormwater facilities.	Document number of inspections, type of facility (detention basin, LIDA facilities, vegetated swale, etc.) and whether facilities were categorized as excellent, fair, or poor condition.	Ongoing	Ongoing	X	X	X
		Sweep streets every 4-6 weeks.	Track curb miles swept and debris collected per curb mile each year. Document disposal method.	Ongoing	Ongoing	X	X	X
Temperature								
	Use Municipal Code and other Measures	Update Municipal Code that can affect stream health.	Update ordinances that affect stream vegetation.	Ongoing	Ongoing	X	X	X

Best Management Practice	Strategy	Measureable Goal	Performance Measure	Expected Implementation Timeline	2019 Status	Pollutants		
						Mercury	Bacteria	Temperature
T-1 Maintain Existing Stream Vegetation	to Maintain Stream Vegetation	Update Stream Corridor Overlay.	Document changes to the Stream Corridor Overlay map and code based on wetland inventory and property annexation.	Ongoing	Ongoing	X	X	X
T-2 Increase Effective Shade	Increase Shade along Streams within the City	Continue with established Trees for Streams Program. Provide incentives (free or reduce cost native plant materials) for citizens to plant trees, shrubs, and grasses along tributaries or streams within the City limits.	Document watershed and number of native plant types (trees, shrubs, grasses) planted per year.	Ongoing	Ongoing	X	X	X
T-3 Stream Assessment	Assess Stream Health and Canopy Coverage	Assess at least one stream mile annually for vegetative ground cover, stream channel configuration, and canopy coverage.	Document results of assessment.	Ongoing	Ongoing	X	X	X
		Complete a wetland inventory that encompasses the Urban Reserve areas. Update wetland inventory when Department of Land Conservation and Development (DLCD) provides funding for City's comprehensive plan periodic review.	Track progress. Provide link to wetland inventory and map.	Ongoing	Ongoing	X	X	X
		Develop stream temperature monitoring program.	Document procedures and identify locations for sampling.	Completed December 2019	Completed	X	X	X
		Implement stream temperature monitoring program.	Document sampling locations, dates, and results.	May 2020, and Ongoing	Not Started	X	X	X

Appendix B: Illicit Discharge Investigations 2018-2022

Appendix B: Illicit Discharge Investigations 2018-2022

Date	Cause	Watershed	Water Samples	Resolution
1/2018	Concern about an existing oil-water separator and petroleum releasing to a storm drain ditch.	Chehalem Creek	0	A DEQ Hazardous Waste coordinator come out on site and did a field investigation. It was determined that the oil-water separator was in good working order, but there were other site conditions that need to be corrected. A Complaint Investigation #18-141 letter was sent to the owner.
1/2019	A motor vehicle spilling/leaking oil drove through the gas station parking lot and covered the area with an oil sheen.	Chehalem Creek	0	The City of Newberg maintenance crew deployed absorbent socks around the nearby catch basins. No additional action was taken.
4/2019	Dumping of floor wax and stripping compound into the storm drain in a private parking lot. Private storm drain connects to public storm drain along E 2nd Street and illicit discharge was found flowing along the curb line.	Chehalem Creek	0	The City of Newberg maintenance staff cleaned the illicit discharge from the catch basin and gutter line along E 2nd Street. They also flushed the private catch basin in parking lot in order to access all of the dumped material with the City's vactor truck. A Notice of Municipal Code Violation was sent to the Contractor responsible for the illicit discharge and a fine of $400.45 covering the clean-up cost was assessed and then paid.
6/2019	Restaurant was improperly disposing of grease. Grease containers by the dumpster were improperly maintained and grease on ground was being washed into private onsite storm drain.	Spring Brook	0	The City of Newberg is still actively working with this restaurant. Contact began with outreach and education and has escalated to imposing fines for continued violations of improperly maintained grease disposal methods.
7/2019	Anonymous DEQ Complaint 19-1678: Employee dumping windshield washing fluid into a private onsite catch basin at a gas station at the end of their work day.	Spring Brook	0	The City of Newberg made contact with the manager of the gas station and provided education about proper disposal methods and how to avoid illicit discharges. Verbal warning.

7/2019	Restaurant was pouring mop water into a private onsite storm drain.	Spring Brook	0	The City of Newberg made contact with employees and owner. Through education and outreach they were informed that mop water needs to go into the mop sink only and that dumping in the storm drain is an illicit discharge. Verbal warning.
10/2019	Phone call from public about diesel fuel spill running into storm drain in the Terra Estates Subdivision	Chehalem Creek	0	The City of Newberg received a phone call from a concerned citizen about a fuel spill. Maintenance employees determined the spill was minor and deployed two absorbent bags to soak up the spilled fuel.
10/2019	A medical office building was under construction when a sewer manhole was pumped into a private stormwater detention basin/drainage system.	Spring Brook	0	The City of Newberg was made aware of this violation and had the contractor stop immediately. An OERS report was filed: OERS 2019-2800. The contractor was assessed and then paid the City fine of $1,000. DEQ will be following up with any state enforcement action.
10/2019	Grocery store was improperly maintaining their grease disposal container and grease was flowing into private stormwater drain.	Spring Brook	0	The City of Newberg made contact with the store manager. Through education and outreach they were made aware of proper care of grease containers and the spilled grease was cleaned from the pavement leading to the storm drain. Verbal warning.

Appendix C: Construction Site Stormwater Management 2018-2022

Appendix C: Construction Site Stormwater Management 2018-2022

Project Name	Location	Watershed	1200-C Permit (Yes/No)	ESC Inspections					Completed
				2018	2019	2020	2021	2022	
Gracie's Landing, Ph 1	North Valley Rd/Chehalem Dr	Chehalem Creek	Yes	NA	-	-	-	-	2018
Gracie's Landing, Ph 2 & 3	North Valley Rd/Chehalem Dr	Chehalem Creek	Yes	NA	-	-	-	-	2018
Chehalem Pointe Apartments	1317 Villa Rd	Hess Creek	Yes	NA	-	-	-	-	2018
CPRD Pool Expansion	1802 Haworth Ave	Hess Creek	Yes	NA	-	-	-	-	2018
Freeman Manufacturing Building	1001 Wilsonville Rd	Hess Creek	Yes	NA	-	-	-	-	2018
GFU Student Activity Center	1400 E Sherman St	Hess Creek	Yes	NA	-	-	-	-	2018
GFU Austin Sports Complex	1953 N Center St	Hess Creek	Yes	NA	-	-	-	-	2018
Grace Baptist Church	1619 E 2nd St	Hess Creek	Yes	NA	-	-	-	-	2018
Hazelwood Farms	E Henry Rd	Hess Creek	Yes	NA	-	-	-	-	2018
Villa Rd Improvements	Villa Rd	Hess Creek	Yes	NA	-	-	-	-	2018
Dayton Avenue Pump Station	840 S Dayton Ave	Chehalem Creek	No	144	-	-	-	-	2018
Old Mill Development	2401 Portland Rd	Hess Creek	No	30	-	-	-	-	2018
South Park	609 Wynooski St	Hess Creek	Yes	NA	-	-	-	-	2018
Dutchman Ridge, Ph 1	25300 NE North Valley Rd	Chehalem Creek	Yes	NA	NA	-	-	-	2019
Page Landing	400 E Columbia Dr	Chehalem Creek	Yes	NA	NA	-	-	-	2019
Airport Commercial Building	1000 S Commerce Pkwy	Hess Creek	No	1	2	-	-	-	Under Construction
GFU Edwards Hall	617 N Villa Rd	Hess Creek	Yes	NA	NA	-	-	-	2019
McCann Apartments	800 E 2nd St	Hess Creek	No	1	27	-	-	-	Under Construction
Harding School	601 Wynooski St	Hess Creek	Yes	NA	NA	-	-	-	Under Construction
Providence Medical Office Building	1001 Providence Dr	Spring Brook	Yes	NA	NA	-	-	-	2019
CPRD Friends Park	1800 N Kennedy Dr	Hess Creek	Yes	-	NA				Under Construction
GFU Health Occupations Building	879 N Providence Dr	Spring Brook	Yes	-	NA				Under Construction
Dutchman Ridge, Ph 2	25300 NE North Valley Rd	Chehalem Creek	Yes	-	NA				Under Construction

King's Landing, Ph 1, 2, 3	25020 NE North Valley Road	Chehalem Creek	Yes	-	NA				Under Construction
Riverrun, Ph 1, 2	101 W Weatherly Way	Hess Creek	Yes	-	NA				Under Construction
Hancock Commons	200 E Hancock Street	Chehalem Creek	No	-	13				Under Construction

Under Construction: The public improvement permit is still active and has not yet been closed out.

Appendix D: Post-Construction Stormwater Management 2018-2022

Appendix D: Post-Construction Stormwater Management 2018-2022

Project Name	Location	Acres	Project Type-Zoning	Pre-Construction Meeting	Project	Stormwater Facility	Completed
Freeman Manufacturing Building	1001 Wilsonville Rd	2.04 (1200-C)	Commercial	No	Commercial Building	3 public stormwater planters, 3 private flow through planters, private Contech underground detention	2018
Chehalem Pointe Apartments	1317 Villa Rd	5.8 (1200-C)	Residential	Yes	Apartment Complex	2 public stormwater planters, detention pond, underground detention	2018
Page Landing	400 E Columbia Dr	3.19 (1200-C)	Residential	Yes	25 Lot Subdivision	1 detention pond	2018
South Park	609 Wynooski St	1.21 (1200-C)	Residential	No	13 Lot Subdivision	None required. No new impervious surface areas.	2018
1002 S Pacific Partition	1002 S Pacific St	0.16	Residential	No	Partition	1 raingarden	2018
Gracie's Landing, Ph 1	North Valley Rd/Chehalem Dr	10.6 (1200-C)	Residential	Yes	24-lot Subdivision	Detention pond, water quality swale	2018
Gracie's Landing, Ph 2 & 3	North Valley Rd/Chehalem Dr	See Gracie's Ph 1 1200-C permit	Residential	No	29-lot Subdivision	Detention pond, water quality swale	2018
CPRD Pool Expansion	1802 Haworth Ave	5.1 (1200-C)	Residential	Yes	Recreation Facility	Private detention facilities, public stormwater planter	2018
GFU Student Activity Center	1400 E Sherman St	2.4 (1200-C)	Institutional	Yes	Activity Center	1 detention pond, stormwater planters	2018
GFU Austin Sports Complex	1953 N Center St	3.8 (1200-C)	Institutional	Yes	Sports Complex	Vegetated strips, vegetated swales	2018
Grace Baptist Church	1619 E 2nd St	3.0 (1200-C)	Residential	No	Church Expansion	None required. No new impervious surface areas.	2018
Hazelwood Farms	E Henry Rd	4.9 (1200-C)	Residential	No	19-lot Subdivision	Detention pond	2018
Villa Rd Improvements	Villa Rd	(1200-C)	NA	Yes	Roadway Improvement	Stormwater planters, detention pond, underground detention	2018

Project Name	Location	Acres	Project Type-Zoning	Pre-Construction Meeting	Project	Stormwater Facility	Completed
Dayton Avenue Pump Station	840 S Dayton Ave	0.28	Public Facility	Yes	Pump Station	Detention pond	2018
Shelly Cate Partition	1305 Newall Rd	0.38	Residential	No	Partition	1 raingarden	2019
GFU Edwards Hall	617 N Villa Rd	6.6 (1200-C)	Institutional	No	Residence Hall	Vegetated water quality/detention basin	2019
Providence Medical Office Building	1001 Providence Dr	5.10 (1200-C)	Institutional	Yes	Medical Office Building	6 private water quality facilities, 2 underground detention tanks, and flow control manholes	2019
Harding School	601 Wynooski St	0.77	Residential	Yes	Multi-family residential and 5 single-family lots	5 public stormwater planters, and 3 private raingardens	Under Construction
Dutchman Ridge, Ph 1	25300 NE North Valley Rd	13.3 (1200-C)	Residential	Yes	35-lot Subdivision	1 detention pond	2019
Airport Commercial Building	1000 S Commerce Pkwy	0.5	Light Industrial	No	Commercial Building	Detention Pond	Under Construction
McCann Apartments	800 S 2nd St	0.31	Commercial	No	Apartment Complex	None required. No new impervious surface areas.	Under Construction
CPRD Friends Park	1800 Kennedy Dr	9.0 (1200-C)	Open Space	Yes	Park	Vegetated filter strip (for pathway)	Under Construction
GFU Health Occupations Building	879 N Providence Dr	1.53 (1200-C)	Residential-Professional	Yes	Medical Office Building	6 flow through rain garden	Under Construction
Dutchman Ridge, Ph 2	25300 NE North Valley Rd	13.3 (1200-C)	Residential	Yes	35-lot Subdivision	Note: Detention pond constructed in Ph 1.	Under Construction
King's Landing Ph 1-3	25020 NE North Valley Rd	15.4 (1200-C)	Residential	Yes	76-lot Subdivision	2 regional stormwater ponds	Under Construction

Riverrun, Ph 1 & 2	101 Weatherly Wy	7.24 (1200-C)	Residential	Yes	91-lot Subdivision	1 regional stormwater pond; serves all homes north of Weatherly Wy	Under Construction
Hancock Commons	200 E Hancock St	0.13	Commercial	Yes	Commercial Building/Residential Units	1 infiltration planter	Under Construction
Single Family Home	207 W Fourth Street	0.08	Residential	No	Residential Home	1 raingarden	2019
Single Family Home	809 S Willamette St	0.08	Residential	No	Residential Home	1 raingarden	2019
Single Family Home	811 S Willamette St	0.08	Residential	No	Residential Home	1 raingarden	2019

Appendix E: 2018 TMDL Accomplishments

Appendix E: 2018 TMDL Accomplishments

Measure No. 1 – Public Education

PE-1 Stormwater Education (Ongoing)

The Stormwater Education best management practice consists of three strategies; Website Education, Citizen Group Education, and the Water Quality Report.

Website Education (Ongoing)

The City has 16 web pages related to stormwater covering information on erosion and sedimentation control, riparian vegetation, water quality, illicit discharge, public works standards, and the Total Maximum Daily Load (TMDL) program.

The City posted on social media via the City of Newberg and Public Works Department Facebook pages 44 times about stormwater activities including the Trees for Streams program, illicit discharge, compost, waste management hazardous materials collections, rate review committee, and volunteer events.

The annual TMDL report is uploaded each year to the City's website after receiving and incorporating comments from DEQ.

Citizen Group Education (Ongoing)

In March 2018, City staff met with the Friendsview Hess Creek Canyon Committee (retirement community group) to evaluate vegetative coverage and the stream channel at their property on Fulton Street. Representatives from the Yamhill Soil and Water Conservation District and George Fox University were also onsite for the meeting and site walk. It was determined that some incising of the creek and erosion along the banks was occurring. It was acknowledged that residents were doing a good job of removing invasive plants and now needed to turn their focus toward replanting. Follow-up site preparation occurred as part of the George Fox Serve Day in September 2018, and a follow-up planting event occurred in early-February 2019 in coordination with the Greater Yamhill Watershed Council.

Leadership Newberg attended a presentation at the Newberg Wastewater Treatment Plant in March 2018 to learn about City programs such as volunteer opportunities, the Trees for Streams program, the watershed grant, the fats, oils, and grease (FOG) program, and City created compost. Participants were also given a tour of the waste water treatment plant and its composting facilities.

In June 2018, the City held the annual Public Works Day event in the park across from the Chehalem Cultural Center. The Engineering Department provided stormwater education as part of the event by using a casting of the City's stormwater manhole lid to stamp T-shirts for attendees. In total, 200 t-shirts were stamped and the message "Dump No Waste, Drains to Stream" can now be spotted walking around town. We received really positive feedback about this activity and plan to do it again in the future. See Figures 1 and 2 for images from the event.

Figure 1: Stamping T-shirts with City's Stormwater Manhole Graphic

Figure 2: Stamped T-shirts Drying Before Pick-up

Water Quality Report (Ongoing)

The Environmental Protection Agency (EPA) and the State of Oregon require the City of Newberg to distribute a Water Quality Report each year to all residences. The majority of information in the report is required by the EPA and the report is mailed to residents by June 30th each year. The 2017 Water Quality Report was mailed out in June 2018 and can be found on the City's website here: https://www.newbergoregon.gov/operations/page/water-quality-report

The report included the following TMDL related messages:

- Citizen Rate Review Committee (PI-1 Stormwater Utility Fee)
- City's Watershed Grant (PI-2 Public Participation in Stormwater Management)
- Illicit Discharge (Measure No. 3 – Illicit Discharge Detection and Elimination)
- Watershed Volunteer opportunities (PE-1 Citizen Group Education)
- Hazardous Waste Collection resources (ID-3 Hazardous Waste Collection)

PE-2 Watershed Education (Ongoing/Not Completed)

The Watershed Education best management practice consists of two strategies; Public Signage and Student Education.

Public Signage (Ongoing/Not Completed)

The Public Signage strategy consists of three measureable goals.

Develop a Public Infrastructure Signage Program (Not Started)

This work has not yet been started, the expected implementation timeline is December 2020.

Provide Signage at Stream Crossings or LIDA Infrastructure Facilities (Not Started)

This work has not yet been started, the expected implementation timeline is December 2022.

Marking 50 Unmarked Catch Basins a Year with "No Dumping, Drains to Stream" Language (Ongoing)

The City installed 50 bi-lingual "No Dumping, Drains to Creek" catch basin markers in November 2018. Catch basins near the Terra Estates neighborhood in the northwest corner of the City were marked. The approximate boundary for the catch basins marked includes N Terrance Drive, Jones Street, Taylor Drive, and E Foothills Drive.

The City is in the process of implementing Cartegraph OMS, a new software operations management system. The City's Maintenance division began implementing the software program in late-2018, which is being used to manage infrastructure maintenance, resource tracking, request management, data collection and analysis. Each public works maintenance staff member has an OMS tablet that can be used to intersect with the City's GIS information to access different assets and keep track of maintenance activities. The analysis tools within the software allow for better evaluation of the effectiveness of maintenance activities and ensure that assets throughout the City are being adequately inspected and maintained. As staff members become more adept within the system, it's anticipated that annual TMDL reporting

should become more simplified on several fronts. The catch basins marked in 2018 have been noted in the Cartegraph OMS system.

Student Education (Ongoing)

In 2018 the City sponsored two Mad Science presentations. The first presentation occurred in April and was given to 250 student's kindergarten through second grade at Antonia Crater Elementary. The second presentation occurred in May and was given to 110 students in the first and second grades at Joan Austin Elementary.

In March 2018, City staff gave two (2) separate presentations to Environmental Science students at George Fox University in coordination with the Greater Yamhill Watershed Council. Topics discussed included the City's TMDL Plan, Water Management & Conservation Plan, Stream Corridor Overlay zone in the Municipal Code, Public Works Design and Construction Standards, Stormwater Master Plan, 1200-C Permits, and Stormwater Maintenance.

In July 2018, City staff gave a presentation as part of the "STEAM: Creators at Lunch" series in coordination with the Newberg Library and the National School Lunch Program. Staff gave a presentation about the City's three watersheds (Chehalem Creek, Hess Creek, and Springbrook) and how watersheds in general can be affected by erosion, pollutants, and dense urban housing. In total, approximately 35 children and 20 adults participated in the "crumpled paper as a watershed" activity and everyone took home their watershed art project with information about what watershed they live in within the City.

In December 2018, the Newberg SAIL (Support, Advocacy for Independence in Life) Program visited the City of Newberg. Eighteen students and six supporting staff members received a tour of the Maintenance Yard and learned about our City's watershed and water conservation efforts. The group then supported the Engineering Division by helping to construct Water Conservation Kits using what they learned about water conservation.

Measure No. 2 – Public Involvement

PI-1 Stormwater Utility Fee (Ongoing)

The Citizen's Rate Review Committee (CRRC) was started in 1992 and consists of volunteers from the public who meet every two years to review utility rates proposed by staff. After a discussion with the committee, the rates are presented by staff to the City Council for approval. New stormwater related rates were adopted on April 1, 2018 and can be seen below in

Table *1*.

Table 1: Stormwater Utility Fee adopted April 1, 2018

Municipal Services Statement Fees – Stormwater Service Charges	
Service Charge ($/month)	$10.30
Storm System Development Fee*	
Single Family – Equivalent Dwelling Unit (EDU)	$358.64 flat fee
Other than Single Family	(Impervious Area/2877) x $358.64

*Revenues are used to maintain the City's Stormwater System. This fee is collected for each new development that connects to or otherwise uses the City's stormwater system and is determined by the square feet of impervious area. Impervious surface is the hard surface area which either prevents or retards entry of water into the soil mantel and/or causes water to run off the surface in greater quantities or at an increased rate of flow from that present under natural conditions. Impervious surface areas include, but are not limited to, rooftops, concrete or asphalt paving, walkways, patios, driveways, parking lots or storage areas and trafficked gravel or other surfaces which impede the natural infiltration or runoff of surface water. An equivalent dwelling unit (EDU) is equal to 2,877 square feet of impervious area.

PI-2 Public Participation in Stormwater Management (Ongoing)

In 2018, the City of Newberg provide $630 dollars from the Watershed Grant Program to the Newberg School District for stormwater education modules at Antonia Crater Elementary and Joan Austin Elementary. At Antonia Crater Elementary, 250 students in grades kindergarten through second enjoyed the "Where's the Water, Watson?" show, and at Joan Austin Elementary 110 students in first and second grades also enjoyed the "Where's the Water, Watson?" show.

The City is in the process of revising the grant forms and selection criteria and will be making an effort in 2019 to do more public outreach about the Watershed Grant Program.

PI-3 Public Participation in Reporting Stormwater Issues (Ongoing)

The Public Participation in Reporting Stormwater Issues best management practice consists of two measureable goals.

Provide Methods for Citizens to Report Stormwater Concerns (Ongoing)

In 2018, the City used its website to provide a phone number for the public to call about stormwater issues/concerns.

Respond to Public Concerns (Ongoing)

The City categorizes concerns into four main categories which include illicit discharge, erosion control, flooding, and illegal dumping. Totals for each type of concern received in 2018 can be found in Table 2 and are inclusive of concerns received by both the maintenance division and

code enforcement. More information concerning incident resolution for illicit discharge concerns can be found in Appendix B.

Table 2: 2018 Stormwater Concerns Received from the Public

Types of Concerns	Number of Concerns Received					Total
	2018	2019	2020	2021	2022	
Illicit Discharge	1	-	-	-	-	1
Erosion Control	1	-	-	-	-	1
Flooding	7	-	-	-	-	7
Illegal Dumping	0	-	-	-	-	0

PI-4 Public Participation in Determining Stormwater Educational Focus (Incomplete, But Started)

This best management practice is scheduled for completion in June/July 2019. A draft set of survey questions has been prepared based on research done about different stormwater surveys completed by other public agencies. The survey question have not yet been reviewed by management staff which will need to occur prior to issuing the survey to the public.

Measure No. 3 – Illicit Discharge Detection and Elimination (IDDE)

ID-1 Train Staff in Illicit Discharge Investigation and Spill Response (Ongoing)

Staff training on illicit discharge was done using the Excal Visual training video "*A Grate Concern: Illicit Discharge Detection & Elimination.*" The engineering division (six staff members) watched the video and had a discussion on illicit discharge and spill response in January 2018, and the maintenance division managers (five staff members) watched the video and had a discussion on illicit discharge and spill response in February 2018.

ID-2 Implement IDDE Plan (Ongoing)

The Implementation of the IDDE Plan consists of three strategies and six measurable goals.

Conduct Illicit Discharge Inspections (Ongoing)

The strategy for conducting illicit discharge inspections consists of two measurable goals.

Fieldscreen Outfalls (Ongoing)

The City screens outfalls during stormwater system maintenance and stream assessments. As maintenance performs work throughout the system, requests are made to the GIS department to update asset maps.

Additionally, the City did a field walk/investigation of one stream mile on Hess Creek in September 2018. During this field walk, outfalls were observed. No observations were made during the field walk/investigation that resulted in updates to the City's asset management system.

Investigate Outfalls for Illicit Discharges (Ongoing)

There were no events in 2018 that warranted samples being taken at an outfall location as a result of a known or suspected illicit discharge.

As part of the City's Stormwater Credit Program, one participant does perform its own sample testing at discharge locations. These records are kept by the applicant and they coordinate directly with DEQ to meet requirements of their 1200-Z permit.

Respond to Illegal Dumps (Ongoing)

The City of Newberg had no reported or identified illegal dumps in 2018.

Respond to Illicit Discharges/Spills (Ongoing)

The strategy for responding to illicit discharges/spills consists of three measurable goals.

Fire Department Spill Response (Ongoing)

The Fire Department, Tualatin Valley Fire & Rescue (TVF&R) responded to eight (8) "spill" incidents in 2018. In all cases the spills were either absorbed or contained and oils/petroleum were prevented from entering storm drains.

Public Works Illicit Discharge/Spill Response (Ongoing)

Public Works Maintenance Division did not respond to any spills within the City in 2018. However, they did identify an illicit discharge which was then coordinated with DEQ for further investigation (Appendix B).

Spill Response Cards/Kits on Municipal Trucks and Sweepers (Ongoing)

The City of Newberg has PIG® Truck Spill Kits available on ten (10) public works vehicles. Maintenance staff are made aware of these spill kits and the associated instruction manual.

ID-3 Hazardous Waste Collection (Ongoing)

Yamhill County Solid Waste (YCSW) continues to sponsor hazardous waste collection events for Newberg in May and for McMinnville in October. Both events are open to all Yamhill County residents and it is an opportunity for residents to safely dispose of hazardous items for free. Annual totals from the hazardous waste collection events can be seen in

Table *3*.

Table 3: Yamhill County Solid Waste: Hazardous Waste Collection Events Summary

Year	City of Newberg Event (May)			City of McMinnville Event (October)		
	Hazardous Waste (pounds)	Paint (pounds)	Medications (pounds)	Hazardous Waste (pounds)	Paint (pounds)	Medications (pounds)
2018	32,697	22,500	36.3	31,679	9,500	480
2019	-	-	-	-	-	-
2020	-	-	-	-	-	-
2021	-	-	-	-	-	-
2022	-	-	-	-	-	-
Total	32,697	22,500	36.3	31,679	9,500	480

ID-4 Drug Take-Back Collection (Ongoing)

The City of Newberg has a Medication Disposal Site which is located inside the lobby of the City's Public Safety Building. The safe drop box is for the public to dispose of unneeded or expired medications. Over the counter and pet medications are also accepted at the drop box location. Medications collected are incinerated so they don't end up in the garbage or flushed down the drain, avoiding contamination of soil and drinking water. Annual totals from the Medication Take-Back Program can be seen in Table 4.

Table 4: City of Newberg Medication Take-Back Program Summary

Year	Medication Collected (pounds)
2018	887.5
2019	-
2020	-
2021	-
2022	-
Total	887.5

Measure No. 4 – Construction Site Stormwater Runoff Control

CS-1 Train Staff in Erosion and Sediment Control (Ongoing)

Each department or division within the City is responsible for their own employee training. No specific ESC training was attended in 2018, however the topic of ESC was discussed at several of the trainings noted in best management practice DS-2 Train Staff in Stormwater Management. One Engineering Division staff member is a Certified Erosion and Sedimentation Control Lead.

CS-2 Implement Erosion and Sediment Control Program (Ongoing)

The best management practice for implementing the ESC Program consists of three measureable goals.

Conduct ESC Plan Review (Ongoing)

Erosion and Sediment Control plans reviewed for major projects are listed in Appendix C. Projects exceeding 1-acre are required to obtain DEQ 1200-C permits and are noted, inspections of these permits are conducted by DEQ. The City had four construction projects in 2018 that were more than a single-family home and less than 1-acre that required City issued Erosion and Sediment Control Permits (see Appendix C). The remainder of the City issued Erosion and Sediment Control Permits in 2018, were reviewed and issued for 54 single-family residential developments.

In 2018 staff gave verbal reminders to permit holders on the upcoming wet weather season and associated best management practices.

Conduct Site Inspections (Ongoing)

Staff reported that there were 54 single-family residential ESC permits with associated inspections in 2018 throughout the City of Newberg.

Enforce ECS Ordinances (Ongoing)

Staff reported no warning letters or non-compliance citations were issued in 2018.

Measure No. 5 – Post-Construction Runoff Control

DS-1 Develop Stormwater Management Program (Incomplete, But Started)

This best management practice includes updates to standard drawings in December 2019, and updates to the stormwater design standards in December 2020 (target dates). Based on both staff feedback and feedback from the construction community, updates are currently being made to the City's standard drawings to provide more clarity where necessary. It's anticipated that these changes should be finalized by December 2019.

DS-2 Train Staff in Stormwater Management (Ongoing)

Each department or division within the City is responsible for their employee training. The following trainings were attended in 2018:

- One Engineering Division staff member attended the TMDL designated management agency (DMA) meetings to learn from other DMA coordinators throughout the Willamette basin.
- Two Engineering Division staff members attended the Mid-Willamette Erosion Control and Stormwater Management Summit in January 2018.
- One Engineering Division staff member attended the ACWA Stormwater Summit in May 2018.
- One Engineering Division staff member attended the Pacific Northwest Clean Water Association (PNWCA) Annual Conference in October 2018.
- The Maintenance Division held a best management practice training for all staff members on LIDA facilities in February 2018.
- Five Maintenance Division staff members attended ODOT Short-School in March 2018, and two staff members attended training called "What Makes Emergency Response Successful?" which covered products for stormwater flooding and management in emergency events.

DS-3 Implement Stormwater Management Program (Ongoing)

The best management practice Implement Stormwater Management program consists of three strategies; Require Stormwater Management for Development and Redevelopment, Improve Watershed Management, and Optimize Water Quality.

Require Stormwater Management for Development and Redevelopment (Ongoing)

The strategy Require Stormwater Management for Development and Redevelopment consists of three measurable goals.

Require Stormwater Plan Submittals and Conduct Plan Reviews (Ongoing)

The City requires that all development/redevelopment projects that create a net new impervious surface area that exceeds 500 square feet of either public or private property must treat and detain stormwater.

The projects found in Appendix D represent construction plans received and reviewed for stormwater management in regards to development and redevelopment. The project type, size, and location are noted.

Additionally the Engineering Division participated in 45 pre-application meetings in 2018 where City stormwater requirements were discussed with applicants.

Require Stormwater Management per the Stormwater Development Manuals and Standard Details (Ongoing)

Appendix D notes the number and type of stormwater facilities constructed for each project that was either completed or started in 2018. Public stormwater facilities are then added to the City's GIS system once a development's as-builts are provided to the City.

Private stormwater facilities are required to have recorded Stormwater Maintenance Agreements with the City of Newberg which provide guidance on maintenance activities into perpetuity.

Conduct pre-construction conferences to inform contractors about stormwater requirements (Ongoing)

The City typically holds pre-construction conferences for all public improvement projects, and for larger private development projects within the City. Pre-construction meetings are noted in Appendix D. The City held eight pre-construction meetings for projects that were either completed or started in 2018.

Improvement Watershed Management (Ongoing)

The strategy Improve Watershed Management consists of two measureable goals.

Evaluate stormwater projects for new treatment opportunities

Each year the City establishes a 5-Year Capital Improvement Plan (CIP) that balances infrastructure needs based on a variety of sources including the Stormwater Master Plan, City Council goals, operational needs, and regulatory obligations.

The stormwater projects included in the fiscal year (FY) 2018-2019 project list include the following:

- **S. Blaine Street; Hancock to 11th Street** – Correct flooding problems and upgrade old pipe sections that no longer meet City standards (material type and sizing).
- **N. Elliot Road** – There is currently no storm drainage in N. Elliot Road resulting in frequent ponding alongside the roadway. This project would add an 18-inch storm pipe to the system as part of a larger roadway project.
- **N. Springbrook Road** – There are existing gaps in the public storm drainage system in N. Springbrook Road, improvements will be made as part of the larger street project.
- **800 Block of Wynooski Street** – Correct a current pipe and outfall that is eroding an area east of Wynooski Street.

These projects are scheduled to be constructed over the next 5-years and are consistent with the City's stormwater infrastructure needs. As projects move toward preliminary design, they will be reviewed for treatment opportunities based on the City's established stormwater facility hierarchy as noted in the Public Works Design and Construction Standards Section 4.6.8 Facility Selection Hierarchy.

Implement stormwater projects for treatment opportunities

The S. Blaine Street project is a very large undertaking as noted in the Stormwater Master Plan. The City has elected to break the project out into smaller segments due to funding constraints. The first two phases of construction are complete (from approximately 405 S Blaine Street

south to the tributary to Chehalem Creek) and the City is planning to construct the next phase in FY 2021/2022 (from approximately 405 S Blaine Street north to Hancock Street).

The 800 Block of Wynooski Street project was started in 2018 with the support of the George Fox University engineering program under the guidance of the City's Public Works Director. This project is in the engineering phase and is correcting erosion in the vicinity of Hess Creek.

Optimize Water Quality (Ongoing)

The City requires a two-year maintenance agreement for all private development of public stormwater facilities. As an example, if a subdivision is built and requires a detention pond to mitigate stormwater, the development enters into a two-year maintenance agreement with the City to maintain that stormwater facility through the establishment phase. When the two year maintenance agreement is coming to an end, a final inspection is scheduled and completed to allow for the developer to correct any problems before the stormwater facility becomes the responsibility of the City.

In 2018 the following stormwater facilities were transferred from the private maintenance agreements to public stormwater maintenance:

- Highlands at Hess Creek Phase 4 and 5 (Detention Pond)
- Columbia Estates (Detention Pond)
- Nova Grace (Detention Pond, Flow Dissipater)

These facilities have been added to the City's asset management program (both GIS and Cartegraph OMS), and as-builts are available for review through an internal staff portal.

Measure No. 6 – Pollution Prevention in Municipal Operations

OM-1 Operations and Maintenance Manual (Complete/Ongoing/Incomplete, But Started/Not Started)

The Operations and Maintenance Manual best management practice consists of three strategies; Update O&M Policies, Update Infrastructure Procedures, and Update Street Sweeping Procedures.

Update O&M Policies

The Update O&M Policies strategy consists of two measureable goals.

Review existing O&M practices (Completed)

The City developed an Operations and Maintenance Manual in 2018 to document current maintenance procedures as they relate to stormwater. The Manual was completed in early December and sent to DEQ on December 10, 2018. The Manual covers stormwater work flow, public participation in reporting stormwater issues, stormwater inspection and cleaning, stormwater repair and replacement, illicit discharge investigation and spill response, the catch basin cleaning program, the street sweeping program, and the newly deployed operations management program called Cartegraph OMS.

Update O&M manual to optimize water quality (Not Started)

The Operations and Maintenance Manual is scheduled to be reviewed and updated every three years. The manual is scheduled for a review and update in December 2022, and this work has not yet been started.

Update Infrastructure Procedures

The Update Infrastructure Procedures strategy consists of two measurable goals.

Review and evaluate the need to update the catch basin cleaning program (Incomplete, But Started)

As part of developing the Stormwater Operations and Maintenance Manual and the implementation of the City's new operations management program called Cartegraph OMS, the existing catch basin cleaning program was discussed. Attribute tables for catch basins inside of the Cartegraph OMS system were modified to capture the data most relevant to our maintenance division and to support reporting as part of the TMDL plan. This initial work will be reviewed and evaluated by July 2019 to determine if additional modifications need to be made.

Implement revised catch basin cleaning program (Ongoing)

The City continues to implement the existing catch basin cleaning program annually, and as the program is revised/updated in July 2019 will follow any modifications made. Information regarding catch basins cleaned annually can be found in section OM-3 Stormwater Infrastructure Maintenance.

Update Street Sweeping Procedures

The Update Street Sweeping Procedures strategy consists of two measurable goals.

Review and evaluate the need to update the street sweeping program (Not Started)

The City is scheduled to review and evaluate the need to update the street sweeping program in July 2020. As such, this task has not yet been started.

However, as of September 2018 the City is undertaking a pilot program to have a contractor support with street sweeping along OR99W between the western city limits and Villa Road. This work must be completed at night and put stress on City maintenance division employees who were switching back and forth between day shifts and night shifts. This pilot program is expected to last for an entire year and will be evaluated at the completion to determine if the City wants to continue with this service.

Implement revised street sweeping program (Ongoing)

The City continues to implement the existing street sweeping program annually, and as the program is revised/updated in July 2020 will follow any modifications made.

OM-2 Operations and Maintenance Training (Ongoing/Incomplete, But Started)

The Operations and Maintenance Training best management practice has one strategy which is to train staff in infrastructure and street sweeping procedures that optimize water quality. The strategy has two (2) measureable goals.

Train new staff in stormwater maintenance duties in O&M procedures manual (Ongoing)

The Maintenance Division proactively trains new employees on the day to day tasks associated with stormwater maintenance duties. Much of this training is "on-the-job" and is taught through the experience of completing tasks like cleaning catch basins or stormwater lines. Additionally the following training was attended by the Maintenance Division staff members:

- The Maintenance Division held a best management practice training for all staff members on LIDA facilities in February 2018.
- Five Maintenance Division staff members attended ODOT Short-School in March 2018, and two staff members attended training called "What Makes Emergency Response Successful?" which covered products for stormwater flooding and management in emergency events.

Train all staff in revised O&M procedures manual every three years (Incomplete, But Started)

The City developed an Operations and Maintenance Manual to document current maintenance procedures as they relate to stormwater. The Manual was completed in early December and sent to DEQ on December 10, 2018. A presentation of the manual to the entire Maintenance Division is currently being coordinated and is expected to be complete in March 2019. This presentation will then be given every three years in coordination with the manual update.

OM-3 Stormwater Infrastructure Maintenance (Ongoing)

The Stormwater Infrastructure Maintenance best management practice has one strategy which is to maintain stormwater infrastructure. The strategy has six (6) measurable goals.

Clean catch basins (Ongoing)

There were 75 catch basins/grates cleaned in 2018, as is shown in *Table 5*.

Place trash racks over major inlets (Ongoing)

There were no trash racks installed in 2018, as is shown in *Table 5*.

Inspect, clean, repair, replace, and install stormline (Ongoing)

The amounts of stormline inspected, cleaned, repaired, replaced, and installed in 2018 can be seen in *Table 5*. It should be noted that a migration between the old data collection system and the new Cartegraph OMS asset management system occurred in October 2018, there were problems with some of the old data migrating into the new software so the number presented may not fully represent all of the maintenance activities in 2018.

Inspect, repair, and replace culverts (Ongoing)

The amounts of culverts inspected, repaired, and replaced in 2018 can be seen in *Table 5*. It should be noted that a migration between the old data collection system and the new Cartegraph OMS asset management system occurred in October 2018, there were problems with some of the old data migrating into the new software so the number presented may not fully represent all of the maintenance activities in 2018.

Table 5: Stormwater Infrastructure Maintenance Activities from 2018 to 2022

Stormwater Maintenance Activity	2018	2019	2020	2021	2022
Catch Basin/Grates Cleaned	75	-	-	-	-
Trash Racks Installed	0	-	-	-	-
Stormline Inspected, feet	2,089	-	-	-	-
Stormline Cleaned, feet	4,390	-	-	-	-
Stormline Repaired, feet	0	-	-	-	-
Stormline Replaced, feet	0	-	-	-	-
Stormline Installed, feet*	0	-	-	-	-
Ditch Cleaned, feet	125	-	-	-	-
Culvert Inspected	0	-	-	-	-
Culvert Repaired	0	-	-	-	-
Culvert Replaced	0	-	-	-	-

*This value represents stormline installed by the City's Maintenance Division only, and is not inclusive of new development within the City.

Inspect and repair public stormwater facilities (Ongoing)

The City inspects and repairs public stormwater facilities on an annual basis, 2018 activities can be seen in *Table 6*. In 2018, visual inspections of public stormwater facilities including detention areas, spillways, and water quality swales was done in July 2018. Twenty six public stormwater facilities were visually inspected and rated.

Four facilities were identified in poor condition. The following facilities were cleaned and repaired as part of the George Fox University Serve Day in September 2018, where approximately 30 college students were broken into three groups and under the direction of staff in the Maintenance Division performed repairs.

- STS I0901 – N Springbrook Road north of Middle Brook Drive (Detention Area)
- STS G1103 – Renfro Way (Detention Area)
- STS J1202 – Worth Boulevard south side (Detention Area)
- STS G0801 – E Edgewood Dr east of N College St (Detention Area)

It should also be noted that the 12 LIDA facilities along N College Street were also cleaned by George Fox Students. These stormwater facilities were replanted in January 2018, and so students removed newly sprouted weeds and trash from those facilities as part of keeping them on track for new growth success.

Table 6: Stormwater Facility Activities from 2018-2022

Stormwater Facility Activities		2018	2019	2020	2021	2022
Total Facilities (Detention Areas, Spillways, and Water Quality Swales)		83	-	-	-	-
Inspections		26	-	-	-	-
Type	Detention Area	21	-	-	-	-
	Spillway	2	-	-	-	-
	Water Quality Swale	3	-	-	-	-
Condition	Excellent	4	-	-	-	-
	Fair	18	-	-	-	-
	Poor	4	-	-	-	-
Facility Repairs		4	-	-	-	-

Sweep streets every 4-6 weeks (Ongoing)

The City cleans streets on a 5-week rotation. In 2018, just over one thousand cubic yards of debris were removed while sweeping 3,808 curb miles. As has been noted previously, the City also has a pilot program underway which started in September 2018 where a contracted street sweeping company is sweeping OR99W from the western city limits to Villa Road. Information regarding the contracted street sweeping activities is included in *Table 7*.

Table 7: Street Sweeping Activities from 2018 to 2022

Street Sweeping Activities (Public and Private)	2018	2019	2020	2021	2022
Sweeping Debris (Cubic Yards)	1,009	-	-	-	-
Street Sweeping Miles	3,808	-	-	-	-
Cubic Yard per Mile Swept	0.26	-	-	-	-
Contracted Sweeping Debris (Cubic Yards)	95*	-	-	-	-
Contracted Street Sweeping Miles	64*	-	-	-	-
Contracted Cubic Yard per Mile Swept	1.5*	-	-	-	-

*A pilot program was started in September 2019 to have OR99W swept between the western city limits and Villa Road using a third party contractor. That section of OR99W is swept twice a month.

Temperature

T-1 Maintain Existing Stream Vegetation (Ongoing)

The best management practice Maintain Existing Stream Vegetation has one strategy which is to use the Municipal Code and other measures to maintain stream vegetation. The strategy has two (2) measureable goals.

Update Municipal Code that can affect stream health (Ongoing)

The City had no ordinances adopted in 2018 that would affect stream health.

Update Stream Corridor Overlay (Ongoing)

There were no code changes or map changes to the Stream Corridor Overlay in 2018.

T-2 Increase Shade along Streams within the City (Ongoing)

The City continues to promote and facilitate a Trees for Streams Program in coordination with the Northwest Oregon Restoration Partnership (NORP). Native plant materials are purchased at a reduced cost from NORP in exchange for City volunteer hours each year, in 2018 the City's plant invoice was $131.00. The City then provides native plant materials for free to interested property owners within the city limits whose properties abut Chehalem Creek, Hess Creek, Spring Brook or tributaries to these stream systems. This program gives the City an opportunity to build relationships with private land owners who own the majority of the property along the City's stream systems, and to stabilize stream temperatures within the City by increasing the amount of shade. Native plant materials provided to residents in 2018 can be seen in *Figure 3* and *Table 8*.

In 2018, two Newberg citizens participated in the Trees for Streams Program and both were located in the Chehalem Creek Watershed. These land owners planted natives along a total of 0.02 miles of stream/tributary and positively impacted a total of 0.29 riparian acres.

Figure 3: 2018 Plants received from NORP and distributed to Newberg Residents

Table 8: Trees for Streams Program Native Plant Totals from 2018 to 2022

	2018	2019	2020	2021	2022	Total
Chehalem Creek Watershed						
Trees	19	-	-	-	-	19
Shrubs	24	-	-	-	-	24
Groundcovers	5	-	-	-	-	5
Hess Creek Watershed						
Trees	5	-	-	-	-	5
Shrubs	12	-	-	-	-	12
Groundcovers	8	-	-	-	-	8
Spring Brook Watershed						
Trees	5	-	-	-	-	5
Shrubs	38	-	-	-	-	38
Groundcovers	0	-				0
Total	116	-	-	-	-	116

T-3 Stream Assessment (Ongoing/Incomplete, But Started/Not Started)

The best management practice Stream Assessment has one strategy to Assess Stream Health and Canopy Coverage. The strategy has four (4) measureable goals.

Assess at least one stream mile annually for vegetative ground cover, stream channel configuration, and canopy coverage (Ongoing)

In March 2018, the City assessed approximately 0.2 stream miles adjacent to the Friendsview Retirement Village between Fulton Street and the railroad along Hess Creek. This visit was done in coordination with George Fox University and the Yamhill County Soil and Water Conservation District to prepare for future restoration efforts (invasive removal, native plantings, and deer resistant tree protection) that occurred in September 2018 and in February 2019.

In September 2018, the City assessed approximately 1.2 stream miles of Hess Creek between OR99W/Hoover Park to the City's Waste Water Treatment Plant. This stream walk was done in coordination with the Maintenance Division and was used to evaluate both the stream corridor and the City's wastewater infrastructure which follows Hess Creek in this section.

In the 1.4 total miles of stream assessments completed in March and September, qualitative assessments were done concerning vegetative ground cover, stream channel configuration, and canopy coverage.

Complete a wetland inventory that encompasses the Urban Reserve areas. Update wetland inventory when Department of Land Conservation and Development (DLCD) provides funding for City's comprehensive plan periodic review (Ongoing)

The Department of Land Conservation and Development (DLCD) is not currently funding periodic reviews for comprehensive plan updates. At the time were DLCD has identified funding, a wetland inventory of the City's urban reserve area will likely be included in Newberg's Comprehensive Plan update.

Develop stream temperature monitoring program (Incomplete, But Started)

The development of the stream temperature monitoring program is schedule to be complete in July 2019. Some work has been started, but the majority of the program development is expected to occur over the coming months.

Implement stream temperature monitoring program (Not Started)

The implementation of the stream temperature monitoring program is not scheduled to be completed in May 2020. No progress has been made on this goal.

Appendix F: Stream Temperature Monitoring Program

Stream Temperature Monitoring Program

Total Maximum Daily Load (TMDL) Plan – Best Management Practice T-3 Stream Assessment

December 2019

Contents

Appendix

TMDL Background

The Oregon Department of Environmental Quality (ODEQ) created a Water Quality Management Plan (WQMP) for the Willamette Basin in 2006 which sets Total Maximum Daily Loads (TMDLs) i.e. water quality standards within the Willamette Basin (OAR 340-042-0040-(4)).

Any agency or municipality that has legal authority over activities or areas that are sources of pollutants that impact water quality are known as Designated Management Agencies (DMAs). DMAs that are responsible for areas draining into a water body with a TMDL, must develop an Implementation Plan describing activities or Best Management Practices (BMPs) to be undertaken to address TMDLs. The City of Newberg, is located in the Middle Willamette Subbasin and is a DMA that complies with this requirement.

In 2006, ODEQ issued a TMDL for nine of the 12 subbasins within the Willamette River Basin in an effort to protect and restore the beneficial uses of the Willamette River. Mercury, bacteria, and temperature were identified as problematic constituents for the Willamette River and the City developed an Implementation Plan to address the TMDL accordingly.

Newberg Watersheds

The City of Newberg has three major watersheds shown in Figure 1, Chehalem Creek, Hess Creek, and Spring Brook. All creeks and tributaries flow into the Willamette River which runs along the southern City boundary. The three major watershed boundaries extend outside of the City's urban growth boundary into upland areas north of the City. These waterbodies and their watersheds are part of the Middle Willamette Subbasin.

Naming Convention – Streams, Creeks, Brooks, and Tributaries

For the purpose of this document the words "stream" and "creek" will be used interchangeably. However, the word "stream" is most commonly used throughout the document. Formals names for Chehalem Creek, Hess Creek, and Spring Brook will be used where appropriate, and when used are meant to be inclusive of their respective tributaries.

Figure 1: City of Newberg Major Watersheds

Stormwater Subcatchment Areas

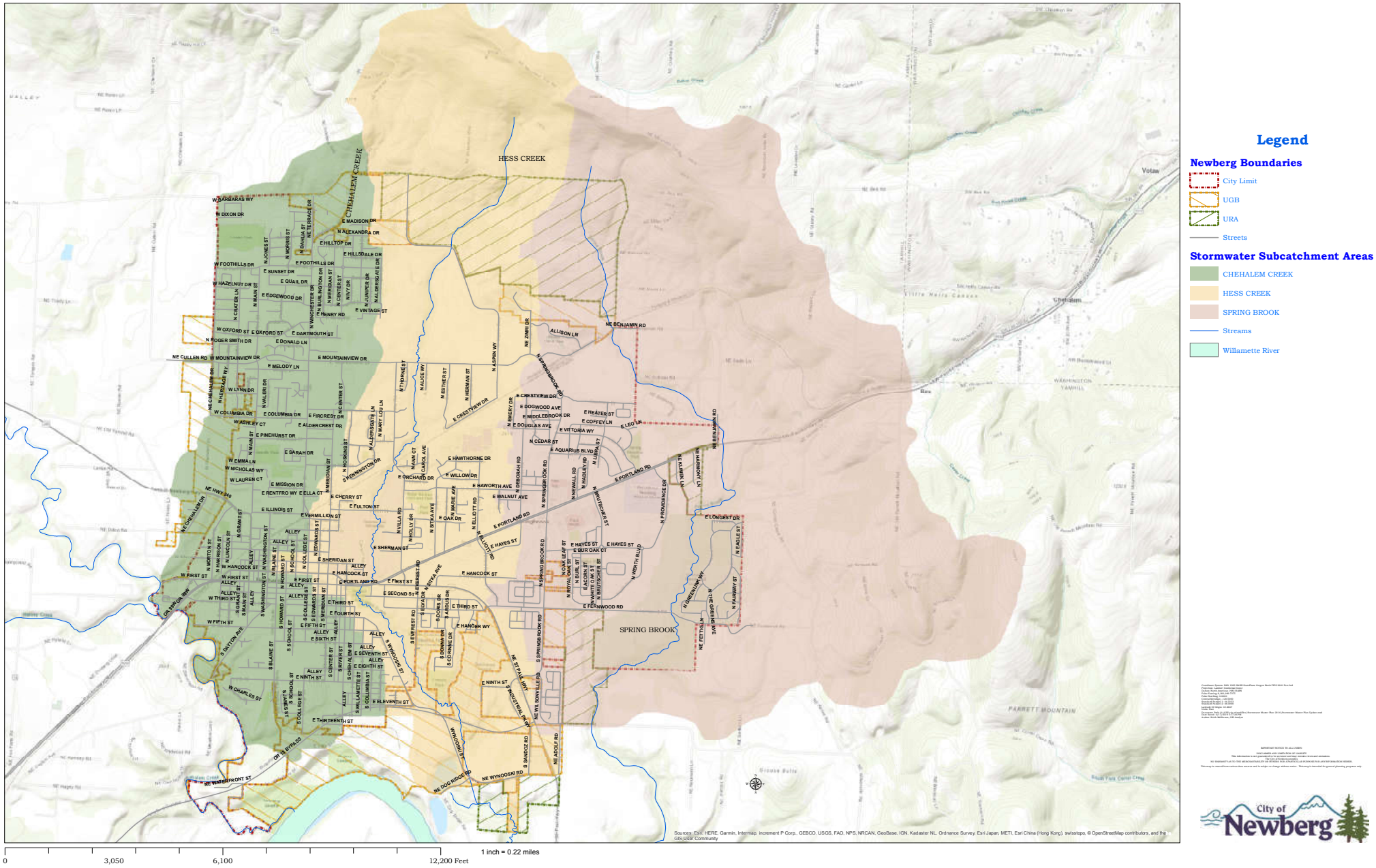

Temperature TMDL

Elevated temperatures in waterways can compromise several beneficial uses for surface waters. ODEQ reported that resident fish and aquatic life, salmonid spawning, rearing and migration, and anadromous fish passage are the most sensitive beneficial uses related to high temperatures. ODEQ has focused the temperature TMDL on the protection of the cold water salmonids. Per the Willamette River TMDL, the temperature criteria for tributaries is 18°C (64.4°F) to provide for salmon and trout rearing and migration, and 20°C (68°F) for the main stream Willamette (River Mile (RM) 0 to RM50) to provide for salmon and steelhead migration corridors. [1,2]

As a strategy to reduce temperature loading, shade targets were set. Mature riparian vegetation produces shade and creates a microclimate around the waterway that regulates and minimizes solar radiation. Although other techniques are available for reducing water temperatures, the installation of native riparian corridors provides a cost-effective, relatively simple approach that provides multiple benefits beyond temperature regulation. Other benefits include primary production of organic materials, source debris for in-stream channel complexity and habitat features, wildlife corridor connectivity, displacement of noxious vegetation, and visual aesthetics.

Stream Temperature Monitoring Program, BMP T-3

As part of the City's TMDL Implementation Plan, Best Management Practice (BMP) T-3 was established to Assess Stream Health and Canopy Coverage. One of the measureable goals under that BMP was to develop a stream temperature monitoring program to document procedures and identify locations for stream temperature sampling/monitoring. This goal has a target completion date in 2019, and this Stream Temperature Monitoring Program document fulfills this measurable goal. The purpose of this document is to inform City staff members of the Stream Temperature Monitoring Program procedures for consistency of data collection and analysis.

City of Newberg Stream Temperature Monitoring History

The City of Newberg has been deploying temperature monitoring equipment on an exploratory basis in preparation for creating a formal written Stream Temperature Monitoring Program. Three HOBOware® Temperature Monitors[3] were deployed in 2015, which were originally borrowed from the Greater Yamhill Watershed Council (GYWC). In following years, the City has purchased its own HOBOware® temperature monitoring equipment and has experimented with the equipment/software and monitoring locations to develop a baseline understanding of the stream temperature monitoring process.

---

[1] DEQ Chapter 340, Division 41 Water Quality Standards: Beneficial Uses, Policies, and Criteria for Oregon. https://secure.sos.state.or.us/oard/viewSingleRule.action?ruleVrsnRsn=244176 Accessed November 1, 2019.

[2] Division 41: Water Quality Standards – Rule Tables and Maps Referenced in OAR Chapter 340, Division 41. https://www.oregon.gov/deq/Regulations/Pages/OARDiv41.aspx Accessed November 1, 2019.

[3] ONSET. HOBOware® Temperature Monitors. HOBO® Water Temperature Pro v2 Data Logger and HOBO® Water Level (13 ft) Data Logger. https://www.onsetcomp.com/products/data-loggers. Accessed March 26, 2019.

"What is the goal of Newberg's Stream Temperature Monitoring Program?"

The City of Newberg is not currently an ODEQ MS4 Phase II permittee, so efforts to quantitatively measure water quality standards are voluntary and are being done proactively in anticipation of future requirements. As such, the City's effort to monitor and collect stream temperatures is being done on an exploratory basis with the goal to establish a baseline understanding of stream temperature in the City's watersheds taking an "upstream/downstream approach" where temperature is monitored near locations where streams enter and exit the City limits.

The City's methodology for collecting stream temperature data follows the Level B data collection procedure per the ODEQ Data Acceptance Criteria methodology as discussed in the Accuracy Check procedure noted in Chapter 6 of the OWEB, Water Quality Monitoring Guidebook Version 2.0, July 1999.

The City plans to implement the Stream Temperature Monitoring Program and collect field data following the methodology laid out in this document starting in May 2020 and will continue to collect data over the remaining 5-year TMDL Plan horizon through December 2022. Information collected is intended for the City's informational purposes only and the City is not required to submit data to ODEQ or any other entity.

It is anticipated that the Stream Temperature Monitoring Program goals and collection methods may change in the next TMDL Plan cycle (2023-2027) based on the information collected and the ease of the process established in this original effort.

Stream Temperature Monitoring Activities

Below is an overview of stream temperature monitoring activities associated with the stream temperature monitoring program. More detailed information regarding equipment deployment, monitoring locations, field equipment, deployment methods, conducting a field visit, data analysis, and resources and can be found in the following sections.

Stream Temperature Equipment Deployment

The purpose of measuring stream temperatures is to understand locally how tributaries to the Willamette River (Chehalem Creek, Hess Creek, and Spring Brook) relate to state regulations regarding temperature and more importantly to establish a baseline for stream temperature since data has not previously been captured and processed according to an established standard.

Per the Willamette River TMDL, the temperature criteria for tributaries is 18°C (64.4°F) to provide for salmon and trout rearing and migration, and 20°C (68°F) for the main stream Willamette (River Mile (RM) 0 to RM50) to provide for salmon and steelhead migration corridors. The City of Newberg is located in northeast Yamhill County at Willamette River mile 50.2, approximately 25 miles southwest of the City of Portland and follows the standard set forth in OAR340-041-0028(4)(c) and (d). [4,5]

---

[4] DEQ Chapter 340, Division 41 Water Quality Standards: Beneficial Uses, Policies, and Criteria for Oregon. https://secure.sos.state.or.us/oard/viewSingleRule.action?ruleVrsnRsn=244176 Accessed November 1, 2019.
[5] Division 41: Water Quality Standards – Rule Tables and Maps Referenced in OAR Chapter 340, Division 41. https://www.oregon.gov/deq/Regulations/Pages/OARDiv41.as`px Accessed November 1, 2019.

Stream temperature monitoring equipment will be deployed in late spring (May/June) after high winter waters have begun to recede, and retrieved in fall (September/October) before the first big rains begin to raise creek levels. This deployment timeline will vary from year to year based on specific weather patterns, but generally speaking the goal is to have the monitoring equipment in the water during the hottest ambient air temperature season i.e. summer. Hot ambient air temperatures most often correspond to the heat loading in local waterbodies especially when those water bodies are not fully shaded. All temperature monitoring equipment goes through an "accuracy check" both before and after deployment to verify that the readings recorded are within a margin of error during a simulated deployment event where water temperatures are checked independently using a National Institute of Standards and Technology (NIST) certified temperature probe. See Figure 2 depicting the stream temperature equipment deployment schedule.

Figure 2: Stream Temperature Equipment Deployment Schedule

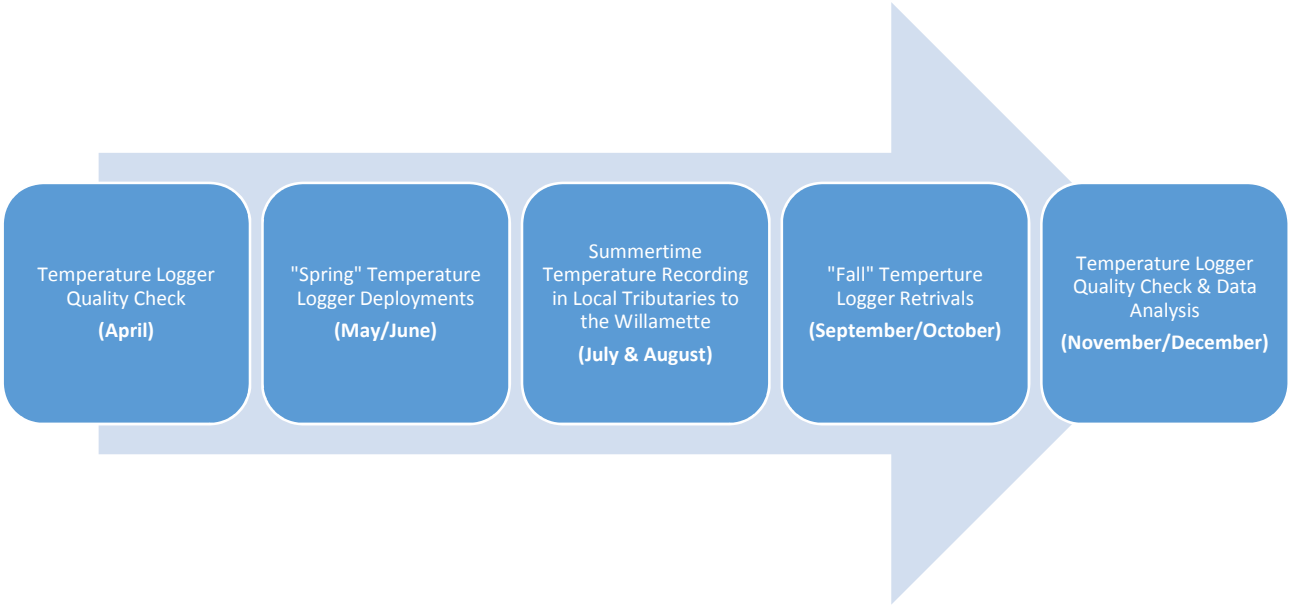

Stream Temperature Monitoring Locations

As a Designated Management Agency, the City of Newberg is concerned with temperature loading within city limits. Therefore the ideal stream temperature monitoring locations should be located at the northern and southern boundaries of the City where the boundary limit intersects Chehalem Creek, Hess Creek, and Spring Brook (six total monitoring locations). The temperature difference between the northern and southern boundaries on each creek system, by proxy, should best represent temperature loading that can be associated with activities within the city limits within their associated watersheds and is consistent with an "upstream/downstream" approach.

Establishing these ideal monitoring locations must be done with both knowledge of the watershed as well as support by, and collaboration with, private property owners. The City of Newberg owns very few parcels of land that are inclusive of Chehalem Creek, Hess Creek, or Spring Brook and therefore must work with private property owners to establish locations at the City's northern and southern boundaries. These relationships are important and are often built slowly over time. As land ownership changes, re-establishing relationships with new property owners to gain access to the watershed system

is imperative. As of the writing of this document (July 2019), the City has established monitoring locations on the northern and southern boundaries of Hess Creek and Spring Brook, but does not have monitoring locations on Chehalem Creek due to a lack of interest in collaboration by private property owners.

In addition to private property ownership collaboration, it should be noted Spring Brook does not have continuous water flows at the northern city limit boundary during summer months, which was discovered through exploratory efforts As such, a location further downstream was identified where continuous water flows were present throughout the summer.

A "cut sheet" has been developed for each temperature monitoring location to describe the location, document the granted access by private property owners, and rate each location on ease of access. Some monitoring locations are more difficult to access due to creek incising, poisonous plants (i.e. poison ivy, poison oak, and stinging nettle), nutria holes along the banks, and/or distance from the parked vehicle to the monitoring site. Efforts should be continuously made to find more accessible monitoring sites or to improve the monitoring sites where access has been granted. Temperature monitoring site cut sheets from the 2018 monitoring season are attached in Appendix A.

Field Equipment

Field equipment consists of equipment moved into and out of the field during each season, equipment permanently installed in the field, and equipment needed to be prepared to conduct field visits. More details and checklists are provided in the following sections.

Temperature Monitoring Equipment & Software

The City uses two types of equipment to monitor stream temperature, the HOBO® Water Temperature Pro v2 Data Logger and HOBO® Water Level (13 ft) Data Logger which can be seen in Figure 3 and Figure 4. Manufacturer information about each sensor can be found in Appendix B. Although the City has two different equipment types, they are both used exclusively to measure temperature, currently the water level functionality of the HOBO® Water Level (13 ft) Data Logger is not being utilized. A summary of the City's temperature monitoring equipment can be found in Appendix C, currently the City owns four (4) HOBO® Water Temperature Pro v2 Data Loggers and six (6) HOBO® Water Level (13 ft) Data Loggers. For consistency the City tries to deploy the same equipment serial numbers at the same monitoring sites each year. Procedures for downloading the data off the temperature monitoring equipment can be found in Appendix F.

Figure 3: HOBO® Water Temperature Pro v2 Data Logger

Figure 4: HOBO® Water Level (13 ft) Data Logger

In addition to the monitoring equipment discussed above, a HOBO® Waterproof Shuttle is also required to download the data from the collection devices and import it into analysis software, see Figure 5 and Figure 6. The user manual for the HOBO® Waterproof Shuttle can be found in Appendix B.

Figure 5: HOBO® Waterproof Shuttle

Figure 6: HOBOware Data Downloading Configuration

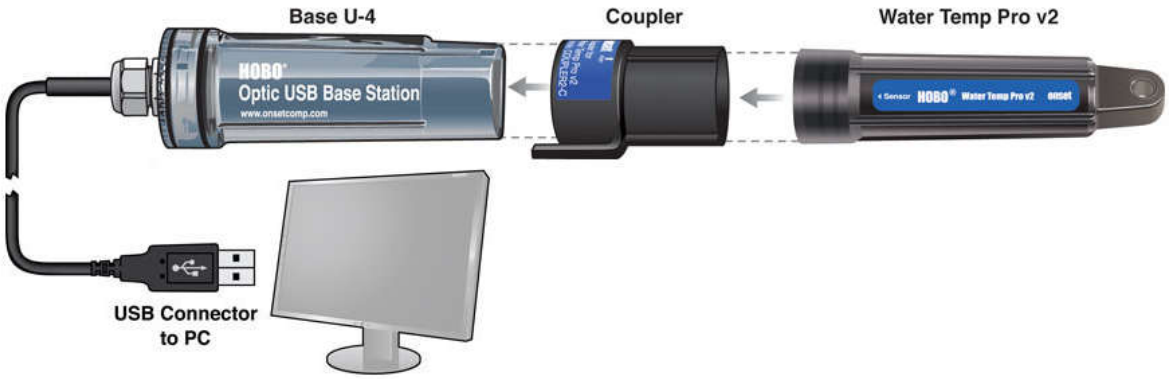

The City of Newberg has also purchased the accompanying software, HOBOware Pro®, used to analyze the data collected. The license key for the software can be found in Appendix E along with detailed directions on how to complete a data transfer. Support guidance on using the HOBOware Pro software and data transfer can be found in the USGS, Monitoring Stream Temperatures, A Guide for Non-Specialists, 2018 manual as well as the HOBOware® User's Guide both of which can be found online. The HOBOware Pro® software works best when installed on an independent laptop and not on the City's network drive (Citrix® server).

Accuracy Check Procedure

To verify the accuracy of the HOBO® Water Temperature Pro v2 Data Logger and HOBO® Water Level (13 ft) Data Logger they must be checked both before deployment and after deployment. This accuracy check is sometimes incorrectly referred to as "calibration" however, the instruments cannot be changed

to agree with a known standard (i.e., calibrated) so "calibration" is the wrong terminology. A testing procedure has been developed by the Oregon Watershed Enhancement Board (OWEB) to test equipment accuracy. Deviations from a known temperature are recorded and this procedure is referred to as an accuracy check. Accuracy checks should be made at two temperatures; one between 5-15°C (42-62°F) and the other between 15-25°C (62-82°F). Testing is done using a stable thermal mass such as a water-filled cooler.

A National Institute of Standards and Technology (NIST) traceable (calibrated and maintained) thermometer accurate to ±0.2°C shall be used as the independent check during the accuracy test. The City of Newberg borrows the NIST temperature probe from the GYWC[6] since their probe is calibrated on an annual basis. The detailed steps of the accuracy check can be found in Appendix G and in Chapter 6 of the OWEB, Water Quality Monitoring Guidebook Version 2.0, July 1999.

Performing the accuracy check allows the temperature data collected to be "graded" at a higher level. Data grading and the steps to produce Level A data vs Level B data will be discussed in more detail in a following section.

Temperature Monitoring Deployment Methods

The City currently uses two methods to deploy temperature monitoring equipment; stilling wells and weighted plates. The deployment method depends on the preference of the property owner and/or the direct sunlight present at the location.

An ideal monitoring location has a full tree canopy covering the creek with no direct sunlight hitting the water's surface. Solar radiation can increase the water temperature at a micro-location and skew data collection/analysis, so it is important to identify a monitoring location with shade coverage. The ideal location within a creek is center of the channel where the water is continuously flowing the fastest, slack water should be avoided. Although in some circumstances the fastest running water in a channel does not occur at the center of channel, but instead on an inside or outside corner/bend. When establishing a monitoring site, visiting the site multiple times throughout the data collection season is the best way to select a preferred location in the stream channel.

Stilling Well

The preferred temperature monitoring deployment method is to install a stilling well. The City has constructed "low-tech" stilling wells made from two pieces of concentric PVC pipe with a staff gauge and end topper as shown in Figure 7. Using a power drill, holes are drilled in the 2-inch and 4-inch PVC pipes that are then embedded into the creek bed. The holes allow water to run freely through the PVC and provide accurate readings from the temperature monitoring loggers. Installing the stilling well requires the use of a T-post pounder to embed both the 4-inch and 2-inch PVC pipe into the stream bed. Once the PVC pipes have been installed, clothesline wire[7] is then used to suspend the temperature probe or water logger inside the 2-inch pipe without the monitor resting on the stream bed, see Figure 8.

---

[6] Contact information for the Greater Yamhill Watershed Council (GYWC) can be found at their website http://www.gywc.org/ The Executive Director of GYWC, Luke Westphal can be contact at 503-474-1047.

[7] Clothesline wire can be purchased at any hardware or home improvement store. Typically it is a 15-guage wire with blue coating.

Figure 7: Stilling Well Temperature Logger Deployment Method

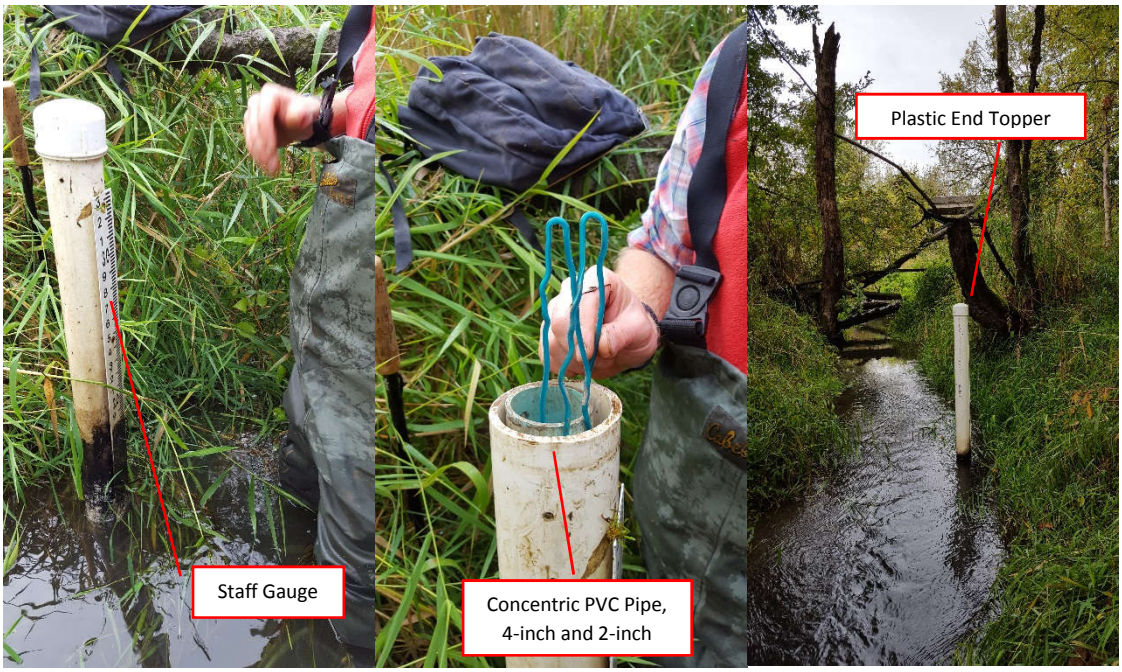

Figure 8: Stilling Well Deployment Diagram

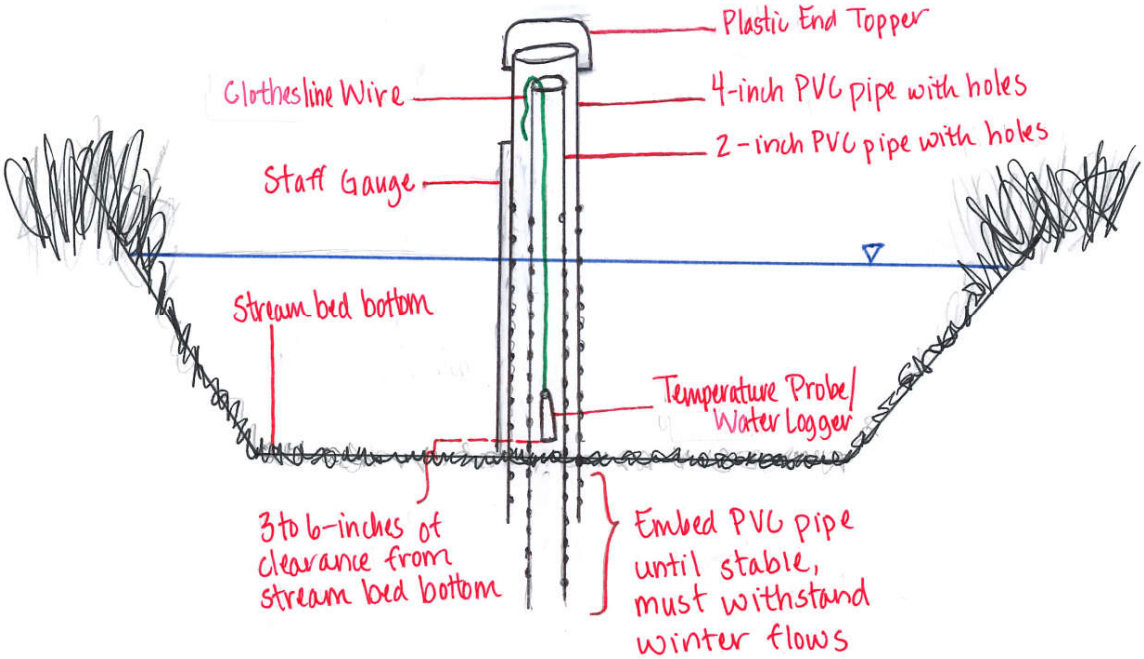

When visiting the site, remove any debris that could impact the stilling well during high flows and check the sturdiness of the installation i.e. does the PVC pipe "wiggle or move" when leaned on. The stilling well stays in place throughout the year, so it is important that it is sturdy enough to withstand high

winter flows. In the spring, if it is found that the stilling well is loosely imbedded into the stream bed take corrective action to remedy the condition, this may include removing and reinstalling the stilling well.

Weighted Plate

A weighted plate is the second method used to deploy temperature monitoring equipment. Weighted plates can be purchased from second hand stores and reused year after year, typically a 5-10 pound plate is used based on flows. Figure 9 shows the deployment setup using a weighted plate. A 2-inch PCV pipe has been cut into 6-inch lengths with holes drilled through the pipe to allow water to flow freely. A white PVC pipe is used to shield the temperature monitor from any direct sunlight that may hit the water's surface (do not use a black or dark color PVC that can absorb heat). Zip ties are then used to secure the temperature monitor inside the PVC shield, clothesline wire can also be used. Clothesline wire is then used to secure the PVC shield to the weighted plate. The weighted plate is then positioned in the stream bed in a preferred location. Rocks can be used to support or secure the weighted plate, or the plate can be tucked up under the stream channel bank on an inside or outside corner/bend with the fastest flowing water. It's recommended that clothesline wire then be used to secure the weighted plate to a secure object along the creek like a tree trunk see Figure 10.

Figure 9: Weighted Plate Temperature Logger Deployment Method

Figure 10: Weighted Plate Deployment Diagram

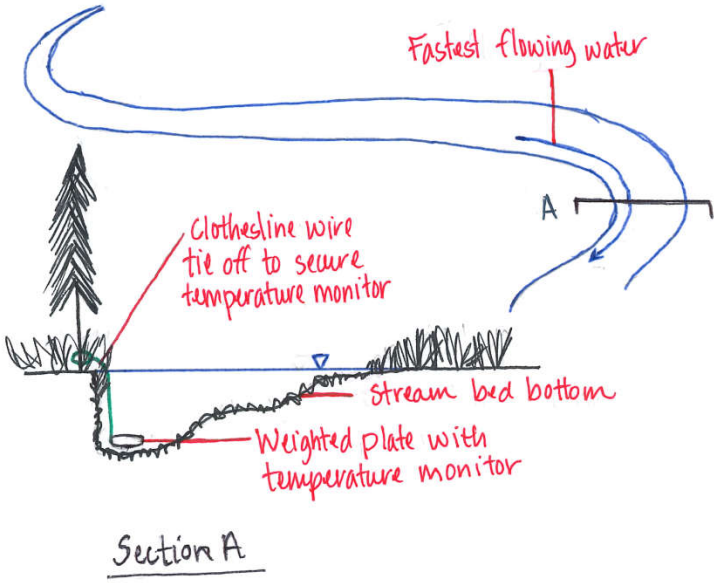

Weighted plate deployments can be used for a variety of reasons, some of which are listed below:

- Locations where a property owner does not want a permanent stilling well installed
- Locations where a stilling well has been previously tampered with or field equipment has been stolen/removed by the public
- Locations where testing of a permanent stilling well location is being vetted
- Locations with low flows during summer
- Locations with high winter water flows and it is anticipated a stilling well may not withstand the flows
- Locations where the stream channel has historically moved
- Locations above and below intersecting tributaries to learn more about the watershed system (these are more temporary installations and may only be deployed for one season).

When a weighted plate method is used, if possible, record GPS coordinates for the location of the deployment or take good pictures and provide detailed documentation of the deployment location. Enough information should be provided that a staff member who was not present for a temperature monitor deployment could find and retrieve field equipment at the end of the monitoring season. Take necessary precautions to avoid losing monitoring equipment.

Conducting a Field Visit

Timing for field visits can be challenging depending on work load, so making the most of a field visit is very important. The following sections discuss preparing for a field visit, what to do during a field visit, and how to finish up documentation after a field visit.

Preparing for a Field Visit

Prior to deploying monitoring equipment in the spring, conducting a mid-season site check, or retrieving monitoring equipment in the fall, it is important to successfully prepare for each field visit. A field

equipment checklist can be found in Appendix D. Below are general guidelines to consider when preparing for a field visit.

1. Prior to deploying monitoring equipment, turn on data logging and verify the recording interval (temperature collection once every 5 minutes).
2. Evaluate weather forecast and identify a day to conduct field work without precipitation and with no precipitation the proceeding three to five days.
3. A field visit must be conducted <u>with at least two people</u> using the "buddy system." Deploying, retrieving, or monitoring field equipment without at least two people is strictly prohibited.
4. Coordinate and notify property owners of access to the site and provide them the date and approximate time of the field visit. Try to notify property owners three to five days before the field visit if possible. Same day notification of a field visit should be avoided.
5. Determine what sites will be visited and the order that they'll be visited during the field day.
6. Review Field Equipment Checklist and gather equipment needed to perform identified field work.
7. Review notes from the previous field visit (when available) to familiarize yourself with site conditions or any notes made about the location.
8. Notify your supervisor or a coworker in the office about your plan for the day with locations for deployment. This person will be your office "check-in/check-out" to make sure that if something goes wrong in the field, the appropriate authority can be notified.

Field Visit Activities

Once arriving at a monitoring site below is a list of activities that should be conducted:

1. Upon arriving at a monitoring site have a quick informal "tailgate safety meeting" to discuss the tasks to be performed and draw attention to any hazards, processes, equipment, tools, environment and materials at the site that could pose a risk to field crew members.
2. Make sure each field crew member has a telecommunication device on their person that could be used to call for help in the event of an emergency.
3. Observe access into and out of the monitoring location and evaluate for any new debris or collapsed bank conditions. Make a plan on how best to get down into the creek and go into the monitoring site/water one at a time i.e. both people do not enter the water at the same time. Before entering the monitoring site identify at least two feasible ways to get out of the site.
4. Deploy or retrieve monitoring equipment. See Figure 7 through Figure 10.
5. Make notes of the field condition in a Rite in the Rain book, see Figure 11.
    a. Note the name of the monitoring site ex. Hess Creek Northern Location – N Aspen Way
    b. Note site condition and any improvements need to be made i.e. remove poison oak, need rope to access site, etc.
    c. Note any significant changes to the site since it was last accessed.
    d. Record the serial number on the temperature probe/water logger.
    e. Using a NIST Temperature Probe take a temperature reading of the water and note the time the temperature reading was taken.
    f. Take pictures of the site (upstream/downstream/directly above) and note the shade/tree coverage (no coverage, partial coverage, or full coverage).
    g. If possible, note the GPS coordinates if setting a new monitoring location.

h. Provide a description of where exactly the temperature probe/water logger is located if using the weighted plate method ex. what tree is the plate tied off to?

6. Remove loose debris which may impact a monitoring site ex. floating debris that got hung up on a stilling well.

Figure 11: Example of Note Taking During Site Visit

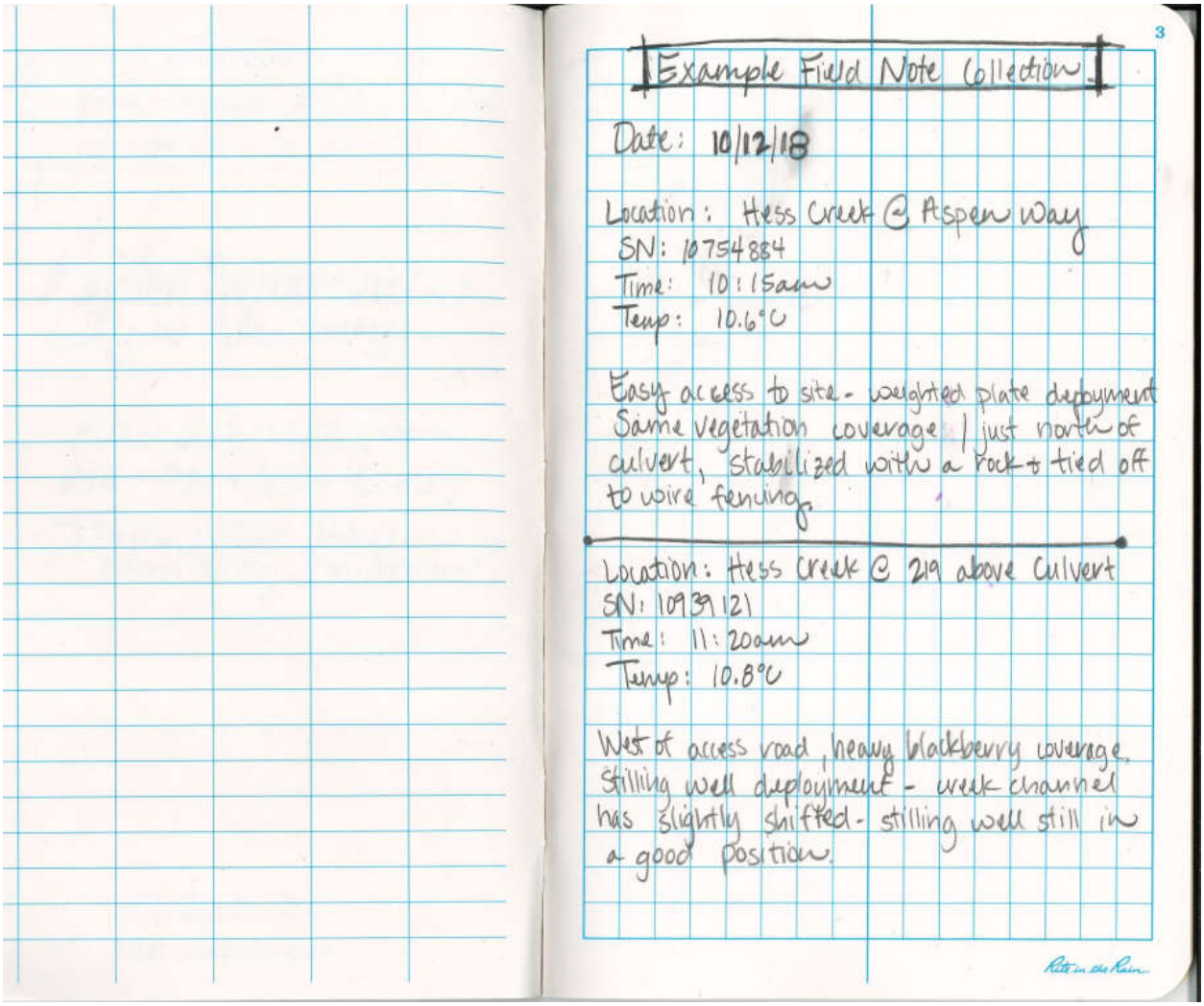

Example Field Note Collection

Date: 10/12/18

Location: Hess Creek @ Aspen Way
SN: 10754884
Time: 10:15am
Temp: 10.6°C

Easy access to site - weighted plate deployment
Same vegetation coverage / just north of culvert, stabilized with a rock + tied off to wire fencing.

Location: Hess Creek @ 219 above Culvert
SN: 10939121
Time: 11:20am
Temp: 10.8°C

West of access road, heavy blackberry coverage. Stilling well deployment - creek channel has slightly shifted - stilling well still in a good position.

Returning from a Field Visit

After returning from the field, the following list of activities that should be conducted:

1. Dry out all field equipment. Special care needs to be taken with chest waders and boots to avoid mold from growing.
2. At the end of monitoring season, download the temperature data and perform accuracy checks.
3. Download all pictures and label/name them according to monitoring site locations.
4. Scan all field notes and save them in the directory.
5. Update any site location cut sheets if monitors have been removed or relocated.

Data Analysis

The City of Newberg is voluntarily collecting stream temperature data as part of the TMDL Program and while goal T-3 in the TMDL Program exists, temperature monitoring is not an ODEQ requirement. As such, the City is in an exploratory stage when it comes to its temperature monitoring program.

Data Level

ODEQ has a Data Quality Matrix and classifies data collected as Level A, Level B, or Level C. Level A data requires a Quality Assurance Project Plan (QAPP) approved by ODEQ, which is beyond the scope of the City's TMDL obligations and funding. Therefore, at this time, the City is following methodology to collect Level B temperature data. Level B temperature data needs to be collected per the ODEQ Data Acceptance Criteria methodology as discussed in the Accuracy Check procedure noted in Chapter 6 of the OWEB, Water Quality Monitoring Guidebook Version 2.0, July 1999. The NIST Temperature Probe is accurate to ±0.2°C and the difference between the NIST recorded temperature and the data logger's temperature has precision not to exceed ±0.5°C. Level B data is generally characterized as being used as an early warning sign of potential problems or for screening information.

Data Evaluation

Once the stream temperature data has been collected and the accuracy check confirms that Level B data was collected, the data can then be evaluated. The evaluation of stream temperature data supports the City's effort to establish a baseline of stream temperatures entering and leaving the city limits. A variety of analysis can be done to the data which is described below:

- Stream temperatures can be numerically evaluated and compared to the Willamette River Temperature TMDL i.e. how often did stream temperatures (tributaries to the Willamette River) exceed 18°C (64.4°F)?
- Stream temperatures can be compared using an "upstream/downstream" approach were the data collected at the northern city limit is compared to data collection at the southern city limit over the same time frame.
- Stream temperatures collected can be compared to ambient air temperature of a nearby weather station.
- Stream temperatures can be compared across watersheds.

Graphing temperature data is a useful way to understanding the data collected and can be used to help tell the story of stream temperatures within the City of Newberg.

Next Steps

The City of Newberg will begin implementing the Stream Temperature Monitoring Program in May 2020 and will continue to collect data over the remaining 5-year TMDL Plan horizon through December 2022. Information collected is intended for the City's informational purposes only and the City is not required to submit data to ODEQ or any other entity. However, the City does plan to evaluate this data to begin to establish temperature baselines for our three watersheds. Additionally, the City will continue to work with private property owners to identify and establish preferred monitoring locations throughout the City.

Resources

The City of Newberg has worked closely with the Director of the Greater Yamhill Watershed Council (GYWC) to develop and document the activities required to perform steam temperature monitoring based on the Oregon Water Enhancement Board (OWEB) Water Quality Monitoring Guidebook.[8] Data collected within the City of Newberg is shared with the GYWC to fulfill the objectives of their regional watershed monitoring program. Furthermore, field visits are often conducted in collaboration with the Director of the Watershed Council to streamline monitoring activities as well as quality checks.

The City of Newberg submits annual TMDL reports to ODEQ. As part of that requirement, the ODEQ Willamette Basin Coordinator (Nancy Gramlich) is a point of contact and resource for all TMDL requirements.

Other stream temperature monitoring resources available online are included below:

Oregon Watershed Enhancement Board (OBEW) – Field & Technical Guides

- *USGS, Monitoring Stream Temperatures, A Guide for Non-Specialists, 2018*
- *OWEB, Oregon Watershed Assessment Manual, July 1999*
- *OWEB, Water Quality Monitoring Guidebook Version 2.0, July 1999*
- *OWEB, Water Quality Monitoring Guidebook, Chapter 14 Addendum*

Oregon Department of Environmental Quality (ODEQ) – Volunteer Water Quality Monitoring

- *ODEQ, Water Quality Volunteer Monitoring Quality Assurance Project Plan, November 2009*

[8] Oregon Watershed Enhancement Board (OWEB). Field & Technical Guides. *Water Quality Monitoring Guidebook, Version 2.0*. https://www.oregon.gov/oweb/resources/Pages/Field-Tech-Guidance.aspx. Accessed August 7, 2019.

Appendix

Appendix A: Monitoring Site Cut Sheet Examples

Appendix B: HOBO®ware Equipment Manuals

Appendix C: City of Newberg HOBO®ware Equipment Inventory

Appendix D: Field Equipment Checklist

Appendix E: HOBO®ware Pro License Key and Download Instructions

Appendix F: Downloading Temperature Data Instructions

Appendix G: Temperature Monitoring Equipment Accuracy Check

Appendix A: Monitoring Site Cut Sheet Examples

Upper Hess Creek at 3612 NE Aspen Way

Temperature Probe S/N: 10754884

Device: Temperature Probe

Site Description: Address is *3612 NE Aspen Way*. Pull into driveway/or park along Aspen Way (talk with property owner before arrival). Walk east down to the creek. The owner has cut back the blackberries

Rating: 1 (1=easiest access, 5=hardest access)

Access: Private Access, contact is Robert Simokovic 3612 NE Aspen Way (818)-298-2669 (see email in file)

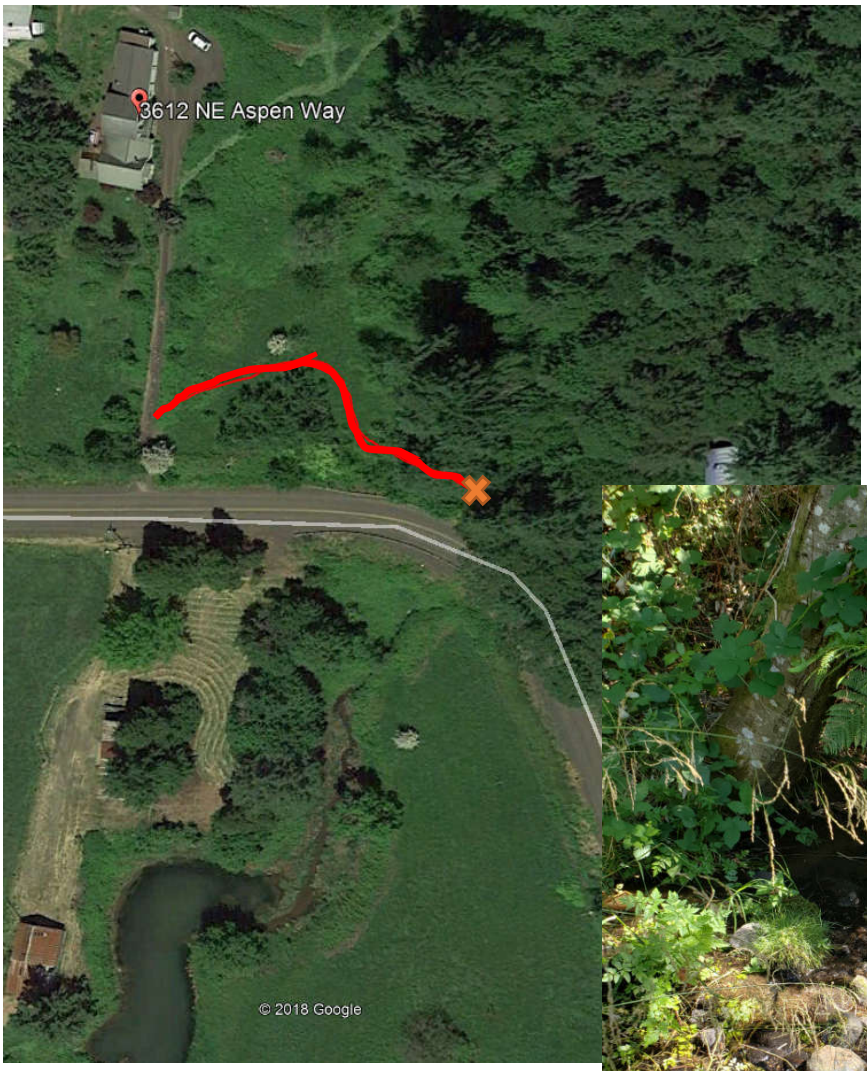

Hess Creek above 219 Culvert

Temperature Probe S/N: 10939121

Device: Water Level Logger with a Stilling Well (white PVC pipe)

Site Description: Access using NE Hash Rd, eastside of 219 (comes up on you quick while driving). Will need to unlock gate or walk into the site.

Park at location shown, walk along the north side of the creek west of the roadway

Rating: 3 (1=easiest access, 5=hardest access)

Access: Private Access, land owned by CPRD previous coordination with Jim McMaster 503-209-2222. Coordination is now with Casey Creighton 503-519-6154, ccreighton@cprdnewberg.org

OR219 Bridge Structure

Hess Creek – North Fork

Temperature Probe S/N: 10911416 – Water Level Logger with a Stilling Well (white PVC pipe)

Site Description: Access using NE Hash Rd, eastside of 219 (comes up on you quick while driving). Will need to unlock gate or walk into the site.

Park at location shown, walk along the north side of the creek west of the roadway

Rating: 3 (1=easiest access, 5=hardest access)

Access: Private Access, land owned by CPRD previous coordination with Jim McMaster 503-209-2222. Coordination is now with Casey Creighton 503-519-6154, ccreighton@cprdnewberg.org

Springbrook Creek at Benjamin Road

Temperature Probe S/N: 10939122

Device: Water Level Logger with a Stilling Well (white PVC pipe)

Site Description: Address is *30230 NE Benjamin Road*. Pull into driveway and stilling well is visible from the driveway. Stilling well is located on the north side of the driveway.

Rating: 1 (1=easiest access, 5=hardest access)

Access: Private Access, contact is Vicki Shepherd 30230 NE Benjamin Rd Newberg OR 97132 (503)-538-9466 (see email in file)

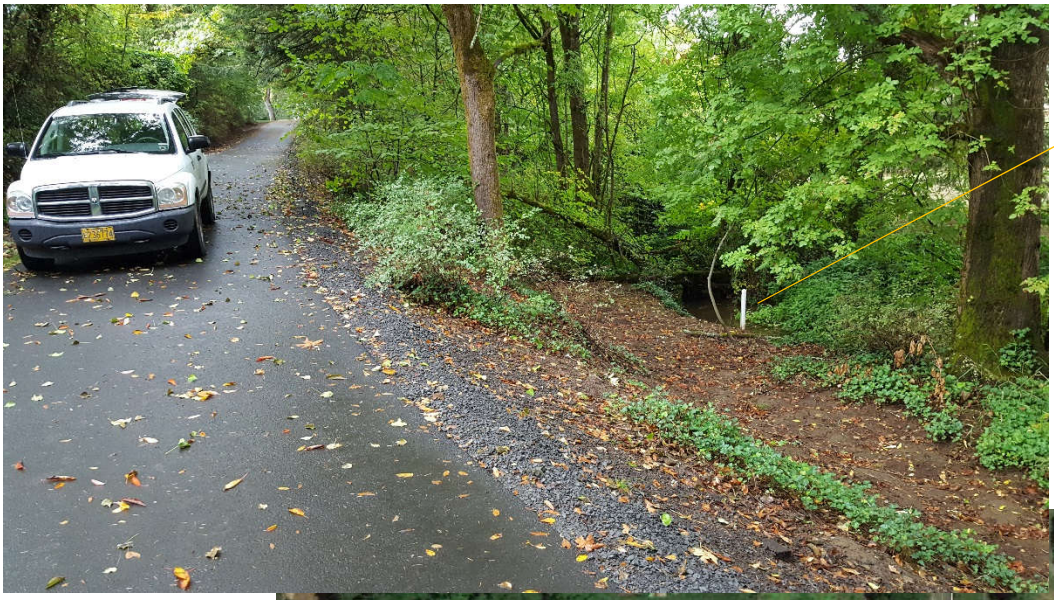

Springbrook Creek at 219

Temperature Probe S/N: 10911415

Device: Water Level Logger with a Stilling Well (white PVC pipe)

Site Description: Access using NE Hash Rd, eastside of 219 (comes up on you quick while driving). Will need to unlock gate or walk into site.

From roadway to "X" mark, there is a lot of posion oak, keep hands high. Bring rope from tool kit to tie off to t-post, the back is steep and the rope will help getting into and out of the creek. The bottom of the creek is super silty, keep moving your feet so you don't sink in too far and loose a shoe.

Rating: 4 (1=easiest access, 5=hardest access)

Access: Private Access, land owned by CPRD previous coordination with Jim McMaster 503-209-2222. Coordination is now with Casey Creighton 503-519-6154, ccreighton@cprdnewberg.org

Tie rope to t-post to help get into and out of water.

Appendix B: HOBO®ware Equipment Manuals

HOBO® Waterproof Shuttle (U-DTW-1) Manual

The HOBO Waterproof Shuttle performs several major functions:

- Reads out all logger information (serial number, deployment number, data, etc.) from loggers in the field for transfer to host computer, and stores each logger's data in a "bank"
- Nonvolatile memory preserves data, even if batteries are depleted
- Relaunches the logger, resetting the logger's time to the shuttle's time and synchronizing the logging interval on relaunch
- Can be used as an optic-to-USB base station
- Can be used to read out and relaunch loggers underwater

Although the HOBO Waterproof Shuttle is easy to use, Onset strongly recommends that you spend a few minutes reading this manual and trying out the procedures described here before taking the shuttle into the field.

HOBO Waterproof Shuttle

U-DTW-1

Included Items:

- USB cable
- Set of couplers;
  - For UA Pendant (COUPLER2-A)
  - For U20 Water Level (COUPLER2-B)
  - For U20L Water Level, U22 Water Temp Pro v2, U24 Conductivity, and U26 DO (COUPLER2-C)
  - For UTBI TidbiT v2 (COUPLER2-D)
  - For U23 HOBO Pro v2 (COUPLER2-E)

Required Items:

- HOBOware Pro 2.2 or later
- Compatible logger and matching coupler

Specifications

Compatibility	All HOBO U-Series loggers with optic USB. Not compatible with the HOBO U-Shuttle (U-DT-1).
Data Capacity	63 logger readouts of up to 64K each
Operating Temperature	0° to 50°C (32° to 122°F)
Storage Temperature	-20° to 50°C (-4° to 122°F)
Wetted Materials	Polycarbonate case, EPDM o-rings and retaining loop
Waterproof	To 20 m (66 feet)
Time Accuracy	±1 minute per month at 25°C (77°F); see Plot A
Logger-to-Shuttle Transfer Speed	Reads out one full 64K logger in about 30 seconds
Shuttle-to-Host Transfer Speed	Full shuttle offload (4 MB) to host computer in 10 to 20 minutes, depending on computer
Batteries	2 AA alkaline batteries required for remote operation
Battery Life	One year or at least 50 complete memory fills, typical use
Weight	150 g (4 oz)
Dimensions	15.2 x 4.8 cm (6.0 x 1.9 inches)
CE	The CE Marking identifies this product as complying with all relevant directives in the European Union (EU). To maintain CE compliance, this product must be used with the supplied USB cable or equivalent (less than 3 m long).

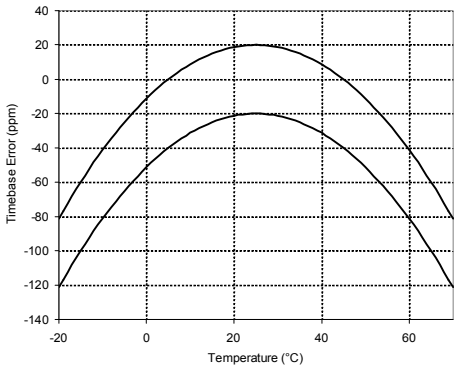

Plot A

HOBO Waterproof Shuttle Features

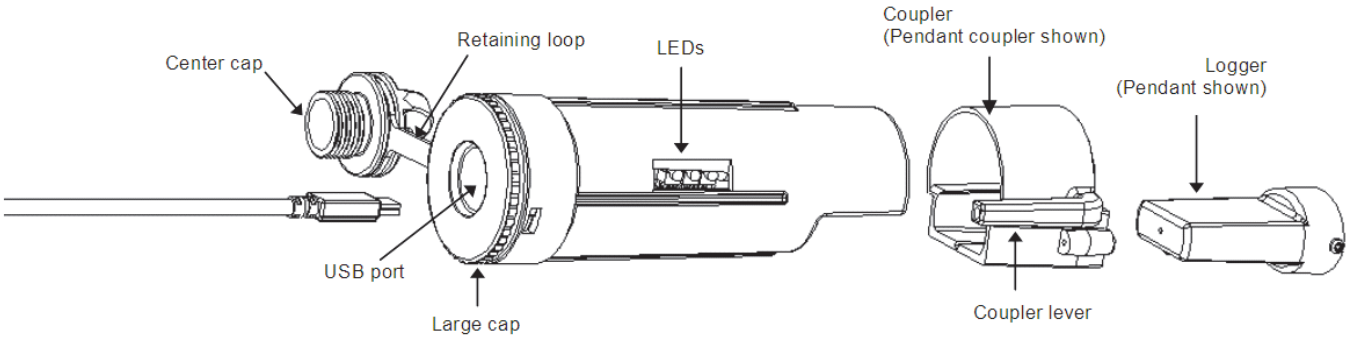

Preparing to Go on Location

Before using the shuttle for the first time, you must launch it with HOBOware 2.2 or greater. You must also launch any compatible loggers that were last launched with an earlier version of HOBOware, or have never been launched at all.

1. Use HOBOware 2.2 or greater to launch each logger you wish to read out and relaunch with the shuttle later. (Read "Using the shuttle as a base station" for instructions if you do not have another base station for the loggers.) The shuttle cannot relaunch loggers that were last launched with an earlier version of HOBOware. (You only have to do this once for each logger.)
2. Plug the large end of a USB interface cable into a USB port on the computer. (Avoid using a USB hub, if possible.)
3. Unscrew the center cap on the shuttle. If the cap is too tight to loosen by hand, insert a screwdriver through the lanyard hole and rotate counterclockwise until the cap is loosened.
4. Plug the small end of the USB interface cable into the USB port in the shuttle. (If the shuttle has never been connected to the computer before, it may take a few seconds for the new hardware to be detected.)
5. Follow the instructions in the *HOBOware User's Guide* to access the **Manage Shuttle** dialog. Make sure the battery level is good, and change the batteries now if they are weak.

Important: If you change the batteries in the field, the shuttle's clock will stop, and the shuttle will not read out loggers again until you relaunch it in HOBOware.

6. If you are using the shuttle for the first time, launch the shuttle as described in the *HOBOware User's Guide*. Launching synchronizes the shuttle's clock to the host computer and initializes the shuttle's header.

Important: The shuttle's clock is used to set the logger's clock at relaunch. For most accurate results, make sure the host computer's clock is correct before launching the shuttle. If you need to adjust the computer's clock, quit HOBOware, set the computer's clock, then reopen HOBOware and launch the shuttle.

7. If you have used the shuttle before, make sure there are enough banks available to accommodate the loggers you plan to read out.
8. Disconnect the USB cable from the shuttle and replace the center cap securely.

Reading Out and Relaunching Loggers in the Field

After you have ensured that the shuttle's batteries are good, there is sufficient memory available, and the shuttle's clock is synchronized, follow these steps to read out and relaunch a logger in the field:

1. Make sure the shuttle's large cap and center cap are closed securely. Tighten the center cap until it is just flush with the large cap, or until the O-ring is no longer visible.
2. Make sure the communication end of the shuttle is clean. Attach the correct coupler for the logger, and ensure that it is seated properly.
3. Insert the logger into the coupler, following the instructions that came with the coupler.
4. Momentarily press the coupler lever (pressing hard enough so the lever bends).

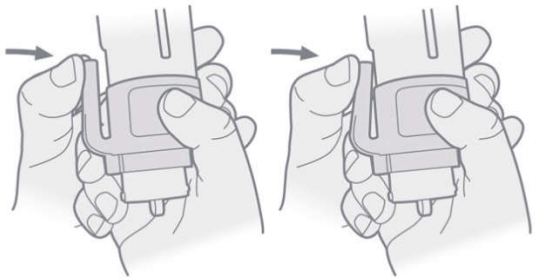

Readout should begin immediately. The amber LED blinks continuously while readout and relaunch are in progress. Do not remove the logger when the amber LED is blinking.

5. After reading out the logger, the shuttle synchronizes the logger's clock to the shuttle's internal clock and relaunches the logger, using the description, channels to log, logging interval, and other settings that are already in the logger. (If the logger was launched with multiple logging intervals, the final defined logging interval will be used.) The logger is

launched with a slight delay that causes its readings to be synchronized with those of the previous deployment, as shown in the following diagram.

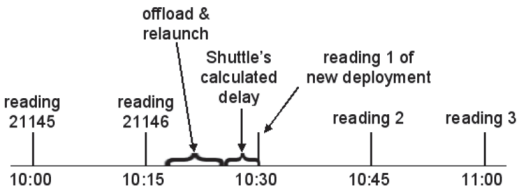

Important: If the logger was launched with multiple logging intervals, there will be no synchronizing delay. The logger will start immediately with the last defined logging interval.

6. When the relaunch has completed, the green LED blinks for 15 minutes, or until you momentarily press the coupler lever to stop it (press hard enough so the lever bends). If the red LED blinks instead, there was an error, and the logger may have stopped. Refer to "Troubleshooting" in this manual for details.
7. Remove the logger from the coupler.

Checking Shuttle Status in the Field

The shuttle's memory has 63 "banks." One logger readout can be stored in each bank. To check the shuttle's memory and batteries in the field, remove the logger and press the coupler's lever for at least three seconds (pressing hard enough so the lever bends). When you release the lever, the green LED blinks once for each unoccupied bank in the shuttle's memory. (Press the lever momentarily to stop the blinking, pressing hard enough so the lever bends.)

If the shuttle's batteries are running low, all of the shuttle banks are full, or the clock has not been set, the red LED blinks. (Press the lever momentarily to stop the blinking, pressing hard enough so the lever bends) Use HOBOware to check the shuttle's battery level, available memory, and clock. You may need to change the batteries, or offload the datafiles to the host computer and delete them from the shuttle to free up memory before you can continue reading out loggers.

Offloading Data to the Host Computer

You can offload the data stored in the shuttle even when the batteries are depleted. Take the following steps:

1. Connect the shuttle to a host computer running HOBOware.
2. Follow the instructions in the *HOBOware User's Guide* to offload the new datafiles or access the **Manage Shuttle** dialog. The **Manage Shuttle** dialog shows you how many banks are occupied, and whether they have already been offloaded and saved to the host computer.
3. Offload and save data from the banks of your choice. Refer to the *HOBOware User's Guide* for details on saving datafiles offloaded from the shuttle.
4. Review the list of banks and delete any that are no longer needed. Make sure the battery level is good, and change the batteries now if they are weak. (If you change the batteries in the field, the shuttle's clock will stop, and the shuttle will not read out loggers.) Update the shuttle's clock, if necessary.
5. When finished, disconnect the shuttle from the computer and close the center cap securely.

Using the Shuttle as a Base Station

You can use the shuttle as a base station for any U-Series logger with an optic USB interface. (This function is available even when the batteries are depleted.) To use the shuttle as a base station:

1. Connect the shuttle to the host computer running HOBOware.
2. Attach a compatible logger and coupler.
3. Momentarily press the coupler's lever (pressing hard enough so the lever bends).
4. The amber LED blinks momentarily, then the green LED should glow steadily to indicate that the logger is ready to communicate with HOBOware. (If the red LED blinks instead, the logger was not found. Make sure the logger and coupler are aligned and seated properly, and that there is no dirt or strong sunlight interfering with communications.)
5. When finished, remove the logger from the coupler. The green LED stops glowing when you disconnect the logger or the USB cable.

Important: The Waterproof Shuttle cannot be used *as a base station* with Pendant logger models UA-001 and UA-003 (including rain gauges RG3 and RG3-M) with serial numbers less than 988278. These loggers require a BASE-U-1 for communication with the host computer.

Indicator Lights

Green "OK" LED
The green "OK" LED blinks when HOBOware recognizes it as a base station; when it finishes reading out and relaunching a logger; and when you press the coupler lever to check the shuttle's status (see "Checking shuttle status in the field" for details). Momentarily press the coupler lever to stop the blinking (pressing hard enough so the lever bends).

The green LED glows steadily when the shuttle is being used as a base station.

Amber "Transfer" LED
The amber "Transfer" LED blinks when the shuttle is reading out a logger and relaunching it. Do not remove the logger when the Transfer light is lit.

Red "Fail" LED
The red "Fail" LED blinks whenever the shuttle encounters an error condition. Refer to "Troubleshooting" for details.

All LEDs
All LEDs blink in unison when the shuttle has just been powered up, either by installing fresh batteries or (if batteries are not installed) by connecting to the computer's USB port.

Troubleshooting

This section describes problems you may encounter while using the shuttle.

Shuttle is not recognized by host computer
If HOBOware does not recognize the shuttle when you connect it to the computer, simply disconnect and reconnect the shuttle.

Red "Fail" LED blinks
The red "Fail" LED blinks (for 15 minutes, or until you press the coupler lever, pressing hard enough so the lever bends) whenever the shuttle encounters an error. There are several conditions that might cause an error:

- **Shuttle is full:** If the red LED blinks when you try to read out a logger, check whether all of the banks are full, as described in "Checking shuttle status in the field." Or, use HOBOware to check the shuttle's memory.
- **Shuttle batteries are low:** If you cannot read out any loggers at all, check the logger's status, as described in "Checking shuttle status in the field," or use HOBOware to check the shuttle's batteries. The batteries may simply need to be replaced.
- **Compatibility:** The shuttle cannot read out or relaunch loggers that were last launched from HOBOware prior to version 2.2. You will need to read out these loggers on the host computer and relaunch them in HOBOware 2.2 or greater before you can use them with the shuttle.
- **Shuttle clock is not set:** The shuttle has experienced a power failure that caused the clock to reset. You must use HOBOware to offload the files that are already on the shuttle, then relaunch the shuttle before you can read out another logger.
- **Can't communicate with logger:** Remove the logger and coupler. Inspect them and the shuttle to ensure that all are free of dirt that could block the optic communication sensor. Carefully reassemble the shuttle, coupler, and logger, and make sure they are all seated properly. Shield the shuttle from strong sunlight, if applicable, which can interfere with optic communications.
- **Other logger problems:** If you can read out some loggers but not others, or if you cannot read out any loggers even with fresh batteries in the shuttle, check the loggers in HOBOware. Make sure their batteries are at acceptable levels and that there is no "corrupted header" message.

Amber "Transfer" LED stays on without blinking
The amber light is magnetically activated when you press the coupler lever. If it glows steadily at any other time, the magnet in the lever may be too close to the magnetic switch in the shuttle, or another strong magnet may be present. Try bending the lever away from the coupler to reduce the magnet's effect.

LEDs do not function
If the LEDs are not functioning at all, the batteries may be completely exhausted. To test this, attach the shuttle to the host computer and check the battery level. The shuttle should be able to communicate with the host computer, blink its LEDs normally, and perform as a base station even when the batteries are missing or depleted.

Replacing the Shuttle's Batteries

The shuttle's batteries should last about one year or at least 50 complete memory fills in typical conditions. When the shuttle's batteries run low (2.2 V or less), any logger data that is already in the shuttle will remain safe, but the shuttle will not read out another logger until its batteries are replaced.

To avoid battery problems, always check the shuttle's batteries in HOBOware before going into the field, and replace them if needed. If you cannot replace the bad batteries right away, you should remove them as soon as possible to ensure that they do not leak and damage the shuttle.

To change the shuttle's batteries:

1. Work over a clean surface to provide a safe platform for the disassembly.
2. Unscrew the center cap on the shuttle. If the cap is too tight to loosen by hand, insert a screwdriver through the lanyard hole and rotate counterclockwise until the cap is loosened.
3. Use the center cap to help you carefully pull the rubber loop free of the large cap. The large cap cannot be removed while the rubber loop is in place.

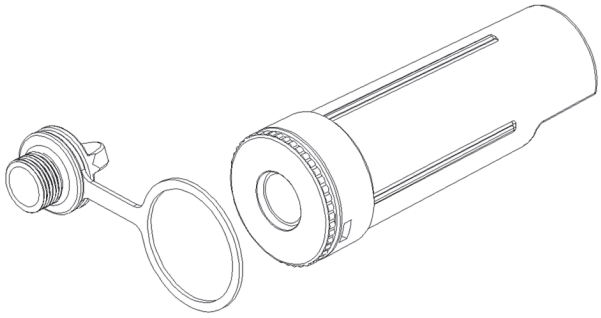

4. Turn the large cap counter-clockwise slightly, then pull it off.

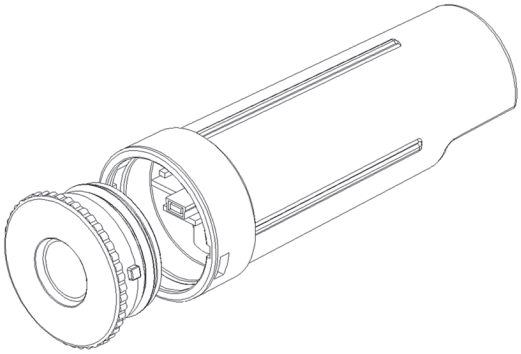

5. Turn the shuttle over and tap it gently. The circuit board should slide into your hand.

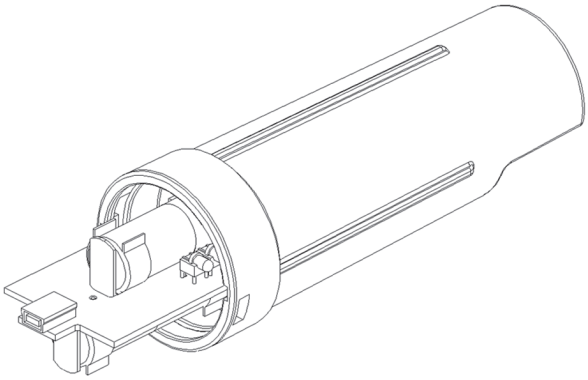

6. Remove the old batteries and install two new ones in the correct orientation. Both batteries should be turned the same way, with their positive ends facing the USB port on the board. (When the second battery makes contact, all of the shuttle's LEDs will blink in unison.) It is recommended that you replace the desiccant (DESICCANT2) when replacing the batteries.
7. Put the board back into the case, taking care not to bend the communication LEDs. Align the circuit board with the runners in the case. The USB port should face the open end of the shuttle, and the LEDs should show through the window on the label.
8. Close the shuttle's case. Line up the tabs on the large cap with the slots on the case, press gently, and turn slightly clockwise until the large cap is closed securely.
9. Replace the rubber loop and center cap. Tighten the center cap until it is just flush with the large cap, or until the O-ring is no longer visible.
10. Using HOBOware, offload any datafiles that are on the shuttle and launch the shuttle before going into the field again. The shuttle will not read out and relaunch loggers until the clock has been synchronized.

WARNING: Do not install batteries backwards, recharge, put in fire, expose to extreme heat, or mix with other battery types, as the batteries may explode or leak. Contents of an open or leaking battery can cause chemical burn injuries. **Replace all used batteries at the same time.** Recycle or dispose of batteries according to applicable federal, state, and local regulations.

HOBO® Water Temp Pro v2 (U22-001) Manual

The HOBO Water Temp Pro v2 logger is designed with a durable, streamlined, UV-stable case for extended deployments measuring temperature in fresh or salt water. The small size of the logger allows it to be easily mounted and/or hidden in the field. It is waterproof up to 120 m (400 feet) and rugged enough to withstand years of use, even in stream conditions. It has enough memory to record over 42,000 12-bit temperature measurements.

The logger uses an optical USB communications interface for launching and reading out the logger. The optical interface allows the logger to be offloaded without compromising the integrity of the seals. The USB compatibility allows for easy setup and fast downloads.

HOBO Water Temp Pro v2

U22-001

Included Item:

- Communications window protective cap

Required Items:

- Coupler (COUPLER-C) and USB Optic Base Station (BASE-U-4)
  or
  HOBO Waterproof Shuttle (U-DTW-1)
- HOBOware® (go to www.onsetcomp.com/hoboware-free-download)

Accessories:

- Protective boot; black (BOOT-BLK) or white (BOOT-WHT)
- Replacement communications window protective caps (U22-U24-CAP)

Specifications

Temperature Sensor

Operation Range	-40° to 70°C (-40° to 158°F) in air; maximum sustained temperature of 50°C (122°F) in water
Accuracy	±0.21°C from 0° to 50°C (±0.38°F from 32° to 122°F), see Plot A
Resolution	0.02°C at 25°C (0.04°F at 77°F), see Plot A
Response Time (90%)	5 minutes in water; 12 minutes in air moving 2 m/sec (typical)
Stability (Drift)	0.1°C (0.18°F) per year

Logger

Real-time Clock	± 1 minute per month 0° to 50°C (32° to 122°F)
Battery	2/3 AA, 3.6 Volt Lithium, factory-replaceable ONLY
Battery Life (Typical Use)	6 years with 1 minute or greater logging interval
Memory (Non-volatile)	64K bytes memory (approx. 42,000 12-bit temperature measurements)
Weight	42 g (1.5 oz)
Dimensions	3.0 cm (1.19 in.) maximum diameter, 11.4 cm (4.5 in.) length; mounting hole 6.3 mm (0.25 inches) diameter
Wetted Materials	Polypropylene case, EPDM o-rings, stainless steel retaining ring
Buoyancy (Fresh Water)	+13 g (0.5 oz.) in fresh water at 25°C (77°F); +17 g (0.6 oz.) with optional boot
Waterproof	To 120 m (400 ft.)
Shock/Drop	1.5 m (5 ft.) drop at 0°C to 70°C (32°F to 150°F)
Logging Interval	Fixed-rate or multiple logging intervals, with up to 8 user-defined logging intervals and durations; logging intervals from 1 second to 18 hours. Refer to the HOBOware software manual.
Launch Modes	Immediate start and delayed start
Offload Modes	Offload while logging; stop and offload
Battery Indication	Battery voltage can be viewed in status screen and optionally logged in datafile. Low battery indication in datafile.
Environmental Rating	IP68
NIST Certificate	Available for additional charge
CE	The CE Marking identifies this product as complying with all relevant directives in the European Union (EU).

Specifications (continued)

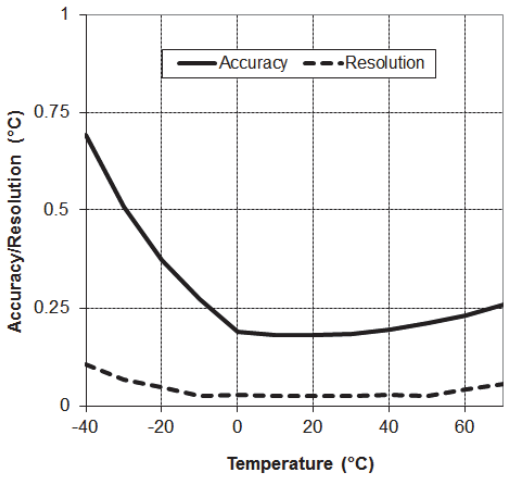

Plot A

Connecting the Logger

The HOBO Water Temp Pro v2 requires a coupler and USB Optic Base Station or HOBO Waterproof Shuttle to connect to the computer.

1. Install the logger software on your computer before proceeding.
2. Follow the instructions that came with your base station or shuttle to attach the base station or shuttle to a USB port on the computer.
3. Make sure the logger's communications window is clean and dry. (Use a clean, nonabrasive cloth, if necessary.) If the logger is wet, wipe off excess moisture.
4. Attach the coupler to the base station or shuttle, then insert the logger into the coupler so that the bump on the logger slides into the groove of the coupler. There is also an arrow etched on the logger case showing the direction the logger should be inserted into the coupler.

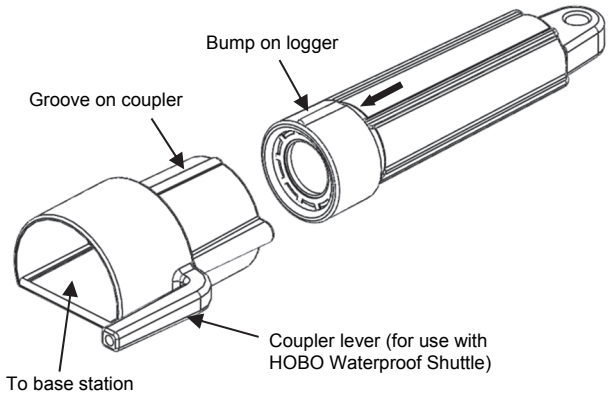

If you are using an older model of this logger and the arrow is not visible, hold the curved side of the coupler up as shown above. Insert the logger with the flat side up (the side in line with the flat side of the mounting hole).

5. If you are using the HOBO Waterproof Shuttle, briefly press the coupler lever to put the shuttle into base station mode.
6. If the logger has never been connected to the computer before, it may take a few seconds for the new hardware to be detected by the computer.
7. Use the logger software to launch the logger. You can check the logger's status, read out the logger while it continues to log, stop it manually with the software, or let it record data until the memory is full.

Refer to the software user's guide for complete details on launching, reading out, and viewing data from the logger, including multiple logging intervals.

Important: USB communications may not function properly at temperatures below 0°C (32°F) or above 50°C (122°F).

Note: The logger consumes significantly more power when it is "awake" and connected to a base station or shuttle. To conserve power, the logger will go into a low-power (sleep) mode if there has been no communication with your computer for 30 minutes. To wake up the logger, remove the logger from the coupler, wait a moment, then re-insert the logger.

Note: The first time you launch the logger, the deployment number will be greater than zero. Onset launches the loggers to test them prior to shipping.

Operation

A light (LED) in the communications window of the logger confirms logger operation. (In brightly lit areas, it may be necessary to shade the logger to see the LED blink.) The following table explains when the light blinks during logger operation:

When:	The Light Does this:
The logger is logging	Blinks once every one to four seconds (the shorter the logging interval, the faster the light blinks); blinks when logging a sample.
The logger is awaiting a start because it was launched in Start At Interval or Delayed Start mode	Blinks once every eight seconds until logging begins

Sample and Event Logging

The logger can record two types of data: samples and events. Samples are the sensor measurements recorded at each logging interval (for example, temperature every minute). Events are independent occurrences triggered by a logger activity, such as Bad Battery or Host Connected. Events help you determine what was happening while the logger was logging.

The logger stores 64K of data, and can record over 42,000 12-bit temperature measurements.

Deploying and Protecting the Logger

Follow these guidelines for deploying and protecting the logger:

Some monitoring applications require precise placement of the temperature sensor, such as measuring the temperature of a flow at the bottom of a stream or river. Ensure that the logger is appropriately secured so that the temperature sensor is in the desired measurement location.

Important: The plastic case will become brittle at temperatures lower than -20°C. If the logger is deployed in a location where the temperature drops below -20°C, make sure the logger remains stationary and is not pulled on or struck. Return the logger to above -20°C before handling.

- The opening at the sensor end of the logger accepts 1/4 inch (6.35mm) diameter nylon cord or other strong cable. If wire is wrapped through the sensor end to secure the logger, make sure the wire loop is snug to the sensor end. Any slack in the loop may cause excessive wear.
- The logger is slightly positive buoyant so that it will float if it is inadvertently dropped in the water or breaks free from its mooring. You may want to mark or label the logger with contact information in case the logger is lost.
- Use the included cap to protect the communications window in the logger from fouling and abrasion. Place the protective cap over the communications window before deploying the logger.
- As an alternative to the included protective cap, use the optional boot (Part # BOOT-BLK or BOOT-WHT) for high fouling environments and for protection against very cold temperatures (which can make the case brittle and prone to fracture) or repeated pounding and abrasion caused by turbulent flow. The boot slides over the logger, has a removable end cap, and is flexible enough to allow you to attach the coupler without removing the boot. To attach the base station, remove the end cap and firmly insert the logger until the boot folds back. Insert the logger into the coupler so that the bump on the logger slides into the groove of the coupler as shown on page 2.

  Although the boot does not cover the sensor end of the logger, the temperature response time (to 90% of final value) in water increases slightly from 5 to 8 minutes due to the increased mass.
- Depending on water conditions and desired measurement location, the logger should be appropriately weighted, secured, and protected.
- An alternative to the optional boot in high fouling environments is to protect the logger with plastic wrap that can be removed and replaced as needed.
- This logger should not be immersed for extended periods in any liquid other than fresh or salt water. To do so may void the warranty (refer to the Service and Support section). If you have any questions about chemical resistance, call Onset.
- Prolonged exposure to chlorinated water is not recommended.
- To clean the logger, rinse it in warm water. Use a mild dishwashing detergent if necessary. Do not use harsh chemicals, solvents, or abrasives, especially on the communications window.

Battery

The battery in the HOBO Water Temp Pro v2 is a 3.6 Volt lithium battery. The battery life of the logger should be about six years. Actual battery life is a function of the number of deployments, logging interval, and operation/storage temperature of the logger. To obtain a six-year battery life, a logging interval of one minute or greater should be used and the logger should be operated and stored at temperatures between 0° and 25°C (32° and 77°F). Frequent deployments with logging intervals of less than one minute, and continuous storage/operation at temperatures above 35°C, will result in significantly lower battery life. For example, continuous logging at a one-second logging interval will result in a battery life of approximately one month.

The logger can report and log its own battery voltage. If the battery falls below 3.1 V, the logger will record a “bad battery” event in the datafile. If the datafile contains “bad battery” events, or if logged battery voltage repeatedly falls below 3.3 V, the battery is failing and the logger should be returned to Onset for battery replacement.

To have your logger’s battery replaced, contact Onset or your place of purchase for return arrangements. Do not open the case or attempt to replace the battery yourself. There are no user-serviceable parts inside. If you open the case, the warranty will be voided, and the logger may no longer be waterproof.

WARNING: Do not cut open, incinerate, heat above 100°C (212°F), or recharge the lithium battery. The battery may explode if the logger is exposed to extreme heat or conditions that could damage or destroy the battery case. Do not dispose of the logger or battery in fire. Do not expose the contents of the battery to water. Dispose of the battery according to local regulations for lithium batteries.

Patent #: 6,826,664

HOBO® Water Temp Pro v2 (U22-001) Quick Start

1 Open HOBOware software. (Get the latest software at www.onsetcomp.com/hoboware-free-download.)

2 Attach the USB Optic Base Station (BASE-U-4) or HOBO Waterproof Shuttle (U-DTW-1) to a USB port on the computer (refer to the hardware manual at www.onsetcomp.com/support/manuals for details).

3 Attach the coupler (COUPLER-C) to the base station or shuttle, then insert the logger into the coupler so that the bump on the logger slides into the groove of the coupler. There is also an arrow etched on the logger case showing the direction the logger should be inserted into the coupler. If you are using the HOBO Waterproof Shuttle, make sure it is connected to the USB port on the computer and briefly press the coupler lever to put the shuttle into base station mode. It may take a few seconds for new hardware to be detected by the computer.

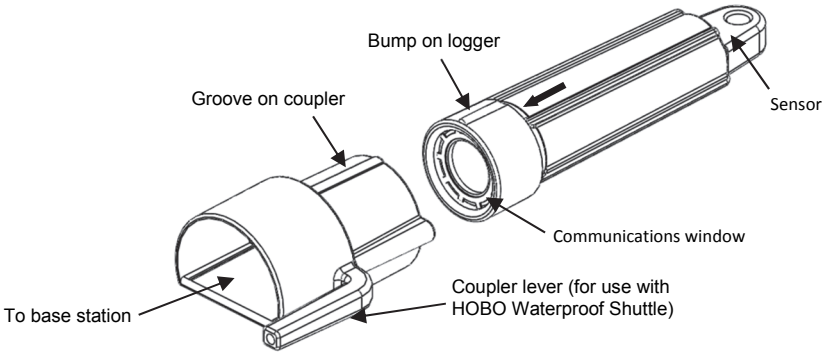

4 From the Device menu, select Launch. Select the logging options and click Start. Logging will begin based on the settings you selected.

5 Deploy the logger. Depending on water conditions and desired measurement location, the logger should be appropriately weighted, secured, and protected. Place the included cap over the communications window to protect it from fouling and abrasion or use the optional boot (BOOT-BLK or BOOT-WHT) for high fouling environments and for protection against very cold temperatures (which can make the case brittle and prone to fracture) or repeated pounding and abrasion caused by turbulent flow. See the logger manual at www.onsetcomp.com/support/manuals/u22-001 for complete deployment details.

6 To read out the logger, remove it from the water. Follow steps 1–3 and select Read Out from the Device menu in HOBOware or use the Waterproof Shuttle. Refer to the HOBOware Help for complete details on reading out and viewing data.

For more information about this logger, scan the code at left or go to www.onsetcomp.com/support/manuals/u22-001.

1-800-LOGGERS (564-4377) • 508-759-9500
www.onsetcomp.com/support/contact

This product has been manufactured by Onset Computer Corporation and in compliance with Onset's ISO 9001:2015 Quality Management System.

21827-B MAN-U22-QSG

HOBO® U20L Water Level Logger (U20L-0x) Manual

The HOBO U20L Water Level Logger is used for monitoring changing water levels in a wide range of applications, including streams, lakes, wetlands, tidal areas, and groundwater. Using HOBOware® Pro, you can easily configure this logger to record absolute pressure and temperature data. This logger features a ceramic pressure sensor, durable housing, and a protective end cap for deployment in existing wells or stilling wells. Without cumbersome vent tubes or desiccants to maintain, this easy-to-use logger is an ideal solution for water level studies and research.

HOBO Water Level Logger

Models:

- U20L-01 (30-foot depth)
- U20L-02 (100-foot depth)
- U20L-04 (13-foot depth)

Required Items:

- Coupler (COUPLER2-C) with USB Optic Base Station (BASE-U-4) *or*
  HOBO Waterproof Shuttle (U-DTW-1, firmware version 3.2.0 or later)*
- HOBOware® Pro, version 3.5 or higher

Accessories:

- Cable (CABLE-1-300 or CABLE-1-50) and Cable Crimp (CABLE-1-CRIMP)
- Replacement Coupler (COUPLER2-C)

**If shuttle firmware version 3.2.0 or later is needed, see the Onset website or contact Onset Technical Support.*

Specifications

Pressure (Absolute) and Water Level Measurements U20L-01

Operation Range	0 to 207 kPa (0 to 30 psia); approximately 0 to 9 m (0 to 30 ft) of water depth at sea level, or 0 to 12 m (0 to 40 ft) of water at 3,000 m (10,000 ft) of altitude
Factory Calibrated Range	69 to 207 kPa (10 to 30 psia), 0° to 40°C (32° to 104°F)
Burst Pressure	310 kPa (45 psia) or 18 m (60 ft) depth
Water Level Accuracy*	Typical error: ±0.1% FS, 1.0 cm (0.03 ft) water Maximum error: ±0.2% FS, 2.0 cm (0.06 ft) water
Raw Pressure Accuracy**	±0.3% FS, 0.62 kPa (0.09 psi) maximum error
Resolution	<0.02 kPa (0.003 psi), 0.21 cm (0.007 ft) water
Pressure Response Time (90%)***	<1 second at a stable temperature; measurement accuracy also depends on temperature response time

Pressure (Absolute) and Water Level Measurements U20L-02

Operation Range	0 to 400 kPa (0 to 58 psia); approximately 0 to 30.6 m (0 to 100 ft) of water depth at sea level, or 0 to 33.6 m (0 to 111 ft) of water at 3,000 m (10,000 ft) of altitude
Factory Calibrated Range	69 to 400 kPa (10 to 58 psia), 0° to 40°C (32° to 104°F)
Burst Pressure	500 kPa (72.5 psia) or 40.8 m (134 ft) depth
Water Level Accuracy*	Typical error: ±0.1% FS, 3.0 cm (0.1 ft) water Maximum error: ±0.2% FS, 6.0 cm (0.2 ft) water
Raw Pressure Accuracy**	±0.3% FS, 1.20 kPa (0.17 psi) maximum error
Resolution	<0.04 kPa (0.006 psi), 0.41 cm (0.013 ft) water
Pressure Response Time (90%)***	<1 second at a stable temperature; measurement accuracy also depends on temperature response time

Pressure (Absolute) and Water Level Measurements U20L-04

Operation Range	0 to 145 kPa (0 to 21 psia); approximately 0 to 4 m (0 to 13 ft) of water depth at sea level, or 0 to 7 m (0 to 23 ft) of water at 3,000 m (10,000 ft) of altitude
Factory Calibrated Range	69 to 145 kPa (10 to 21 psia), 0° to 40°C (32° to 104°F)
Burst Pressure	310 kPa (45 psia) or 18 m (60 ft) depth
Water Level Accuracy*	Typical error: ±0.1% FS, 0.4 cm (0.013 ft) water Maximum error: ±0.2% FS, 0.8 cm (0.026 ft) water
Raw Pressure Accuracy**	±0.3% FS, 0.43 kPa (0.063 psi) maximum error
Resolution	<0.014 kPa (0.002 psi), 0.14 cm (0.005 ft) water
Pressure Response Time (90%)***	<1 second at a stable temperature; measurement accuracy also depends on temperature response time

Specifications (continued)

Temperature Measurements (All Models)

Operation Range	-20° to 50°C (-4° to 122°F)
Accuracy	±0.44°C from 0° to 50°C (±0.79°F from 32° to 122°F), see Plot A
Resolution	0.10°C at 25°C (0.18°F at 77°F), see Plot A
Response Time (90%)	10 minutes in water (typical)
Stability (Drift)	0.1°C (0.18°F) per year

Logger

Real-time Clock	±1 minute per month 0° to 50°C (32° to 122°F)
Battery	2/3 AA, 3.6 Volt lithium, factory-replaceable
Battery Life (Typical Use)	5 years with 1 minute or greater logging interval
Memory (Non-volatile)	64K bytes memory (approx. 21,700 pressure and temperature samples)
Weight	Approximately 154 g (5.43 oz) in air Approximately 53.9 g (1.9 oz) in fresh water
Dimensions	3.18 cm (1.25 inches) diameter, 15.24 cm (6.0 inches) length; mounting hole 6.3 mm (0.25 inches) diameter
Wetted Materials	Polypropylene housing and lanyard; Viton and Buna-N O-rings; ceramic sensor in acetal end cap; stainless steel screws suitable for saltwater
Logging Interval	Fixed-rate or multiple logging intervals, with up to 8 user-defined logging intervals and durations; logging intervals from 1 second to 18 hours. Refer to the *HOBOware User's Guide* for details.
Launch Modes	Immediate start and delayed start
Offload Modes	Offload while logging; stop and offload
Battery Indication	Battery voltage can be viewed in status screen and optionally logged in datafile. Low battery indication in datafile.
Environmental Rating	IP68
CE	The CE Marking identifies this product as complying with all relevant directives in the European Union (EU).

* Water Level Accuracy: With accurate reference water level measurement, known water density, accurate Barometric Compensation Assistant data, and a stable temperature environment.

** Raw Pressure Accuracy: Absolute pressure sensor accuracy includes all sensor drift, temperature, and hysteresis-induced errors.

*** Changes in Temperature: Allow 20 minutes in water to achieve full temperature compensation of the pressure sensor. Maximum error due to rapid thermal changes is approximately 0.5%.

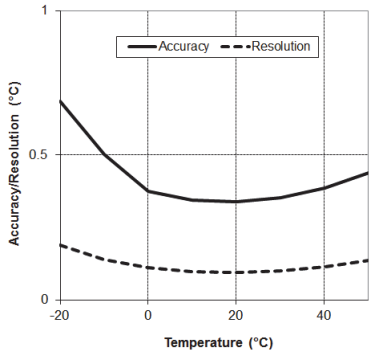

Plot A

Logger Operation

HOBOware Pro software is required for logger operation. Using a reference water level, HOBOware Pro automatically converts pressure readings into water level readings (see *Barometric Compensation* for more detail). The software also supports compensation for temperature, fluid density, and barometric pressure.

An LED in the communications window of the logger confirms logger operation. When the logger is logging, the LED blinks once every one to four seconds (the shorter the logging interval, the faster the LED blinks). The LED also blinks when the logger is recording a sample. When the logger is awaiting a start because it was configured to start "At Interval," "On Date/Time," or "Using Coupler," the LED blinks once every eight seconds until logging begins.

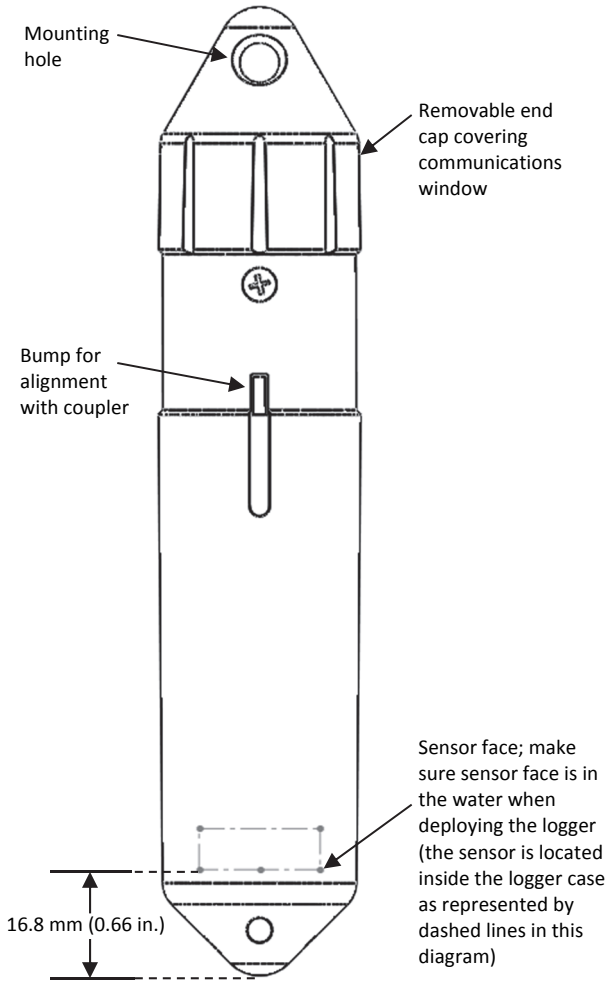

The logger can record two types of data: samples and events. Samples are the sensor measurements recorded at each logging interval (for example, the pressure every minute). Events are independent occurrences triggered by a logger activity, such as Bad Battery or Host Connected. Events help you determine what was happening while the logger was logging.

Barometric Compensation

The logger records absolute pressure, which is later converted to water level readings by HOBOware Pro software. In this application, absolute pressure includes atmospheric pressure and water head. Atmospheric pressure is nominally 100 kPa (14.5 psi) at sea level, but it changes with weather and altitude. Left uncompensated, barometric variations could result in errors of 0.6 m (2 ft) or more.

To compensate for barometric pressure changes, you can use another HOBO U20L Water Level logger as a barometric reference. The barometric reference is typically deployed in the same well or at the same location as the water level of interest, but rather than being placed in the water column, it is deployed above the water in air.

Barometric pressure readings are consistent across a region (except during fast-moving weather events), so you can generally use barometric pressure readings that are taken within 15 km (10 miles) of the logger or more without significantly degrading the accuracy of the compensation.

Therefore, one HOBO U20L or U20 Water Level logger or weather station (HOBO U30 recommended) can be used to compensate all the water level loggers in an area. The U20L-01 model with its 0–9m (0–30 ft) range or the U20L-04 with its 0–4 m (0–13 ft) range are both good barometric references due to their smaller range and temperature-compensated accuracy. HOBOware Pro includes a Barometric Compensation Assistant for easy and accurate barometric compensation. See *Processing Water Level Data using Barometric Pressure Data* for more details.

Calibration

The pressure sensor in each HOBO U20L Water Level logger is individually calibrated. During calibration, raw pressure sensor data is collected at multiple pressures and temperatures over the calibrated range of the logger (see the specifications table). This data is used to generate calibration coefficients that are stored in the logger's non-volatile memory. The calibration coefficients are then checked to be sure that the logger meets its stated accuracy over the calibrated range.

The pressure sensor can be used at pressures and temperatures that are outside of the calibrated range, but the accuracy cannot be guaranteed.

Important: Never exceed the burst pressure of the sensor!

Connecting the Logger to a Computer

The HOBO Water Level Logger requires a coupler (COUPLER2-C) and Optic Base Station (BASE-U-4) or HOBO Waterproof Shuttle (U-DTW-1, firmware version 3.2.0 or later) to connect to the computer. The optical interface allows the logger to be offloaded without breaking the integrity of the seals. The USB compatibility allows for easy setup and fast downloads.

Important: USB communications may not function properly at temperatures below 0°C (32°F) or above 50°C (122°F).

1. Follow the instructions that came with your base station or shuttle to attach it to a USB port on the computer.
2. Unscrew the black plastic end cap from the logger by turning it counter-clockwise. **Note:** If the logger has been deployed, there may be water in the end cap. This is normal; this water will not penetrate the waterproof seal around the communications window in the logger.
3. Attach the coupler to the base station or shuttle.
4. Insert the logger into the coupler so that the alignment bump on the logger slides into the alignment bump on the coupler. Be sure it is properly seated in the coupler. It may take a few seconds for the new hardware to be detected by the computer.

NOTE: If you are using the Waterproof Shuttle, briefly press the coupler lever to put the shuttle into base station mode.

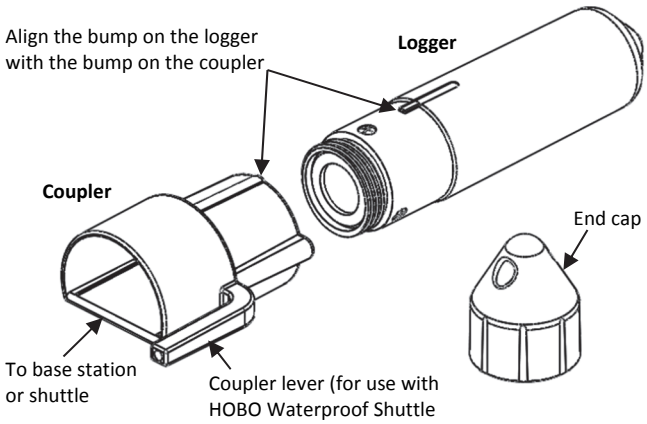

If the logger has never been connected to the computer before, it may take a few seconds for the new hardware to be detected by the computer.

WARNING: Do not leave the logger in the coupler for extended periods of time. When connected to a coupler, the logger is "awake" and consumes significantly more power than when it is disconnected and considered "asleep." Always remove the logger from the Optic Base Station or HOBO Waterproof Shuttle as soon as possible after launching, reading out, or checking the status to avoid draining the battery. To "wake up" the logger, remove it from the coupler, wait a moment and then re-insert the logger.

Launching the Logger

Before deploying the HOBO U20 Water Level Logger in the field, perform the following steps in the office:

1. Open HOBOware.
2. Connect the logger to the computer as described in the previous section.
3. From the Device menu, select Launch.
4. In the Launch Logger window, make sure both the Abs. Pressure and Temperature sensors are selected (temperature is required for temperature compensation of pressure).
5. Select any other launch settings as desired, including when to start logging and the logging interval. Click the Start button in the lower right corner of the Launch Logger window to send the launch settings to the logger (note that the Start button text changes based on the Start Logging selection).

Deploying the Logger

The HOBO Water Level Logger is designed to be easy to deploy in many environments. The logger uses an absolute pressure sensor, so no vent tube is required. The small size of the logger is convenient for use in small wells and allows the logger to be mounted and/or hidden in the field. Follow these guidelines when deploying the logger:

- The pressure sensor is temperature compensated over the range of 0° to 40°C (32° to 104°F). To obtain the highest level of accuracy, the logger should be allowed to come to full temperature equilibrium (approximately 20 minutes) before the reference level is recorded.
- Sudden temperature changes should be avoided. When deploying a HOBO U20L Water Level Logger for barometric pressure reference, some consideration should be made to minimize the rate of temperature fluctuations. Ideally, the barometric pressure reference logger should be hung several feet below ground level in an observation well where ground temperatures are stable (while making sure the logger remains above the water level). If that is not possible (or if a well is not used), try to put the logger in a location where it will not be subject to rapid daily temperature cycles.
- When deploying a HOBO Water Level logger in a well, make sure the well is vented to the atmosphere. Typically, a small hole can be drilled in the well cap to ensure that the pressure inside and outside the well is at equilibrium. If this is not possible, the barometric pressure reference logger should be used inside the same well.
- Use a no-stretch wire to hang the water level logger. Any change in length of the wire will result in a 1-to-1 corresponding error in the depth measurement. Always pull-test a cable prior to deploying a logger in a well to make sure it does not stretch.
- If you are deploying the logger in a lake, river, or stream, you must first build a stilling well to protect the logger from vibration, shock, and movement. A simple stilling well can be constructed with PVC or ABS pipe. A properly constructed stilling well helps to protect the logger from currents, wave action, and debris. Suspend the logger in the stilling well so it is always underwater, but not on the bottom to be buried by silt.

  For more information, see the Technical Application Note for Constructing a Stilling Well at: http://www.onsetcomp.com/water_level_stilling_well.html
- To prevent the logger from moving in currents and to ensure the support cable is kept straight during deployment, you may need to add a weight to the suspension cable or hang a weight below the logger.

Alternatively, you could deploy the logger in a stilling well as described above.

- Be very careful not to exceed the burst pressure for the logger. The pressure sensor will burst if the maximum depth is exceeded (see specifications table). The logger should be positioned at a depth where the logger will remain in the water for the duration of the deployment, but not exceed the rated bursting depth.

To deploy the logger:

1. Cut wire to suspend logger.
   a. Measure the physical depth to the surface of the water from the suspension point.
   b. Cut a piece of stranded, stainless steel wire (Teflon coated is best) so that the logger will be deep enough to always be in the water. Estimate the low water level and make the cable length such that the logger will be about 2 feet below that level.
2. Attach the wire to the suspension point and to the logger cap.
3. Relaunch the logger if desired (if a laptop or a HOBO U-Shuttle is available).
4. Lower the logger into the well or stilling well.

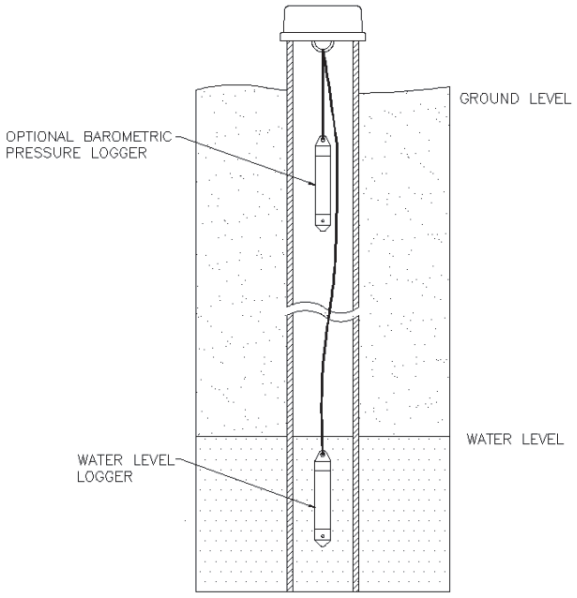

5. Measure the water depth from the desired reference point (top of pipe, ground level, or sea level).
   - To maximize accuracy, allow 20 minutes after deploying the logger before measuring water depth to allow the logger to reach temperature equilibrium with the water.
   - If the well is too small in diameter to measure the water depth after deployment, measure the water depth before deployment, then deploy the logger immediately and record deployment time.
   - For well deployments: If the water level surface is below the reference point (such as referencing groundwater measurements to the top of the well), record the water level as a negative number. If the water level surface is above the reference point (such as height above sea level), record the water level as a positive number.
   - For lake, stream, and river deployments: If the water level is being referenced to some point above the logger (such as the top of the stilling well), record the water level as a negative number. If the water depth is being referenced to a point below the water surface such as the bottom of the stream, record the water level as a positive number.
6. Record the reference measurement date and time.

Deploying a Water Level Logger for Barometric Pressure Data (Optional)

If you are using a U20 or U20L logger to record barometric pressure data, install one logger in one of the wells as follows:

1. Cut wire for suspending the logger.
   a. Measure the physical depth to the surface of the water from the suspension point.
   b. Cut a piece of stranded, stainless steel wire (Teflon coated is best) so that the logger will hang about 2 feet below the ground surface but always above the water surface.
2. Attach the wire to the suspension point and to the logger cap.
3. Relaunch the logger if desired (if a laptop or a HOBO U-Shuttle is available).
4. Lower the logger into the well or stilling well. Make sure the logger does not go below the water surface. See the diagram in the previous section.
5. Record the deployment time.

Reading Out the Logger

To read out the logger for water level data (see later in this section for steps to read out a water level logger used for barometric pressure data):

1. Measure the water depth using the original reference point with the correct sign.
2. Record depth and date and time.
3. Pull the logger out of the well.
4. Remove the logger from its cap, leaving the suspension undisturbed. Check the communications window for any fouling and wipe it off if necessary. **Note:** There may be water in the end cap. This is normal; this water will not penetrate the waterproof seal around the communications window in the logger.
5. Read out the data using a laptop or shuttle.
6. Save the data in a test folder location.
7. Redeploy the logger (optional) as described later in this section.

To read out a U20L logger used for barometric pressure data:

1. Remove the logger from the well.
2. Read out the data using a laptop or shuttle.

3. Save the data in a test folder location.
4. Redeploy the logger (optional) as described below.

If you are redeploying the logger, you must first make sure that it is launched. If you used the HOBO Waterproof Shuttle to offload data, the shuttle automatically performs a synchronized relaunch of the logger so that data is logged on the same measurement intervals. If you wish to change the launch settings, you must launch the logger using HOBOware Pro.

The existing suspension can be reused as long as the water level logger remained in the water and the barometric logger remained out of the water for the entire test interval. Take a new reference reading with the date and time as described in this section. Record this information in your field notebook to use later to calibrate the data, which will zero out any drift error.

Processing Water Level Data using Barometric Pressure Data

To determine water level using barometric pressure data, use the Barometric Compensation Assistant in HOBOware Pro as described below.

If you are using barometric pressure data from a HOBO weather station, you can use the data file as if it were U20L barometric data. For data from sources other than Onset products, see *Barometric Data from Other Sources* below.

1. In HOBOware Pro, open the water depth data file. The Plot Setup window appears.
2. Uncheck all boxes except “Abs. Pressure. “
3. Run the Barometric Compensation Assistant.
   a. Select the assistant and click the Process button.
   b. Select the water density box that best describes the water that you are measuring or enter the actual water density.
   c. Check the Use a Reference Water Level box and enter the reference water level that you measured at the beginning of the deployment.

      Enter the water level as a positive number if it is measured upward from a reference point below the water's surface, such as the water's height above sea level. This illustration shows an example of when to enter the water level as a positive number.

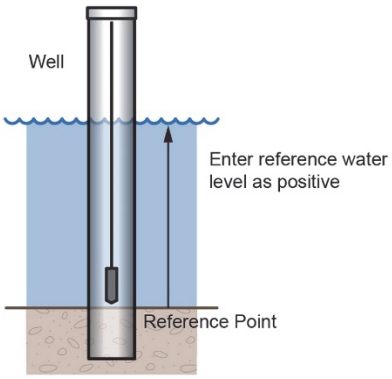

      Enter the water level as a negative number if it is measured downward from a reference point above the water's surface, such as the top of the well. This illustration shows an example of when to enter the water level as a negative number.

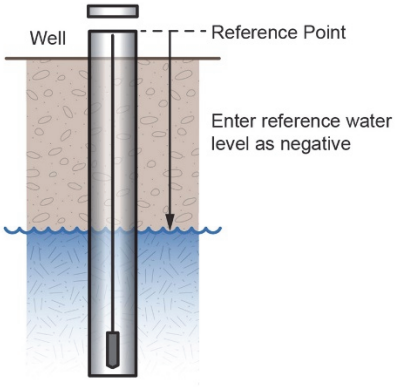

   d. Select the date and time from the pull-down menu that is closest to the recorded date/time for the measurement. If you measured the depth before deployment because of pipe size, then select a date/time after the start of the deployment.
   e. Check “Use Barometric Data file.”
   f. Click the Choose button. This will allow you to select the data file to use for barometric pressure compensation.
   g. Select and open the data file.
   h. Click the Create New Series button. A new Plot Setup window appears.
4. Select the Water Level checkbox and any other series that you want plotted. Click the Plot button to obtain a plot of the resulting water level data.

Measurement error can be caused by manual measurement error, sensor drift, or change in the suspension cable length.

To quantify measurement error (which is ideally zero), compare the calculated water level at the end of the plot with the water level measured just before you removed the water level logger.

Barometric Data from Other Sources

If you choose to use barometric pressure from a third-party weather station or barometric logger, you need to convert the date, time, and pressure data to a text file with special header requirements. For information on how to set up the text file, see the HOBOware Help or User Guide. It is easiest to do this work in Microsoft® Excel® and then save it as a text file.

If you choose to use barometric pressure from an online weather station, such as the National Weather Service, the measured barometric pressure is modified to be at sea level. This sea level pressure is useable since all pressure offsets are zeroed when you enter the reference measurement.

When you select the barometric data file in the Barometric Pressure Assistant (see previous section), select the text file that you generated. Select tab or comma for the data format and data separation characters and then import the barometric data.

Maintenance

The logger requires the following periodic maintenance to ensure optimal operation:

- **Protect the logger. This logger can be damaged by shock.** Always handle the logger with care. The logger may lose its calibrated accuracy or be damaged if it is dropped. Use proper packaging when transporting or shipping the logger.

  Important: Do not attempt to open the logger housing! Unscrewing the nose cone of the logger will cause serious damage to the pressure sensor and logger electronics. There are no user serviceable parts inside the case. Contact Onset Technical Support if your logger requires servicing.

- **Periodically inspect the logger for biofouling**. Biological growth on the face of the pressure sensor will throw off the pressure sensor's accuracy. Organisms that grow inside the sensor nose cone and on the sensor itself can interfere with the sensor's operation and eventually make the sensor unusable. If the deployment area is prone to biofouling, check the logger periodically for marine growth.

- **Be careful of solvents.** Check a materials-compatibility chart against the wetted materials listed in the Specifications table before deploying the logger in locations where untested solvents are present. The logger has Viton and Buna-N O-rings, which are sensitive to polar solvents (acetone, ketone), ammonia, chlorine, and brake fluids. The sensor is housed in an acetal end cap. Acetal is resistant to most solvents, fuels, and lubricants. The black polypropylene cap is provided to help protect the communications window. The polypropylene communications window is sealed as an additional barrier to prevent water and dirt from entering the logger housing.

Compensating for Drift

All pressure sensors drift over time. The drift for the pressure sensor and electronics in the HOBO U20L Water Level logger is less than 0.5% FS (worst case) per year. In most applications, drift is not a significant source of error, because the offset created by any drift is zeroed out when you take a manual reference level measurement and use the logger software to automatically calculate the level readings relative to the reference measurement. In effect, you are re-zeroing the sensor each time you apply a reference reading to the data file.

Pressure sensor drift matters only when absolute pressure values are needed, or if there are no recent reference level or depth measurements available. For example, if the logger is deployed for one year and no new reference level readings are taken during the deployment, it is possible that the sensor could have drifted as much as 0.5% FS by the end of the deployment.

It is possible to determine the actual amount of drift during a deployment if a reference level is taken at the beginning and the end of a long-term deployment. The results of applying the two different reference levels (once at the beginning of the data file, and again at the end of the data file) can be compared. Any difference between the files indicates the amount of sensor drift (assuming accurate reference levels).

Verifying Accuracy

You can check the *differential accuracy* of your loggers for water level measurements by deploying the loggers at two depths and comparing the difference in level readings. When verifying the accuracy this way, be sure to allow the loggers' temperature to stabilize at each depth. Use the logger software to convert the readings from pressure to level. The level readings should be taken close enough together that the barometric pressure does not change.

You can check the *absolute pressure accuracy* of your HOBO U20L Water Level Logger by comparing its ambient pressure readings to a second HOBO logger. Their readings should be within each other's specified accuracy. Alternatively, you can check the pressure reading against an accurate local barometer. If you use a non-local source of barometric information, such as the NOAA website, adjust for altitude.

Battery Guidelines

The battery in the HOBO U20L Water Level Logger is a 3.6 Volt lithium battery.

- **Battery Life.** The battery life of the logger should be about five years or more. Actual battery life is a function of the number of deployments, logging interval, and operation/storage temperature of the logger. Frequent deployments with logging intervals of less than one minute, and continuous storage/operation at temperatures above 35°C will result in significantly lower battery life. For example, continuous logging at a one-second logging interval will result in a battery life of approximately one month.

  To obtain a five-year battery life, a logging interval of one minute or greater should be used and the logger should be operated and stored at temperatures between 0° and 25°C (32° and 77°F).

- Battery Voltage. The logger can report and log its battery voltage. If the battery falls below 3.1 V, the logger will record a "bad battery" event in the datafile. If the datafile contains "bad battery" events, or if logged battery voltage repeatedly falls below 3.3 V, the battery is failing and the logger should be returned to Onset for battery replacement.

- Replace the Battery. To have your logger's battery replaced, contact Onset or your place of purchase for return arrangements. Do not attempt to replace the battery yourself. Severe damage to the logger will result if the case is opened without special tools, and the warranty will be voided.

WARNING: Do not cut open, incinerate, heat above 100°C (212°F), or recharge the lithium battery. The battery may explode if the logger is exposed to extreme heat or conditions that could damage or destroy the battery case. Do not dispose of the logger or battery in fire. Do not expose the contents of the battery to water. Dispose of the battery according to local regulations for lithium batteries.

Quick Start for the HOBO® U20L Water Level Logger

Before you begin: Barometric pressure data at the site where the logger is being deployed is required for accurate water level data. Using a HOBO logger for recording barometric pressure data is recommended.

If using a HOBO Waterproof Shuttle (U-DTW-1) with this logger, the shuttle must have firmware version 3.2.0 or later installed. See the Onset website or contact Onset Technical Support if your shuttle needs this upgrade.

1 Open HOBOware® Pro software. (Install first if necessary.)

2 The HOBO Water Level Logger requires a coupler (COUPLER2-C) and USB Optic Base Station (BASE-U-4) or HOBO Waterproof Shuttle (U-DTW-1) to connect to the computer. Follow the instructions that came with your base station or shuttle to attach the base station or shuttle to a USB port on the computer.

1. Unscrew the black plastic end cap from the logger by turning it counter-clockwise.
2. Attach the coupler to the base station or shuttle.
3. Insert the logger into the coupler, aligning the bump on the coupler with the groove on the logger. Be sure it is properly seated in the coupler. It may take a few seconds for the new hardware to be detected by the computer.

Note: If you are using the HOBO Waterproof Shuttle, briefly press the coupler lever to put the shuttle into base station mode.

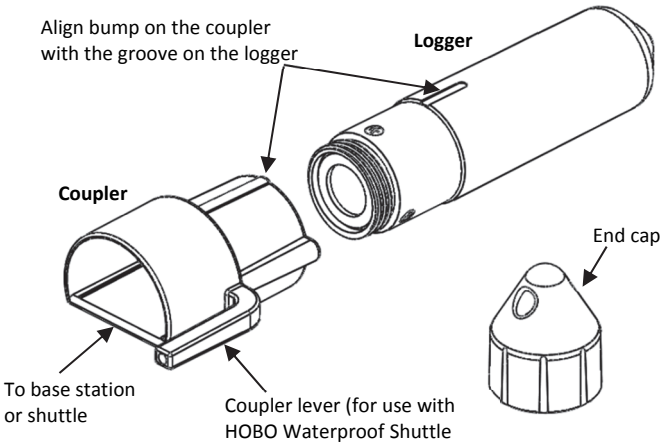

3 From the Device menu in HOBOware, select Launch and configure the launch settings. Make sure both the Abs. Pressure and Temperature sensors are selected (temperature is required for temperature compensation of pressure) and click the Start button in the lower right corner to send the launch settings to the logger. Note that the Start button text changes based on your Start Logging selection.

4 Deploy the logger, making sure the end cap is in place. Take water level reference readings at the beginning and end of each deployment.

5 Use the HOBO Waterproof Shuttle or base station to read out the logger.

6 Relaunch and redeploy logger as needed.

7 Plot data from logger. Print the plot, export data, save it as a project file, and more.

For detailed specifications and information about this logger, refer to the complete product manual. Go to http://www.onsetcomp.com/support/manuals/u20l_17153 or scan the code below.

1-800-LOGGERS (564-4377) • 508-759-9500
www.onsetcomp.com/support/contact

This product has been manufactured by Onset Computer Corporation and in compliance with Onset's ISO 9001:2015 Quality Management System.

17150-D MAN-QSG-U20L

Appendix C: City of Newberg HOBO®ware Equipment Inventory

City of Newberg Water Logger Summary

November 2019

Logger Number	Status	Logger Type	Watershed	Logger Location
10754884	Recovered - 2018	Water Temp Pro v2	Hess Creek	Hess at Aspen Way
10939122	Recovered - 2018	Water Level Logger	Springbrook	Springbrook at Benjamin Rd
10911415	Recovered - 2018	Water Level Logger	Springbrook	Springbrook at 219
10939121	Recovered - 2018	Water Level Logger	Hess Creek	Hess at 219 above Culvert
10911416	Recovered - 2018	Water Level Logger	Hess Creek	Hess at 219 - North Fork

Other Available Equiptment	Status	Logger Type
10988963	Not in use Summer of '18	Water Temp Pro v2
10972672	Not in use Summer of '18	Water Temp Pro v2
10988964	Not in use Summer of '18	Water Temp Pro v2
20099164	Not in use Summer of '18	Water Level Logger
20099163	Not in use Summer of '18	Water Level Logger

Appendix D: Field Equipment Checklist

Engineering Department

503-537-1273

City of Newberg

414 E. First Street

Newberg, OR 97132

TMDL Temperature Monitoring Field Equipment Checklist

- ✓ Temperature Probes/Water Level Loggers
- ✓ Maps/Data Sheets/etc.
- ✓ Water Logger Shields
- ✓ Clothesline Wire for Stilling Well/Weighted Plate Installations
- ✓ NIST Temperature Probe
- ✓ Camera/Phone with Waterproof Case
- ✓ Chest Waiters/Hip Boots
- ✓ Wadding Poles
- ✓ Machete w/Leather Gloves
- ✓ Loppers
- ✓ Hand Clippers
- ✓ Wire Cutters
- ✓ Multi-Tool
- ✓ Hat, Sunglasses, Sunscreen
- ✓ Rite in the Rain Notebook
- ✓ Backpack
- ✓ First Aid Kit
- ✓ Traffic cones x2
- ✓ Tape Measure
- ✓ Measuring Pole
- ✓ Towels/Drop Cloths for City Vehicle
- ✓ 5-gallon Bucket for Wet Gear
- ✓ Life Jacket/Reflective Safety Vest
- ✓ Site Access Keys
- ✓ Rope/T-Posts/T-Post Pounder
- ✓ Surveyors Marking Tape

Appendix E: HOBO®ware Pro License Key and Download Instructions

Kristen Svicarovich

From: Gabrielle McCarthy <Gabrielle_McCarthy@onsetcomp.com>
Sent: Friday, October 20, 2017 6:58 AM
To: Kristen Svicarovich
Subject: FW: Onset - HOBOware Pro

Good morning Kristen,

I do believe I did not have your email correct. I hope I have correct now. I apologize for the wait.

Please see below for software information.

Best regards,
Gabi

Gabrielle McCarthy
Customer Service Rep
Onset Computer Corporation
Direct 508.743.3192
Main 1.800.LOGGERS
Fax 508.759.9100
gabrielle_mccarthy@onsetcomp.com

ONSET
www.onsetcomp.com
Follow us

From: Gabrielle McCarthy
Sent: Tuesday, October 17, 2017 4:16 PM
To: 'kristen.svicarovitch@newbergoregon.gov'
Subject: FW: Onset - HOBOware Pro

Good afternoon, I mis-typed your email address below. I believe I have it right now.

My apologies.

Best regards,
Gabi

Gabrielle McCarthy
Customer Service Rep
Onset Computer Corporation
Direct 508.743.3192
Main 1.800.LOGGERS
Fax 508.759.9100
gabrielle_mccarthy@onsetcomp.com

ONSET
www.onsetcomp.com

Follow us

From: Gabrielle McCarthy
Sent: Tuesday, October 17, 2017 2:38 PM
To: 'kristen.svicarovitch@newbergoregon.edu'
Subject: Onset - HOBOware Pro

Good afternoon Kristen,

Thank you for your inquiry. I do see that the City of Newberg purchased the HOBOware Pro a couple of years ago. Please note the following information:

HOBOware License Keys

Here are your license key(s):

2665-3985-5938-9058

Instructions for License Keys

Download Software

We appreciate your business.

Best regards,
Gabi

Gabrielle McCarthy
Customer Service Rep
Onset Computer Corporation
Direct 508.743.3192
Main 1.800.LOGGERS
Fax 508.759.9100
gabrielle_mccarthy@onsetcomp.com

ONSET
www.onsetcomp.com
Follow us

Appendix F: Downloading Temperature Data Instructions

Engineering Department

503-537-1273

414 E. First Street

Newberg, OR 97132

Downloading Data from a Temperature Monitor

Below are instructions for downloading data from a temperature monitor. These instructions were written based on the actual experience of downloading data and the steps taken. Additional information about downloading data from temperature monitors can be found on the ONSITE HOBOware Pro® website or by referencing the *USGS, Monitoring Stream Temperatures, A Guide for Non-Specialists, 2018* manual.

Equipment Needed:

- HOBO® Water Temperature Pro v2 Data Logger or HOBO® Water Level (13 ft) Data Logger
- HOBO® Waterproof Shuttle and USB connector
- Computer with HOBOware Pro® software installed

Steps to Follow:

1. Open HOBOware Pro® on your computer. It should be noted that the software may need to be installed on a laptop. Previous problems arose trying to download the software onto the City's network.
2. Insert USB cord into computer and attach to the HOBO® Waterproof Shuttle
3. Attach the blue "ONSET coupler for U22/U22/U26/U20L" to the HOBO® Waterproof Shuttle
    a. HOBO® Water Temperature Pro v2 Data Logger – Line up "notch" with coupler to attach
    b. HOBO® Water Level (13 ft) Data Logger – Unscrew cap and then line up "notch" with the coupler to attach
4. Depress "side hook" on the blue coupler until the yellow transfer light turns on the HOBO® Waterproof Shuttle, then let go. The green light will then turn on when the data transfer is complete.
5. In HOBOware Pro®, check the bottom left corner of the screen, the devise should show up as registered i.e. "Dev: HOBO U20L-04 Water Level, S/N: 20099163"
6. At the top of the software program on your computer select "Device", then "Readout"
    a. A popup box will ask "Do you wish to stop logging before reading out the logger?"
    b. "Don't Stop" – if you're planning to do a beginning or end of season quality check
    c. "Stop" if you want to stop logging data (to save battery over the winter)
7. The logger data will then start to download onto the computer.
8. Once complete, safe the file
    a. SN_Location Description_Date (upload the date after the download to include the date range i.e. 2017_01_12_2017_05_06
    b. The saved file produces a ".hobo" file
9. In the Plot Setup Box select "Plot"

10. Then convert the file to a ".cvs" file
    a. "File" -> "Export Table Data" -> "Export" -> Save file with file name; ".csv" file is produced
11. Open the ".csv" file and then "save as" an "Excel Worksheet" file. Sometimes data will corrupt in a ".csv" file and comma separated data will revert back to a text file. It's important to safe ".csv" file to an Excel Worksheet to protect the data and to make future analysis of the data easier without having to use the HOBOware Pro® software.
12. While in HOBOware Pro® the data recording interval can be check along with the battery life of the loggers. Intervals should be set to collect at 5-minutes.
13. When completed be sure to tighten the waterproof cap over the USB port on the HOBO® Waterproof Shuttle. The shuttle can be used to collect data live in the field underwater, but the internal components are not waterproof so it's important that the waterproof cap is secure.

Appendix G: Temperature Monitoring Equipment Accuracy Check

Engineering Department

503-537-1273

414 E. First Street

Newberg, OR 97132

Monitoring Equipment Accuracy Check

To verify the accuracy of the HOBO® Water Temperature Pro v2 Data Logger and HOBO® Water Level (13 ft) Data Logger they must be checked both before deployment and after deployment. A testing procedure has been developed by the Oregon Watershed Enhancement Board (OWEB) to test equipment accuracy. The detailed steps of the accuracy check can be found below and in Chapter 6 of the *OWEB, Water Quality Monitoring Guidebook Version 2.0, July 1999.* Accuracy checks should be made at two temperatures; one between 5-15°C (42-62°F) and the other between 15-25°C (62-82°F). Testing is done using a stable thermal mass such as a water-filled cooler.

Equipment Needed:

- NIST (National Institute of Standards and Technology) traceable (calibrated and maintained) thermometer accurate to ±0.2°C. The City of Newberg borrows a NIST temperature monitor from the Greater Yamhill Watershed Council (GYWC) because their probe is calibrated on an annual basis as part of the Oregon Watershed Enhancement Board (OBEW).
- HOBO® Water Temperature Pro v2 Data Logger or HOBO® Water Level (13 ft) Data Logger
- Medium Size Cooler
- Paper or excel file to document temperature recordings
- Small weights to submerge temperature monitors
- Bag of ice
- Colander to hold temperature monitors under water

Steps to Follow:

1. The collection interval at which your temperature probe is set will dictate how long the accuracy check will take. If possible it is recommended to use 1-minute intervals.
2. Fill the cooler with water at your desired temperature (try 20°C Room Temperature and 0°C Ice Bath), ice or warm water may need to be added to adjust the temperature.
3. Put the NIST Temperature Probe wire into the cooler and gently shut the lid. Wait approximately 30-45 minutes for the water temperature to stabilize. Do not let the NIST Temperature Probe site on the bottom of the cooler.
4. Record NIST Temperature Probe temperatures every minute for 5 to 10-minutes. A 5-minute interval can also be used.
5. Download the temperature results from the temperature recorders and compare them to the NIST Temperature Probe readings (see next page for example). The average of both the NIST Temperature Probe readings and the temperature recorder readings should then be subtracted from one another to determine the difference.
6. Water temperatures should not vary more than ±0.5°C between the NIST recorded temperature and the data logger's temperature. Units not passing the accuracy test should not be used.
7. Keep the accuracy check data for pre and post deployment in the same folder with the raw data collected in the field.

Engineering Department
503-537-1273

414 E. First Street
Newberg, OR 97132

City Newberg Pre-Deploy Temp Bath Quality

20c Room Temp	Time		Logger & Temp							
		NIST	Chehalem Trib at Sunnycrest 10988964	Andrew Trib at Chehalem 10754884	Dayton at Chehalem 10754883	Sprinbrook at Benjamin 10939122	Springbrook at 219 10911415	Hess above Mtnview 20099163	Hess at 219 above culvert 10939121	Hess at 219 Nfork 10911416
5/23/2018	10:35	20.00	20.10	20.00	20.00	20.10	20.20	20.10	20.10	20.20
	10:40	20.00	20.20	20.00	20.00	20.00	20.00	20.00	20.00	20.10
	10:45	20.00	20.00	20.00	20.00	20.00	20.00	19.90	19.90	20.00
	Average	20	20.10	20.00	20.00	20.03	20.07	20.00	20.00	20.10
	Difference (+/- 0.5 C benchmark)	0	0.10	-	-	0.03	0.07	-	-	0.10

0c Ice Bath	Time		Logger & Temp							
		NIST	Chehalem Trib at Sunnycrest 10988964	Andrew Trib at Chehalem 10754884	Dayton at Chehalem 10754883	Sprinbrook at Benjamin 10939122	Springbrook at 219 10911415	Hess above Mtnview 20099163	Hess at 219 above culvert 10939121	Hess at 219 Nfork 10911416
5/23/2018	11:40	0.60	0.50	0.60	0.50	0.20	0.30	0.20	0.30	0.30
	11:45	0.70	0.60	0.70	0.60	0.30	0.50	0.30	0.30	0.30
	11:50	0.60	0.60	0.90	0.80	0.50	0.60	0.50	0.50	0.50
	11:55	0.60	0.70	0.70	0.60	0.50	0.60	0.50	0.50	0.50
	12:00	0.70	0.70	0.90	0.80	0.50	0.60	0.70	0.50	0.50
	12:05	0.90	0.90	1.00	1.00	0.60	0.70	0.80	0.60	0.60
	Average	0.68	0.67	0.80	0.72	0.43	0.55	0.50	0.45	0.45
	Difference (+/- 0.5 C benchmark)	0	(0.01)	0.12	0.04	(0.25)	(0.13)	(0.18)	(0.23)	(0.23)