VILLA ROAD IMPROVEMENTS, HAWORTH TO CRESTVIEW

PHASE 1 - CULVERT REPLACEMENTS - PROJECT NO. 702163

VOLUME 2

INDEX OF DRAWINGS

GENERAL

1	G-1	TITLE SHEET, INDEX OF DRAWINGS AND VICINITY MAP
2	G-2	GENERAL NOTES
3	G-3	SYMBOLS, LEGEND AND ABBREVIATIONS

CIVIL

4	C-1	PHASING PLAN
5	C-2	TEMPORARY WATER MANAGEMENT PLAN
6	C-3	CULVERT A PLAN & PROFILE
7	C-4	CULVERT A DOWNSTREAM CHANNEL GRADING
8	C-5	CULVERT A UPSTREAM CHANNEL GRADING
9	C-6	CULVERT B PLAN & PROFILE
10	C-7	CULVERT B DOWNSTREAM CHANNEL GRADING
11	C-8	CULVERT B UPSTREAM CHANNEL GRADING
12	C-9	COMPOSITE UTILITY PLAN
13	C-10	DETAILS
14	C-11	DETAILS
15	C-12	DETAILS
16	C-13	DETAILS

EROSION CONTROL

17	ESC-1	EROSION CONTROL PLAN

TRAFFIC CONTROL

18	TC-1	DETOUR PLAN

PROJECT CONTACTS

OWNER:
CITY OF NEWBERG
414 E. FIRST STREET
PO BOX 970
NEWBERG, OREGON 97132
TEL: 503-554-1631
CONTACT: JASON WUERTZ, PE

CIVIL ENGINEER:
MURRAY, SMITH & ASSOCIATES, INC
121 SW SALMON STREET, STE 2500
PORTLAND, OREGON 97204
TEL: 503-225-9010
CONTACT: NICK MCMURTREY, PE

GAS:
NW NATURAL
20285 SW CIPOLE ROAD
SHERWOOD, OR 97140
TEL: 503-226-4211 EXT 4376
CONTACT: ANDREA KUEHNEL, PE

POWER:
PORTLAND GENERAL ELECTRIC
4245 KALE ST NE
SALEM, OR 97305
TEL: 503-463-6184
CONTACT: RICK SCHIEDLER

CABLE:
COMCAST
150 LEWISBURG AVENUE
CORVALLIS, OR 97330
TEL: 541-230-0079
CONTACT: RYAN HANSEN

TELECOM:
FRONTIER
4155 SW CEDAR HILLS BLVD
BEAVERTON, OR 97005-2016
TEL: 503-644-7153
CONTACT: BOB PLANT

WATER, SEWER, STORM:
CITY OF NEWBERG
414 E. FIRST STREET
PO BOX 970
NEWBERG, OREGON 97132
TEL: 503-554-1631
CONTACT: JASON WUERTZ, PE

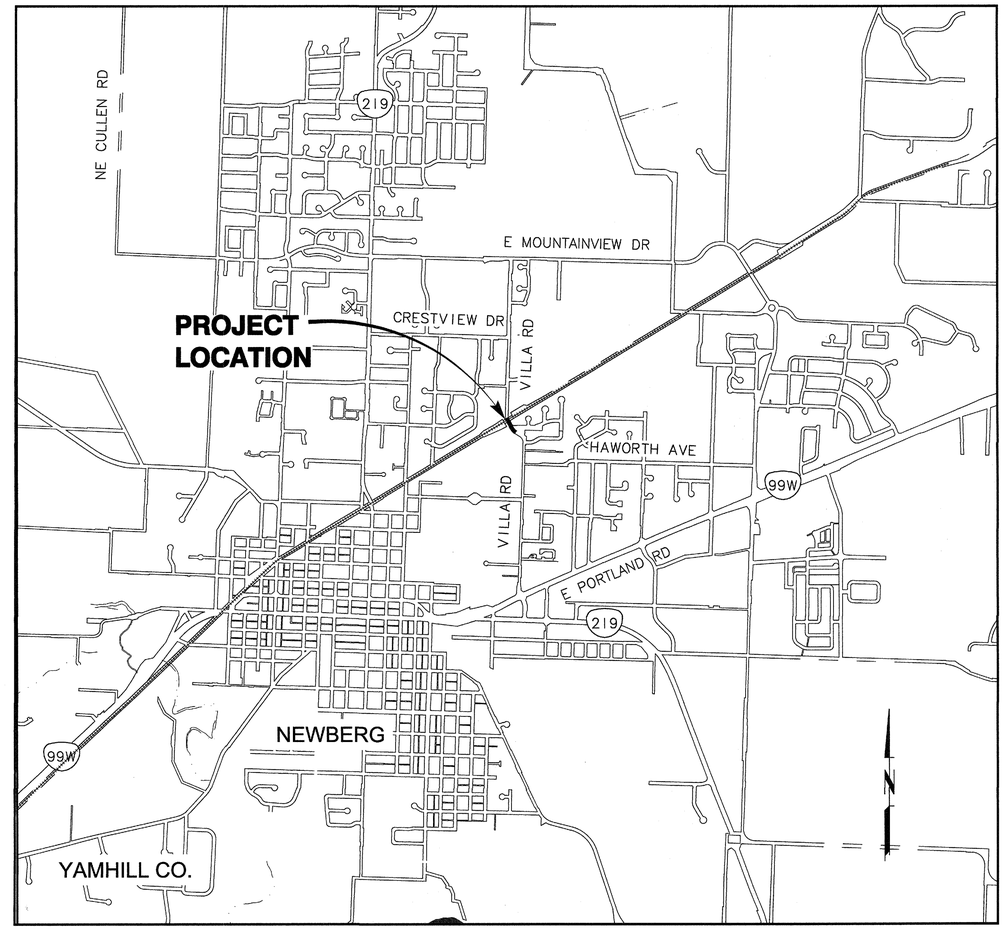

VICINITY MAP
SCALE: NTS

ATTENTION: OREGON LAW REQUIRES THE CONTRACTOR TO FOLLOW THE RULES ADOPTED BY THE OREGON UTILITY NOTIFICATION CENTER. THOSE RULES ARE SET FORTH IN OAR 952-001-0010 THROUGH OAR 952-001-0090. THE CONTRACTOR MAY OBTAIN COPIES OF THE RULES BY CALLING THE UTILITY NOTIFICATION CENTER. (NOTE: THE TELEPHONE NUMBER FOR THE OREGON UTILITY NOTIFICATION CENTER IS 1-800-332-2344 FOR INFORMATION AND 811 FOR LOCATES.

811 Know what's below. Call before you dig.

BID SET

MSA Murray, Smith & Associates, Inc. Engineers/Planners
121 S.W. Salmon, Suite 900 Portland, Oregon 97204
PHONE 503-225-9010 FAX 503-225-9022

VILLA ROAD IMPROVEMENTS, HAWORTH TO CRESTVIEW - PH. 1 - CULVERT REPLACEMENTS
PROJECT NO. 702163 - CITY OF NEWBERG, OREGON

TITLE SHEET, INDEX OF DRAWINGS AND VICINITY MAP

REGISTERED PROFESSIONAL ENGINEER OREGON NICHOLAS J. MCMURTREY RENEWS 12-31-16

NO.	REVISION	DATE

SCALE: AS SHOWN
DATE: March 17, 2016
REVIEWED: NJM
DESIGNED: SBB
APPROVED: GEC
PLOT DATE: March 17, 2016
FILE:

SHEET G-1

G:\PDX_PROJECTS\15\1699 - NEWBERG VILLA RD IMPROVEMENTS\CAD\SHEETS\15-1699-OR-PH1-G.DWG

GENERAL NOTES

1. SURVEY PROVIDED BY HDJ DESIGN GROUP, PLLC, DATED AUGUST 28, 2015. ELEVATIONS ARE BASED ON CITY OF NEWBERG VERTICAL DATUM ESTABLISHED PER BENCH MARK NUMBER 89 LOCATED BY A BRASS CAP IN THE TOP OF CURB ON THE WEST SIDE OF VILLA ROAD AT THE WESTERLY PROJECTION OF THE CENTERLINE OF EASTBOUND FULTON STREET, HAVING AN ELEVATION OF 201.98 (NAVD88).

2. CONSTRUCTION LAYOUT (ALL ACTUAL LINES AND GRADES) SHALL BE STAKED BY A PROFESSIONAL SURVEYOR, REGISTERED IN THE STATE OF OREGON, BASED ON COORDINATES, DIMENSIONS, BEARINGS, AND ELEVATIONS AS SHOWN ON THE PLANS.

3. PROJECT CONTROL SHALL BE FIELD VERIFIED AND CHECKED FOR RELATIVE HORIZONTAL POSITION AND VERTICAL POSITION BASED ON THE BENCHMARK STATED HEREON PRIOR TO BEGINNING CONSTRUCTION LAYOUT.

4. WHEN DIMENSIONS AND COORDINATE LOCATIONS ARE REPRESENTED – DIMENSIONS SHALL HOLD OVER COORDINATE LOCATION. NOTIFY THE CIVIL ENGINEER OF RECORD IMMEDIATELY UPON DISCOVERY OF ANY DISCREPANCIES BETWEEN DIMENSIONS AND COORDINATE LOCATIONS.

5. CONTRACTOR SHALL PRESERVE AND PROTECT FROM DAMAGE ALL EXISTING MONUMENTATION DURING CONSTRUCTION. NEW MONUMENTS SHALL BE REESTABLISHED BY A LICENSED SURVEYOR TO REPLACE EXISTING MONUMENTS DAMAGED DURING CONSTRUCTION. THE CONTRACTOR IS RESPONSIBLE FOR COORDINATING AND PAYING FOR THE REPLACEMENT OF ANY MONUMENTS DAMAGED OR REMOVED DURING CONSTRUCTION.

6. CONTRACTOR SHALL REFERENCE SOILS REPORT FOR THE VILLA ROAD IMPROVEMENTS PROJECT BY SHANNON AND WILSON, INC, FOR THE SITE SOILS CONDITIONS.

7. ALL CONSTRUCTION AND MATERIALS SHALL CONFORM TO THESE PLANS, THE PROJECT SPECIFICATIONS AND THE APPLICABLE REQUIREMENTS OF THE 2015 OREGON STANDARD SPECIFICATIONS FOR CONSTRUCTION, 2014 OREGON PLUMBING SPECIALTY CODE AND REQUIREMENTS OF THE CITY OF NEWBERG.

8. THE COMPLETED INSTALLATION SHALL CONFORM TO ALL APPLICABLE FEDERAL, STATE, AND LOCAL CODES, ORDINANCES AND REGULATIONS. ALL PERMITS, LICENSES AND INSPECTIONS REQUIRED BY THE GOVERNING AUTHORITIES FOR THE EXECUTION AND COMPLETION OF WORK SHALL BE SECURED BY THE CONTRACTOR PRIOR TO COMMENCING CONSTRUCTION.

9. ATTENTION: OREGON LAW REQUIRES YOU TO FOLLOW RULES ADOPTED BY THE OREGON UTILITY NOTIFICATION CENTER. THOSE RULES ARE SET FORTH IN OAR 952-001-0010 THROUGH OAR 952-001-0090. YOU MAY OBTAIN COPIES OF THE RULES BY CALLING THE CENTER. (NOTE: THE TELEPHONE NUMBER FOR THE OREGON UTILITY NOTIFICATION CENTER IS (503) 232-1987). EXCAVATORS MUST NOTIFY ALL PERTINENT COMPANIES OR AGENCIES WITH UNDERGROUND UTILITIES IN THE PROJECT AREA AT LEAST 48 BUSINESS-DAY HOURS, BUT NOT MORE THAN 10 BUSINESS DAYS PRIOR TO COMMENCING AN EXCAVATION, SO UTILITIES MAY BE ACCURATELY LOCATED.

10. THE CONTRACTOR SHALL POTHOLE AND VERIFY LOCATIONS, ELEVATIONS, TYPES AND SIZES OF ALL EXISTING UTILITIES PRIOR TO CONSTRUCTING NEW PIPING FAR ENOUGH IN ADVANCE TO ALLOW NECESSARY ADJUSTMENTS IN GRADE AND SHALL NOTIFY ENGINEER OF NEED TO ADJUST PIPING INSTALLATION ACCORDINGLY. POTHOLING SHALL SUFFICIENTLY PRECEDE LAYING OF PIPE TO ALLOW REQUIRED ELEVATION ADJUSTMENTS TO BE ACCOMPLISHED WITHOUT REWORK. ELEVATION ADJUSTMENTS SHALL BE EXPECTED AND ARE INCIDENTAL TO THE WORK. DEFLECT PIPE AS REQUIRED AND WITHIN MANUFACTURER'S TOLERANCES TO AVOID EXISTING UTILITIES AND COMPLETE TIE-INS.

11. THE LOCATION OF EXISTING UNDERGROUND UTILITIES SHOWN ON THE PLANS ARE FOR INFORMATION ONLY AND ARE NOT GUARANTEED TO BE COMPLETE OR ACCURATE. CONTRACTOR SHALL VERIFY ELEVATIONS, PIPE SIZE, AND MATERIAL TYPES OF ALL UNDERGROUND UTILITIES PRIOR TO COMMENCING WITH CONSTRUCTION AND SHALL BRING ANY DISCREPANCIES TO THE ATTENTION OF THE ENGINEER, 72 HOURS PRIOR TO START OF CONSTRUCTION TO PREVENT GRADE AND ALIGNMENT CONFLICTS.

12. CONNECTIONS TO EXISTING WATERLINES MAY REQUIRE TEMPORARY SHUTDOWNS OF EXISTING FACILITIES. THE CONTRACTOR SHALL COORDINATE THIS WORK WITH THE CITY OF NEWBERG AND PROVIDE A MINIMUM OF 72 HOURS ADVANCE NOTICE PRIOR TO PERFORMING WATERLINE TIE-IN WORK. CONTRACTOR TO VERIFY WITH THE CITY OF NEWBERG IF EXISTING LINES ARE TO BE DEPRESSURIZED PRIOR TO PERFORMING THIS WORK. SEE SPECIFICATIONS FOR SEQUENCE OF CONSTRUCTION REQUIREMENTS. OPERATION OF EXISTING VALVES SHALL BE BY CITY PERSONNEL ONLY.

13. THE ENGINEER OR OWNER IS NOT RESPONSIBLE FOR THE SAFETY OF THE CONTRACTOR OR HIS CREW. ALL OSHA REGULATIONS SHALL BE STRICTLY ADHERED TO IN THE PERFORMANCE OF THE WORK. CONTRACTOR TO NOTIFY CITY 72 HOURS PRIOR TO CUTTING ANY WATERLINES.

14. TEMPORARY AND PERMANENT EROSION CONTROL MEASURES SHALL BE IMPLEMENTED. THE CONTRACTOR SHALL ADHERE TO THE REQUIREMENTS OF THE CITY OF NEWBERG FOR MINIMUM EROSION CONTROL MEASURES. THE ESC FACILITIES SHOWN IN THESE PLANS ARE THE MINIMUM REQUIREMENTS FOR ANTICIPATED SITE CONDITIONS. DURING THE CONSTRUCTION PERIOD, ESC FACILITIES SHALL BE UPGRADED AS NEEDED FOR UNEXPECTED STORM EVENTS AND TO ENSURE THAT SEDIMENT AND SEDIMENT LADEN WATER DO NOT LEAVE THE SITE.

15. THE CONTRACTOR IS RESPONSIBLE FOR MAINTAINING ALL ROADWAYS, KEEPING THEM CLEAN AND FREE OF CONSTRUCTION MATERIALS AND DEBRIS, AND PROVIDING DUST CONTROL AS REQUIRED.

16. TRAFFIC CONTROL SHALL BE PROVIDED BY THE CONTRACTOR THROUGHOUT CONSTRUCTION. CONTRACTOR SHALL PROVIDE A TRAFFIC CONTROL PLAN TO THE CITY OF NEWBERG FOR REVIEW AND APPROVAL PRIOR TO COMMENCING CONSTRUCTION.

17. CONTRACTOR SHALL MAINTAIN ALL DRIVEWAYS, UTILITIES AND SERVICES AT ALL TIMES DURING CONSTRUCTION, UNLESS OTHERWISE APPROVED BY THE CITY OF NEWBERG.

18. THE CONTRACTOR SHALL BE RESPONSIBLE FOR COORDINATING AND SCHEDULING ALL WORK WITH THE CITY OF NEWBERG.

19. NOTIFY THE CITY OF NEWBERG'S INSPECTOR 72 HOURS BEFORE STARTING WORK. A PRECONSTRUCTION MEETING WITH THE CITY OF NEWBERG AND THE CONTRACTOR'S REPRESENTATIVE SHALL BE REQUIRED.

SEPARATION STATEMENT

ALL WATER MAIN CROSSINGS SHALL CONFORM TO THE OREGON STATE HEALTH DEPARTMENT, CHAPTER 333. WATER MAINS SHALL CROSS OVER SANITARY SEWERS WITH A 18" MINIMUM CLEARANCE BETWEEN OUTSIDE DIAMETERS OF PIPE WITH ALL PIPE JOINTS EQUIDISTANT FROM CROSSING. HORIZONTAL SEPARATION BETWEEN WATER MAINS AND SANITARY SEWERS IN PARALLEL INSTALLATIONS SHALL BE 10' MINIMUM. MAINTAIN 12" MINIMUM VERTICAL DISTANCE FOR ALL OTHER UTILITY CROSSINGS AND 12" HORIZONTAL PARALLEL DISTANCE. IN CASES WHERE IT IS NOT POSSIBLE TO MAINTAIN THE MINIMUM 10' HORIZONTAL SEPARATION, THE WATER MAIN SHALL BE LAID ON A SEPARATE SHELF IN THE TRENCH 18" INCHES ABOVE THE SEWER.

MATERIAL NOTES

1. MATERIALS SHALL BE NEW. THE USE OF MANUFACTURER'S NAMES, MODELS, AND NUMBERS IS REQUIRED AND INTENDED TO ESTABLISH STYLE, QUALITY, APPEARANCE, AND USEFULNESS. PROPOSED SUBSTITUTIONS WILL REQUIRE WRITTEN APPROVAL FROM THE CITY OF NEWBERG PRIOR TO INSTALLATION.

2. STORM SEWER PIPING SHALL BE DUCTILE IRON, 3034 PVC OR C900 PIPE CONFORMING TO THE PROJECT SPECIFICATIONS. WHERE PIPE MATERIALS ARE SPECIFICALLY INDICATED IN THE PLANS, ALTERNATIVE MATERIALS WILL NOT BE ALLOWED.

3. SANITARY SEWER PIPING SHALL BE PVC PIPE OR DUCTILE IRON PIPE CONFORMING TO THE PROJECT SPECIFICATIONS.

4. PUBLIC WATER MAINS SHALL BE DUCTILE IRON PIPE, CLASS 52 CONFORMING TO THE PROJECT SPECIFICATIONS.

5. PRIVATE WATER LINES 2-INCH DIAMETER AND SMALLER SHALL BE TYPE K COPPER TUBING. CONFORMING TO THE PROJECT SPECIFICATIONS. WHEN A CORROSIVE POTENTIAL CONDITION IS ENCOUNTERED AND THE COPPER SERVICE PASSES OVER OR UNDER AN ACTIVE CATHODIC PROTECTION SYSTEM, THE SERVICE SHALL BE INSTALLED IN A SCHEDULE 40 PVC CONDUIT FOR A DISTANCE OF 10 FEET ON EACH SIDE OF THE ACTIVE SYSTEM. ALL CONDUIT PLACEMENTS MUST BE PROVIDED WITH AS-BUILT RECORDS.

6. CONCRETE FOR CURBS, SIDEWALK AND DRIVEWAYS SHALL HAVE A MINIMUM COMPRESSIVE STRENGTH OF 3,300 PSI AT 28 DAYS.

CONSTRUCTION NOTES

GENERAL

1. SUBGRADE AND TRENCH BACKFILL SHALL BE COMPACTED TO AT LEAST 95% OF THE MAXIMUM DRY DENSITY AS DETERMINED BY ASTM D-698. FLOODING OR JETTING THE BACKFILLED TRENCHES WITH WATER IS NOT PERMITTED.

DEMOLITION

1. THE CONTRACTOR SHALL BE RESPONSIBLE FOR DEMOLITION AND DISPOSAL OF EXISTING AC, CURBS, SIDEWALKS AND OTHER SITE ELEMENTS WITHIN THE SITE AREA TO ALLOW FOR EXECUTION OF THE WORK.

2. EXCEPT FOR MATERIALS INDICATED TO BE STOCKPILED OR TO REMAIN THE PROPERTY OF THE CITY OF NEWBERG, CLEARED MATERIALS SHALL BECOME CONTRACTOR'S PROPERTY, REMOVED FROM THE SITE, AND DISPOSED OF PROPERLY.

3. ITEMS INDICATED TO BE SALVAGED SHALL BE CAREFULLY REMOVED AND DELIVERED OR STORED AT THE PROJECT SITE AS DIRECTED BY THE CITY OF NEWBERG.

4. ALL LANDSCAPING, PAVEMENT, CURBS AND SIDEWALKS, BEYOND THE IDENTIFIED SITE AREA, DAMAGED DURING THE CONSTRUCTION SHALL BE REPLACED TO THEIR ORIGINAL CONDITION OR BETTER AT NOT ADDITIONAL COST.

5. CONCRETE SIDEWALKS SHOWN FOR DEMOLITION SHALL BE REMOVED TO THE NEAREST EXISTING CONSTRUCTION JOINT.

6. SAWCUT STRAIGHT MATCHLINES TO CREATE A BUTT JOINT BETWEEN THE EXISTING AND NEW PAVEMENT.

UTILITIES

1. ADJUST ALL INCIDENTAL STRUCTURES, MANHOLES, VALVE BOXES, CATCH BASINS, FRAMES AND COVERS, ET CETERA TO FINISHED GRADE.

2. CONTRACTOR SHALL ADJUST ALL EXISTING AND/OR NEW FLEXIBLE UTILITIES (WATER, GAS, TV, TELEPHONE, ELECTRIC, ET CETERA) TO CLEAR ANY EXISTING OR NEW GRAVITY DRAIN UTILITIES (STORM DRAIN, SANITARY SEWER, ET CETERA) IF CONFLICT OCCURS.

3. CONTRACTOR SHALL COORDINATE WITH PRIVATE UTILITY COMPANIES FOR THE INSTALLATION OR RELOCATION OF GAS, ELECTRICAL, POWER AND TELEPHONE SERVICE AS NECESSARY TO CONSTRUCT THE PROJECT.

4. THE CITY OF NEWBERG SHALL INSPECT AND APPROVE ANY SUBGRADE UTILITY IMPROVEMENTS BEFORE BACKFILLING IS ALLOWED. CONTRACTOR SHALL VERIFY AND RECORD MEASUREMENTS OF EXACT LOCATION AND DEPTH BEFORE BACKFILLING IMPROVEMENTS AND SUBMIT DOCUMENTATION TO THE CITY OF NEWBERG.

STORM AND SANITARY

1. CONNECTIONS TO EXISTING STORM AND SANITARY SEWERS SHALL CONFORM TO THE 2015 OREGON STANDARD SPECIFICATIONS FOR CONSTRUCTION, SECTION 00490, "WORK ON EXISTING SEWERS AND STRUCTURES".

2. BEGIN LAYING STORM DRAIN AND SANITARY SEWER PIPE AT THE LOW POINT OF THE SYSTEM, TRUE TO GRADE AND ALIGNMENT INDICATED WITH UNBROKEN CONTINUITY OF INVERT. THE CONTRACTOR SHALL ESTABLISH LINE AND GRADE FOR THE STORM AND SANITARY SEWER PIPE USING A LASER.

3. ALL AREA DRAIN LEADERS SHALL HAVE A MINIMUM SLOPE OF 1 PERCENT UNLESS NOTED OTHERWISE IN THE PLANS.

WATER

1. ALL WATER AND FIRE PROTECTION PIPE SHALL HAVE A MINIMUM 36-INCH COVER TO THE FINISH GRADE. PRESSURE TESTING OF PIPE SHALL BE COMPLETED WITH A MINIMUM 36-INCH COVER.

2. ALL WATER AND FIRE PRESSURE FITTINGS SHALL BE PROPERLY RESTRAINED WITH MJ FITTINGS (EBBA IRON MEGA LUG ONLY).

3. ALL WATER MAIN 10-INCH DIAMETER AND SMALLER SHALL BE RESTRAINED DUCTILE IRON, CLASS 52, CONFORMING TO THE LATEST REVISION OF ANSI/AWWA C151/A21.51.

4. ALL DUCTILE IRON WATER MAIN ENCASED IN CLSM SHALL FIRST BE WRAPPED IN POLYETHYLENE.

5. ALL WATER MAIN / SANITARY SEWER CROSSINGS SHALL CONFORM TO THE OREGON STATE HEALTH DEPARTMENT REGULATIONS, CHAPTER 333.

BID SET

Murray, Smith & Associates, Inc.
Engineers/Planners
121 S.W. Salmon, Suite 900
Portland, Oregon 97204
PHONE 503-225-9010
FAX 503-225-9022

City of Newberg

VILLA ROAD IMPROVEMENTS, HAWORTH TO CRESTVIEW - PH. 1 - CULVERT REPLACEMENTS
PROJECT NO. 702163 - CITY OF NEWBERG, OREGON

GENERAL NOTES

REGISTERED PROFESSIONAL ENGINEER — OREGON — NICHOLAS J. MOUNTANEY — RENEWS 12-31-16

NO.	REVISION	DATE

SCALE: AS SHOWN
DATE: March 17, 2016
REVIEWED: NJM
DESIGNED: SBB
APPROVED: GEC
PLOT DATE: March 17, 2016
FILE:

SHEET
G-2
02 of 18

G:\PDX_PROJECTS\15\1699 - NEWBERG VILLA RD IMPROVEMENTS\CAD\SHEETS\15-1699-OR-PH1-G.DWG

LEGEND

	EXISTING	PROPOSED
WETLANDS DELINEATION		
BARBED WIRE FENCE		
CHAIN LINK FENCE		
WOOD FENCE		
COMMUNICATIONS LINE	COM	
GAS LINE	(G)	
POWER/SIGNAL LINE	P	P
STORM DRAINAGE LINE	SD	8"SD
SANITARY SEWER LINE	SS	8"SS
WATER LINE	(W)	18"W
ABANDON OR REMOVE PIPE		ABSH
CENTERLINE		
RIGHT-OF-WAY / PROPERTY LINE		
EASEMENT		
EDGE OF PAVEMENT/AC		
EDGE OF GRAVEL		
CURB		
SAWCUT LINE		
JERSEY BARRIER		
WATER QUALITY FEATURE		
SIDEWALK/CONCRETE SURFACE		
STRUCTURE OR FACILITY		
CONTOUR MINOR		
CONTOUR MAJOR	200	200
STORM AREA DRAINAGE BASIN		
STORM DRAINAGE CATCH BASIN		
STORM DRAINAGE CURB INLET		
STORM DRAINAGE VAULT	D	
STORM DRAINAGE MANHOLE	D	
DITCH INLET @ FLOW LINE		
STORM DRAINAGE CLEANOUT		
ROOF DRAIN	RD	
SANITARY SEWER MANHOLE	S	
SANITARY SEWER CLEANOUT		
WATER METER		
WATER MANHOLE	W	
WATER VALVE		
WATER VAULT	W	
WATER WELL HOUSE	W	
WATER BLOW OFF VALVE	BO	
WATER SPIGOT		
FIRE DEPT CONNECTION	FDC	
FIRE HYDRANT		
SPRINKLER VALVE	SV	
SPRINKLER HEAD		
PIPE SPOOL/LONG SLEEVE		
COLLAR THRUST BLOCK		
TEE		
BLOW-OFF ASSY		
BENDS (90°, 45°, 22½°)		
RESTRAINED JOINT PIPE		R
CLSM PIPE TRENCH BACKFILL		CLSM

	EXISTING	PROPOSED
GRANULAR PIPE TRENCH BACKFILL		G
GAS VALVE	GV	
GAS METER		
GAS RISER/GAS FINK	GF	
POWER/ELECTRICAL VAULT	P	
POWER/ELECTRICAL TRANSFORMER		
POWER/ELECTRIC MANHOLE	P	
POWER JUNCTION BOX		
POWER METER		
POWER RISER		
POWER POLE		
POWER POLE W/ LIGHT		
GUY WIRE/ANCHOR		
STREET LIGHT/LIGHT POLE		
GROUND LIGHT		
TRAFFIC/SIGNAL JUNCTION BOX	TCB	
TRAFFIC SIGNAL POLE		
TRAFFIC SIGNAL CROSSING POLE		
COMMUNICATIONS RISER AS NOTED		
COMMUNICATIONS MANHOLE AS NOTED	C	
COMMUNICATIONS VAULT	C	
UTILITY CABINET AS NOTED	U	
UNKNOWN UTILITY MANHOLE	U	
UNKNOWN UTILITY VAULT	U	
UNKNOWN UTILITY RISER/STANDPIPE		
UNKNOWN UTILITY CLEANOUT		
MONITOR WELL		
BOLLARD		
MAILBOX		
SIGN		
TEST PIT		
BUILDING COLUMN		
GATE POST		
WETLAND FLAGGING		
BUSH/SHRUB		
CONIFEROUS TREE		
DECIDUOUS TREE		
FISH LOG		
100-YEAR FLOODPLAIN		
STREAM CENTERLINE		
TWMF DIVERSION BARRIER/DAM		
TWMF TEMP BYPASS PIPE		
STRUCTURAL PLATE ARCH CULVERT		
STREAMBED MATERIAL		
WILLOW BUNDLES IN RIPRAP		

ABBREVIATIONS

AB	ANCHOR BOLT
AC	ASPHALTIC CONCRETE
ANC	ANCHOR
APPROX	APPROXIMATE
APPVD	APPROVED
ASSY	ASSEMBLY
BFV	BUTTERFLY VALVE
BLDG	BUILDING
BO	BLOW-OFF
BV	BALL VALVE
CHKV	CHECK VALVE
CL	CENTER LINE
CLSM	CONTROLLED LOW STRENGTH MATL
CO	CLEANOUT
CONC	CONCRETE
CONST	CONSTRUCT(ION)
CORP	CORPORATION
CPLG	COUPLING
CR	CRUSHED ROCK
CSP	CONCRETE SEWER PIPE
DET	DETAIL
DI	DUCTILE IRON
DIA	DIAMETER
DIM	DIMENSION
DWG	DRAWING
DWY	DRIVEWAY
EA	EACH
EL	ELEVATION
E/ELEC	ELECTRIC(AL)
EOP	EDGE OF PAVEMENT
ESMT	EASEMENT
EW	EACH WAY
EXIST	EXISTING
FAB	FABRICATE
FD	FLOOR DRAIN
FIN	FINISH
FITG	FITTING
FL	FLOWLINE
FLEX	FLEXIBLE
FLG	FLANGE
FLR	FLOOR
GA	GAGE
GALV	GALVANIZED
GR	GRADE
GRVL	GRAVEL
GV	GATE VALVE
HORIZ	HORIZONTAL
ID	INSIDE DIAMETER
IE	INVERT ELEVATION
J-BOX	JUNCTION BOX
JT	JOINT
LTF	LENGTH TO FIT
LVAP	LOWER VERTICAL ADJUSTMENT PROFILE
MATL	MATERIAL
MAX	MAXIMUM
MFR	MANUFACTURER
MH	MANHOLE
MIN	MINIMUM
MJ	MECHANICAL JOINT
NIC	NOT IN CONTRACT
NC	NORMALLY CLOSED
NO	NORMALLY OPEN
NO.	NUMBER
NTS	NOT TO SCALE
OC	ON CENTER
OD	OUTSIDE DIAMETER
OPNG	OPENING
OSD	OREGON STANDARD DRAWING
PCMS	PORTABLE CHANGEABLE MESSAGE SIGN
PERF	PERFORATED
PERP	PERPENDICULAR
PGE	PORTLAND GENERAL ELECTRIC
PROP	PROPOSED
PSF	POUNDS PER SQUARE FOOT
PSI	POUNDS PER SQUARE INCH
RDCR	REDUCER
REINF	REINFORCE(D)(ING)(MENT)
REQ'D	REQUIRED
RESTR	RESTRAINED
R/W	RIGHT-OF-WAY
SCHED	SCHEDULE
SD	STORM DRAIN
SHT	SHEET
SLP	SLOPE
SPL	SPOOL
SS	SANITARY SEWER
SST	STAINLESS STEEL
STA	STATION
STD	STANDARD
STL	STEEL
SQ	SQUARE
S/W	SIDEWALK
T	TELEPHONE
THK	THICKNESS
THRD	THREADED
TELM	TELEMETRY
TEMP	TEMPORARY
TWMF	TEMPORARY WATER MANAGEMENT FACILITY
TYP	TYPICAL
VERT	VERTICAL
W	WATER
W/	WITH
XFMR	TRANSFORMER

SECTION AND DETAIL DESIGNATIONS

SECTION DESIGNATIONS

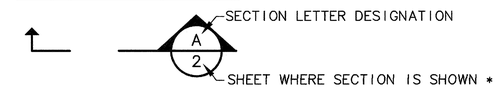

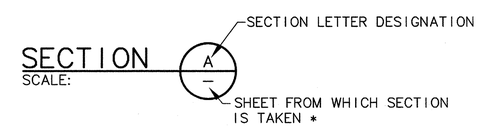

DETAIL DESIGNATION

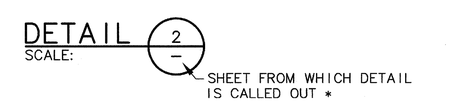

* NOTE: IF PLAN AND SECTION FOR DETAIL CALL-OUT AND DETAIL ARE SHOWN ON THE SAME DRAWING, DRAWING NUMBER IS REPLACED WITH A DASH. IF MULTIPLE REFERENCES ARE MADE TO THE SAME DETAIL, THE SHEET WHERE THE FIRST REFERENCE IS MADE IS LISTED.

BID SET

Murray, Smith & Associates, Inc.
Engineers/Planners
121 S.W. Salmon, Suite 900
Portland, Oregon 97204
PHONE 503-225-9010
FAX 503-225-9022

City of Newberg

VILLA ROAD IMPROVEMENTS, HAWORTH TO CRESTVIEW - PH. 1 - CULVERT REPLACEMENTS

PROJECT NO. 702163 - CITY OF NEWBERG, OREGON

SYMBOLS, LEGEND AND ABBREVIATIONS

REGISTERED PROFESSIONAL ENGINEER 72710PE OREGON NICHOLAS J. McNURNEY JUNE 8, 2012
RENEWS 12-31-16

NO.	REVISION	DATE

SCALE: AS SHOWN
DATE: March 17, 2016
REVIEWED: NJM
DESIGNED: SBB
APPROVED: GEC
PLOT DATE: March 18, 2016
FILE:

SHEET
G-3
03 of 18

G:\PDX_PROJECTS\15\1699 - NEWBERG VILLA RD IMPROVEMENTS\CAD\SHEETS\15-1699-OR-PH1-G.DWG

CONTROL POINTS				
POINT NO.	DESCRIPTION	NORTHING	EASTING	ELEVATION
1	MAG NAIL	608541.05	7568489.13	163.51
2	MAG NAIL	608332.44	7568685.89	164.05

NOTES:

1. PHASE 1 WORK CONSISTS OF REPLACING EXISTING CULVERTS WITH CULVERTS A AND B. OTHER IMPROVEMENTS ASSOCIATED WITH CULVERT REPLACEMENT NOT SHOWN FOR CLARITY.

2. FUTURE PHASE 2 IMPROVEMENTS ARE SHOWN FOR GENERAL INFORMATION ONLY AND ARE NOT INCLUDED IN THE CONTRACT.

2. PROJECT CONTROL SHALL REFERENCE THE FUTURE VILLA ROAD CENTERLINE STATIONING SHOWN. THE ENGINEER SHALL PROVIDE ALIGNMENT DATA TO CONTRACTOR.

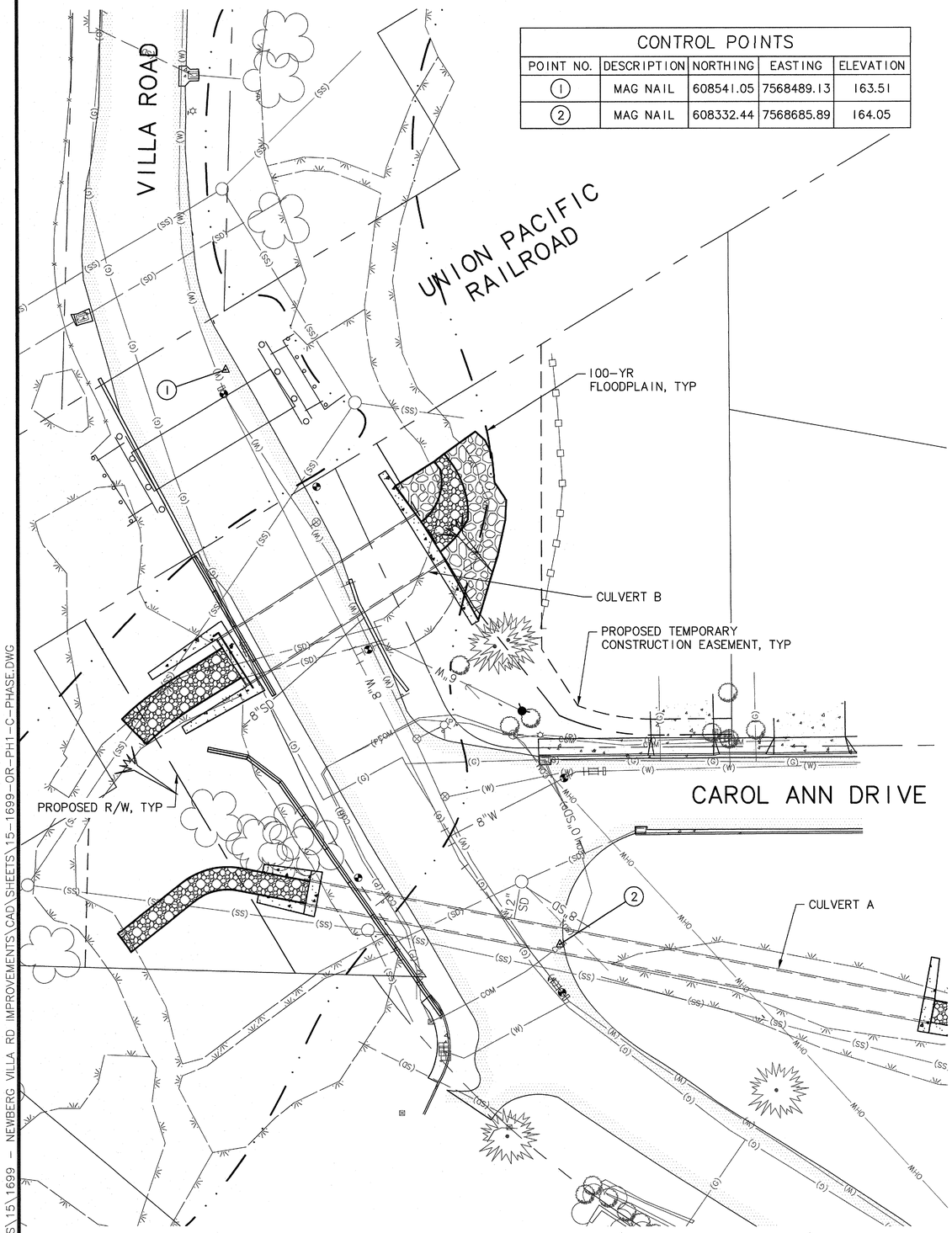

PHASE 1 – CULVERT REPLACEMENT (THIS PROJECT)

SCALE: 1"=20'

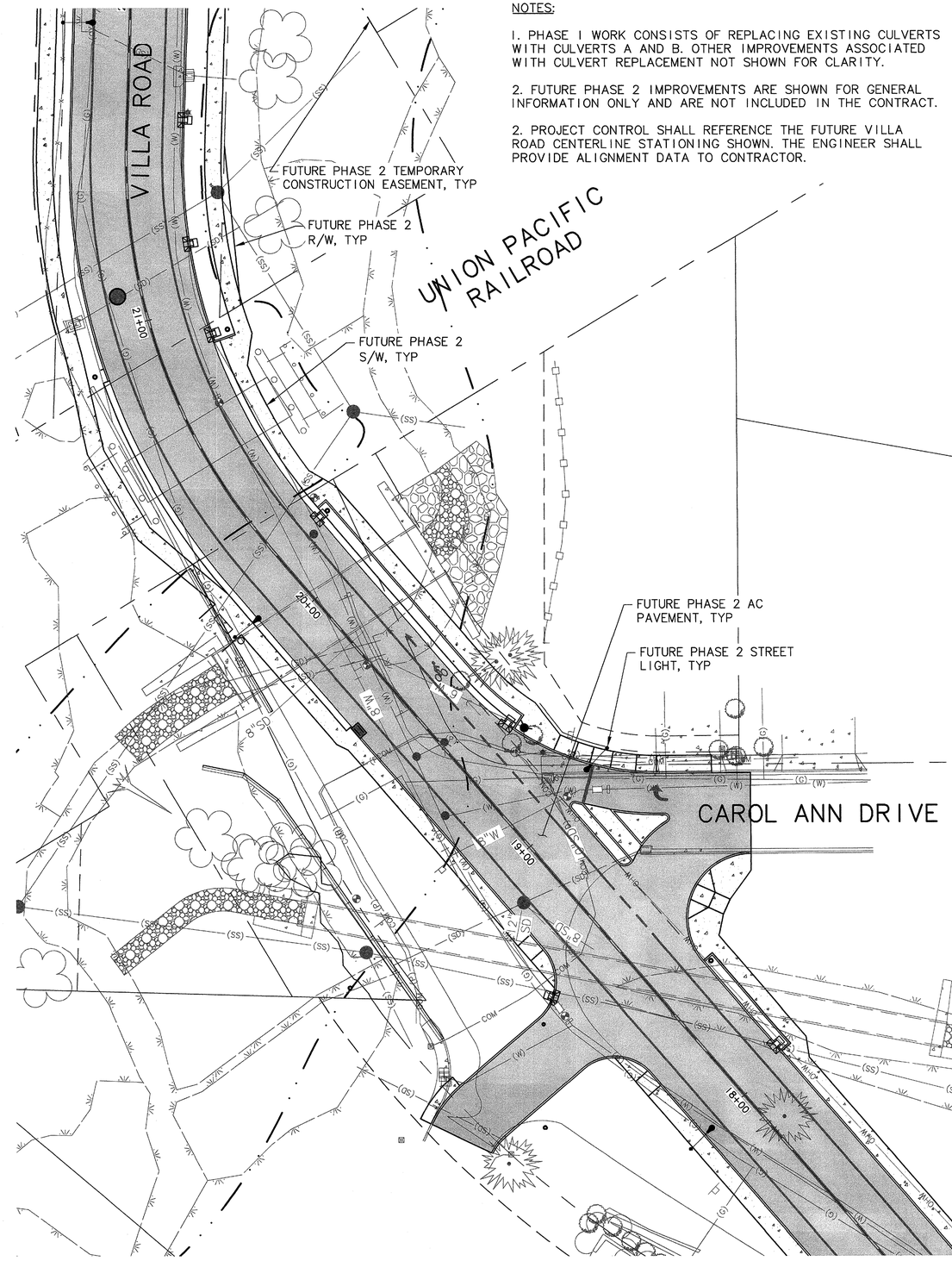

PHASE 2 – FUTURE CONDITIONS PLAN

SCALE: 1"=20'

20 10 0 20 40

SCALE IN FEET

BID SET

Murray, Smith & Associates, Inc.
Engineers/Planners
121 S.W. Salmon, Suite 900
Portland, Oregon 97204
PHONE 503-225-9010
FAX 503-225-9022

City of Newberg

VILLA ROAD IMPROVEMENTS, HAWORTH TO CRESTVIEW - PH. 1 - CULVERT REPLACEMENTS

PROJECT NO. 702163 - CITY OF NEWBERG, OREGON

PHASING PLAN

REGISTERED PROFESSIONAL ENGINEER — OREGON — NICHOLAS J. MAVANTHEY — 3/16/16 — RENEWS 12-31-16

NO.	REVISION	DATE

SCALE: AS SHOWN
DATE: March 17, 2016
REVIEWED: NJM
DESIGNED: SBB
APPROVED: GEC
PLOT DATE: March 18, 2016
FILE:

SHEET

C-1

G:\PDX_PROJECTS\15\1699 – NEWBERG VILLA RD IMPROVEMENTS\CAD\SHEETS\15-1699-OR-PH1-C-PHASE.DWG

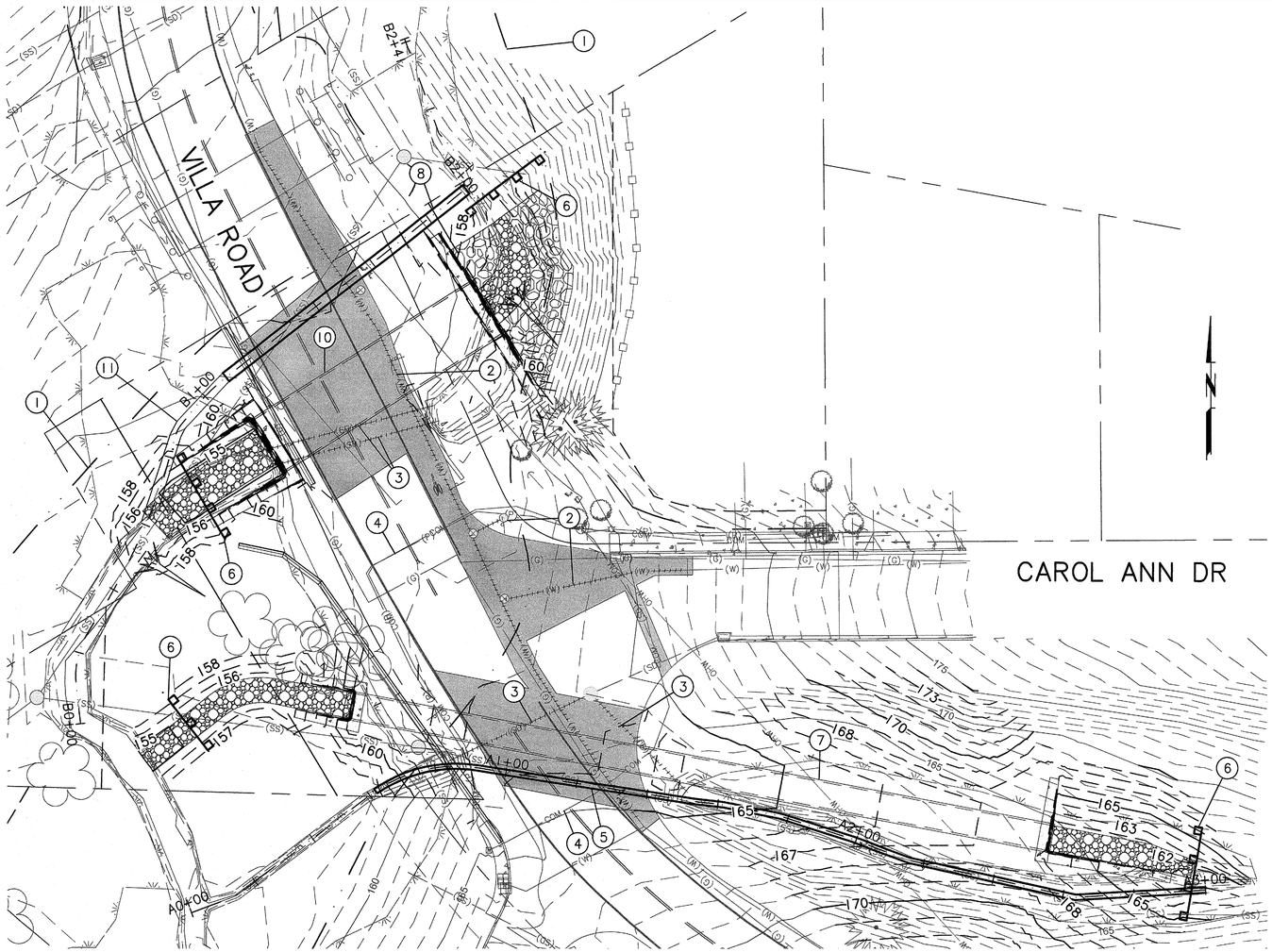

PLAN
SCALE: 1"=20'

CONSTRUCTION NOTES

1. FEMA 100-YR HIGH WATER LINE
2. REMOVE EXIST WATER MAIN PER SHT C-9
3. REMOVE EXIST STORM DRAIN OR CULVERT PER SHT C-9
4. RELOCATE UTILITY (BY OTHERS)
5. CONST TWMF 18" FLEXIBLE BYPASS PIPE
6. CONST TWMF DIVERSION BARRIER/DAM
7. CONST CULVERT A PER SHT C-3
8. CONST TWMF 36" BYPASS PIPE
9. NOT USED
10. CONST CULVERT B PER SHT C-6
11. CONST TWMF OUTLET CHANNEL PER DET 1, THIS SHT

NOTES:

1. CONCEPTUAL BYPASS BARRIER/DAM AND PIPING CONFIGURATION SHOWN. CONTRACTOR SHALL PREPARE AND SUBMIT A TEMPORARY WATER MANAGEMENT PLAN FOR REVIEW & APPROVAL BY CITY OF NEWBERG.

2. CONSTRUCTION FOR CULVERTS A AND B SHALL OCCUR WITHIN THE PERMITTED IN-WATER WORK WINDOW.

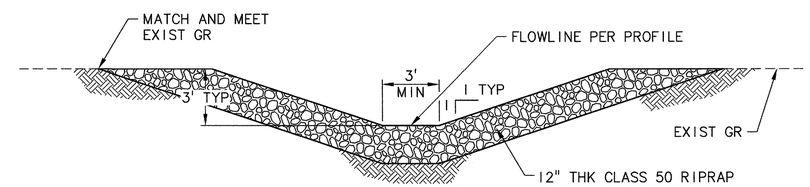

TWMF OUTLET CHANNEL DETAIL (1)
SCALE: NTS

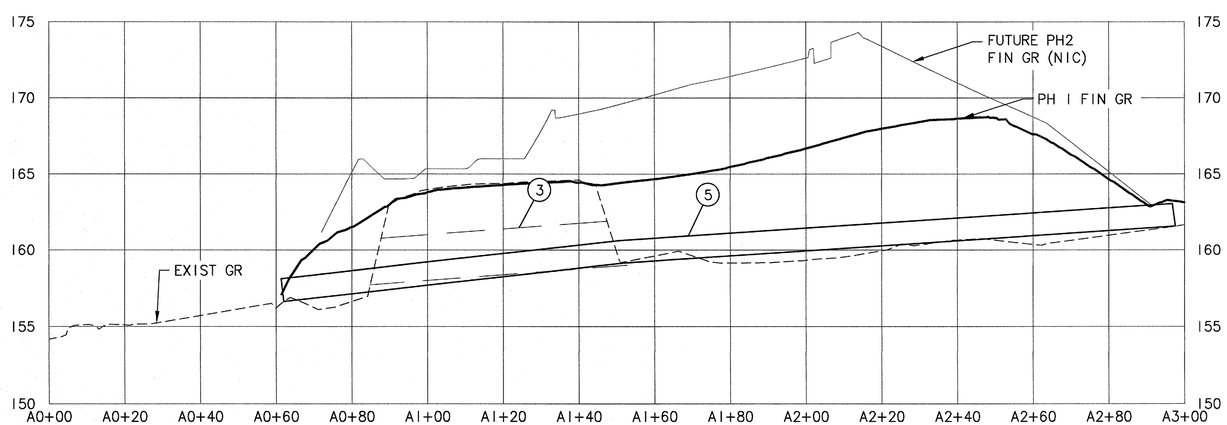

PROFILE – TEMP BYPASS PIPE A
SCALE: 1"=20' HORIZ, 1"=10' VERT

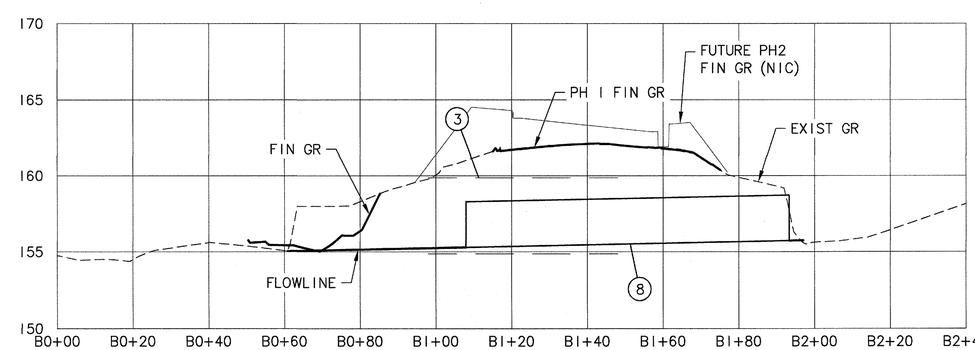

PROFILE – TEMP BYPASS PIPE B
SCALE: 1"=20' HORIZ, 1"=10' VERT

BID SET

MSA Murray, Smith & Associates, Inc. Engineers/Planners
121 S.W. Salmon, Suite 900 Portland, Oregon 97204
PHONE 503-225-9010 FAX 503-225-9022

City of Newberg

VILLA ROAD IMPROVEMENTS, HAWORTH TO CRESTVIEW - PH. 1 - CULVERT REPLACEMENTS
PROJECT NO. 702163 - CITY OF NEWBERG, OREGON

TEMPORARY WATER MANAGEMENT PLAN

REGISTERED PROFESSIONAL ENGINEER 727105 OREGON JUNE 8, 2012 NICHOLAS J. McMONAGLE
5/6/16
RENEWS 12-31-16

NO.	REVISION	DATE

SCALE: AS SHOWN
DATE: March 18, 2016
REVIEWED: NJM
DESIGNED: ARC
APPROVED: GEC
PLOT DATE: March 18, 2016
FILE:

SHEET
C-2
05 of 18

G:\PDX_PROJECTS\15\1699 - NEWBERG VILLA RD IMPROVEMENTS\CAD\SHEETS\15-1699-OR-PH1-C-CULVA.DWG

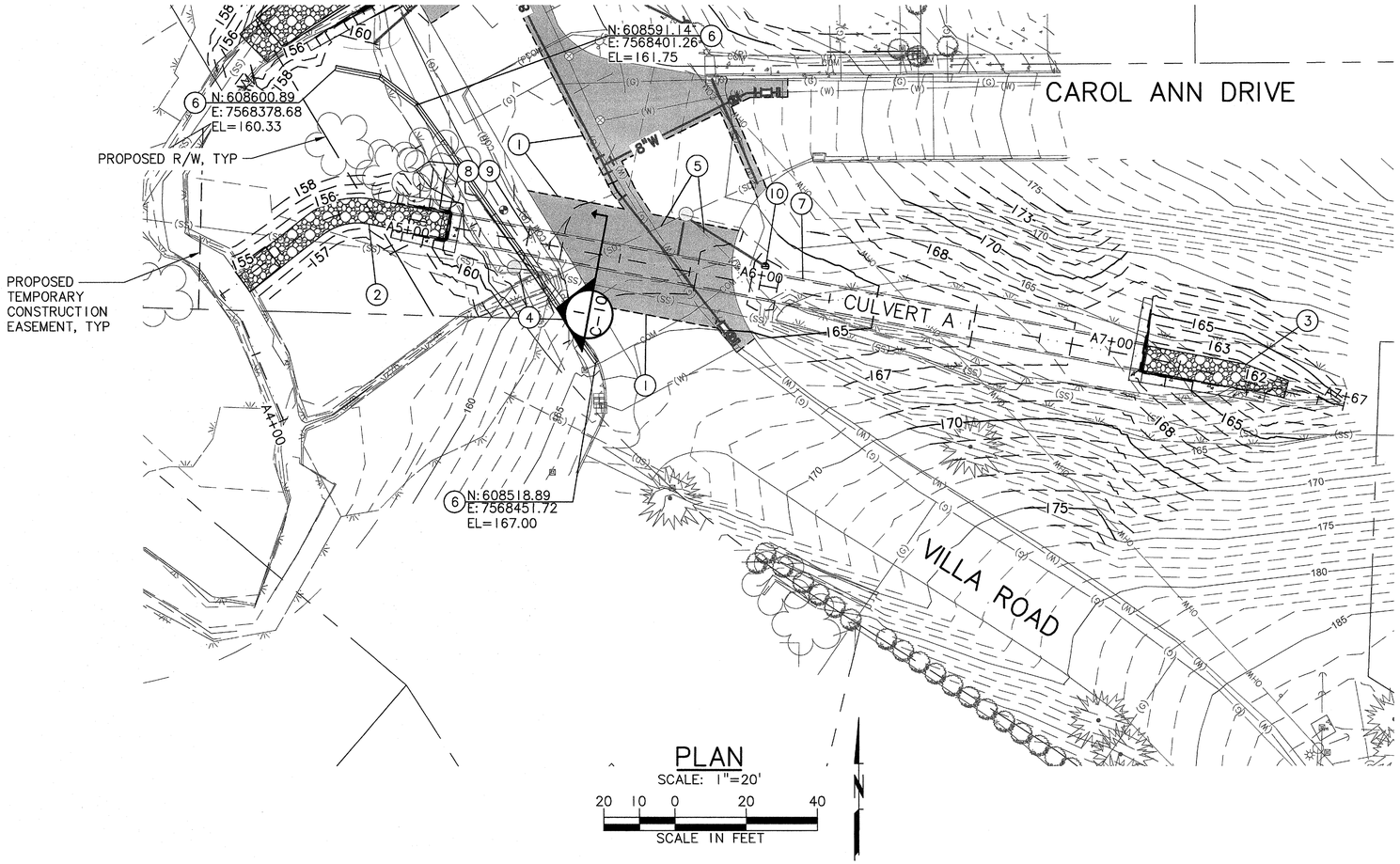

PLAN

SCALE: 1"=20'

20 10 0 20 40

SCALE IN FEET

NOTES:

1. REMOVE ALL STREAMBED SEDIMENT AND REGRADE CHANNEL TO THE UPSTREAM AND DOWNSTREAM LIMITS SHOWN.

2. PROFILE INFORMATION FOR EXISTING UTILITIES IS SHOWN AT ASSUMED 3 FEET OF COVER. CONTRACTOR SHALL FIELD VERIFY ACTUAL LOCATIONS.

3. LOWER VERTICAL ADJUSTMENT PROFILE (LVAP) PROVIDED FOR PERMITTING PURPOSES ONLY.

CONSTRUCTION NOTES

1. MATCH AND MEET EXIST ROADWAY SURFACE. PROVIDE ACP SURFACE RESTORATION TO EXIST GR PER DETAIL 5, SHT C-11.
2. CONSTRUCT DOWNSTREAM CHANNEL GRADING PER SHEET C-4
3. CONSTRUCT UPSTREAM CHANNEL GRADING PER SHEET C-5
4. ADJUST MH PER SHEET C-9
5. REMOVE AND RECONNECT SD PER SHT C-9
6. FURNISH AND INSTALL 75 FEET OF CONCRETE BARRIER AND REINSTALL 40 FEET OF EXISTING BARRIER. SEE SHT C-6 AND DET 4, SHT C-12
7. INSTALL CULVERT A PER DET 1, SHT C-10
8. REMOVE AND SALVAGE EXIST SIGN AND 2" PERF STL SQ POST.
9. INSTALL 2-1/4" PERF STL SQ TUBE SIGN SUPPORT PER OSD TM681 AT A LOCATION APPROVED BY ENGINEER. REINSTALL EXIST SIGN AND 2" PERF STL SQ POST.
10. INSTALL AREA DRAIN PER SHEET C-9

HYDRAULIC DATA

ITEM	ORDINARY HIGH WATER	DESIGN FLOOD	MAX. PROBABLE FLOOD
DISCHARGE (CFS)	6.63	57.52	65.9
RECURRENCE INTERVAL (YEARS)	< 2	100	500
WATER SURFACE ELEVATION AT UPSTREAM CULVERT FACE (FT)	159.84	160.80	160.92
WATER SURFACE ELEVATION AT DOWNSTREAM CULVERT FACE (FT)	157.66	158.56	158.72
VELOCITY (FPS)	1.0	4.5	4.8

LEGEND

- STREAMBED MATERIAL
- CONC FOOTING, HEADWALL, OR MODULAR RETAINING WALL
- STRUCTURE EXCAVATION AND BACKFILL BELOW ELEVATIONS SHOWN

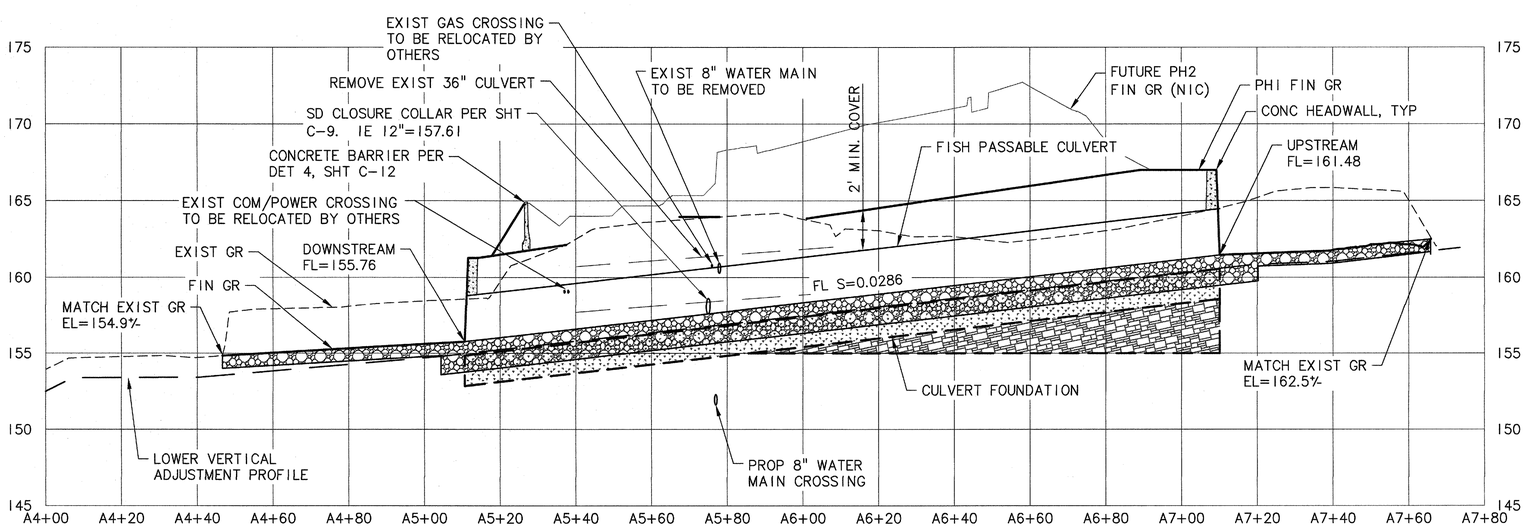

PROFILE – CULVERT A

SCALE: 1"=20' HORIZ, 1"=5' VERT

BID SET

Murray, Smith & Associates, Inc.
Engineers/Planners
121 S.W. Salmon, Suite 900
Portland, Oregon 97204
PHONE 503-225-8010
FAX 503-225-8022

City of Newberg

VILLA ROAD IMPROVEMENTS, HAWORTH TO CRESTVIEW - PH. 1 - CULVERT REPLACEMENTS

PROJECT NO. 702163 - CITY OF NEWBERG, OREGON

CULVERT A PLAN & PROFILE

REGISTERED PROFESSIONAL ENGINEER — OREGON — NICHOLAS J. MONTANEY — RENEWS 12-31-16

NO.	REVISION	DATE

SCALE: AS SHOWN
DATE: March 17, 2016
REVIEWED: NJM
DESIGNED: ARC
APPROVED: GEC
PLOT DATE: March 18, 2016
FILE:

SHEET

C-3

06 of 18

G:\PDX_PROJECTS\15\1699 – NEWBERG VILLA RD IMPROVEMENTS\CAD\SHEETS\15-1699-OR-PH1-C-CULVA.DWG

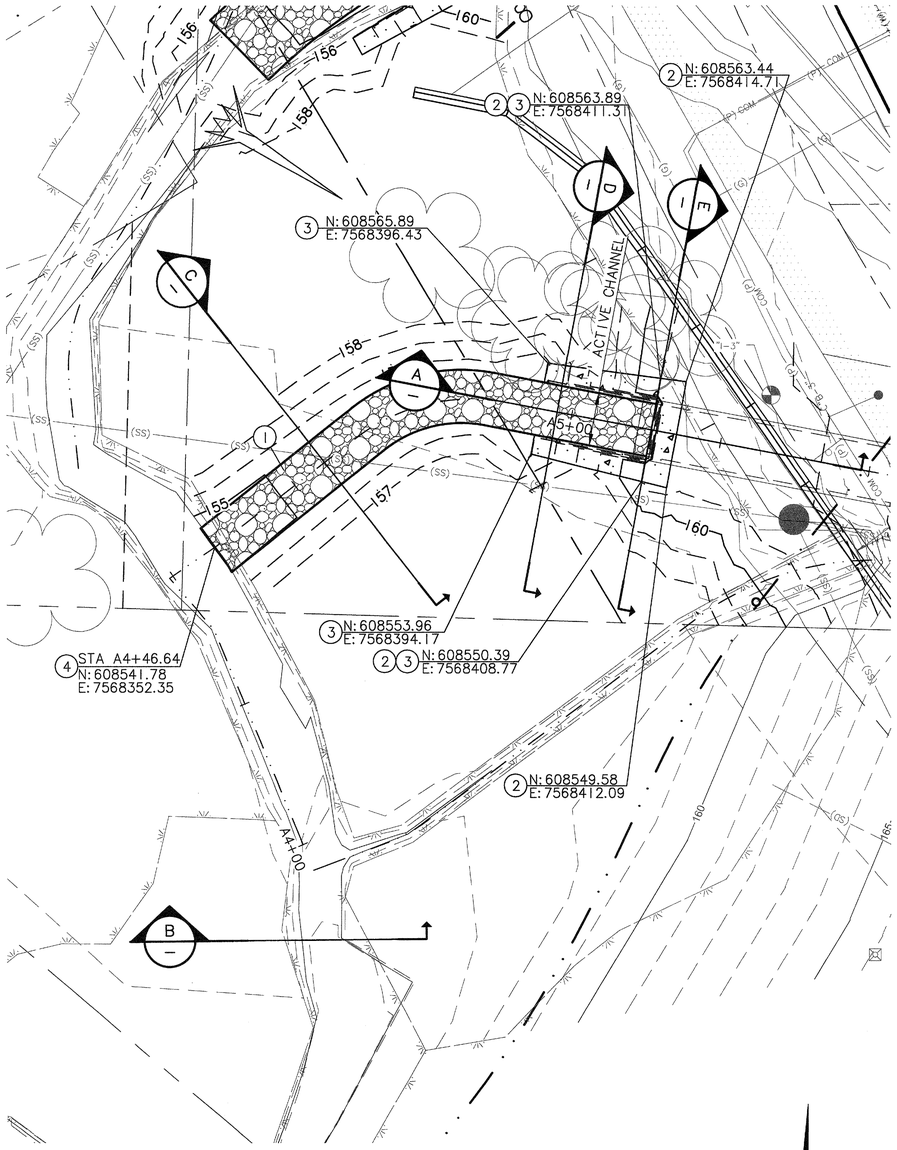

DOWNSTREAM CHANNEL GRADING – PLAN

SCALE: 1"=10'

10 5 0 10 20

SCALE IN FEET

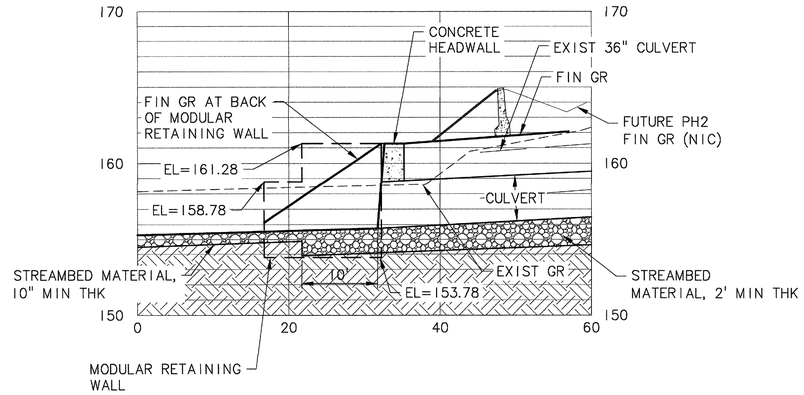

SECTION A

SCALE: 1"=10' HORIZ, 1"=5' VERT

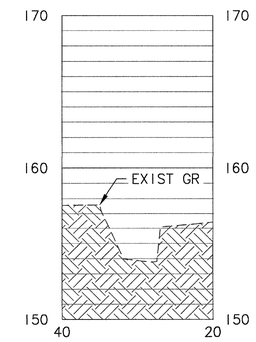

SECTION B

SCALE: 1"=10' HORIZ, 1"=5' VERT

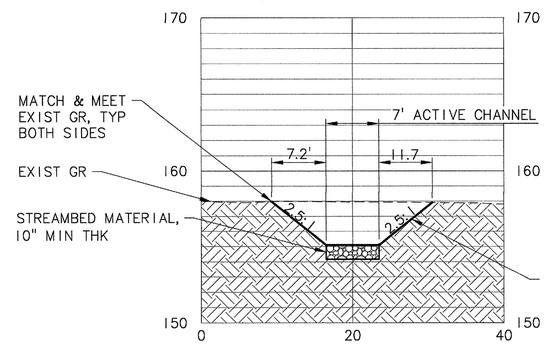

SECTION C

SCALE: 1"=10' HORIZ, 1"=5' VERT

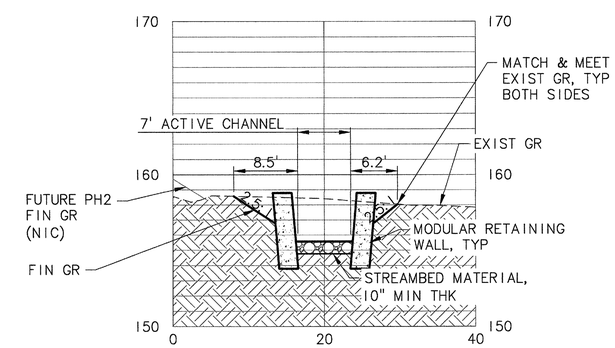

SECTION D

SCALE: 1"=10' HORIZ, 1"=5' VERT

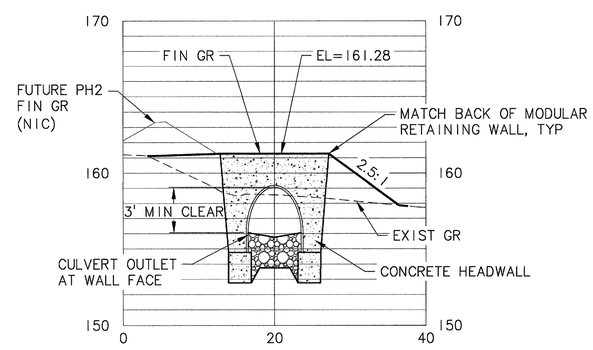

SECTION E

SCALE: 1"=10' HORIZ, 1"=5' VERT

CONSTRUCTION NOTES

1. REGRADE CHANNEL PER DET 3, SHT C-10
2. CONSTRUCT CONCRETE HEADWALL PER DET 5, SHT C-13
3. CONSTRUCT MODULAR RETAINING WALL PER DET 5, SHT C-12
4. ACTIVE CHANNEL WIDTH = 7'; BEGIN STREAMBED GRAVEL

LEGEND

- STREAMBED MATERIAL – PLAN
- STREAMBED MATERIAL – PROFILE
- CONC FOOTING, HEADWALL, OR MODULAR RETAINING WALL – PLAN
- CONC FOOTING, HEADWALL, OR MODULAR RETAINING WALL – PROFILE

BID SET

Murray, Smith & Associates, Inc.
Engineers/Planners
121 S.W. Salmon, Suite 900
Portland, Oregon 97204
PHONE 503-225-9010
FAX 503-225-9022

City of Newberg

VILLA ROAD IMPROVEMENTS, HAWORTH TO CRESTVIEW - PH. 1 - CULVERT REPLACEMENTS

PROJECT NO. 702163 - CITY OF NEWBERG, OREGON

CULVERT A DOWNSTREAM CHANNEL GRADING

REGISTERED PROFESSIONAL ENGINEER — OREGON — NICHOLAS J. MANCUSO — RENEWS 12-31-16

NO.	REVISION	DATE

SCALE: AS SHOWN
DATE: March 17, 2016
REVIEWED: NJM
DESIGNED: ARC
APPROVED: GEC
PLOT DATE: March 17, 2016
FILE:

SHEET C-4

G:\PDX_PROJECTS\15\1699 – NEWBERG VILLA RD IMPROVEMENTS\CAD\SHEETS\15-1699-OR-PH1-C-CULVA.DWG

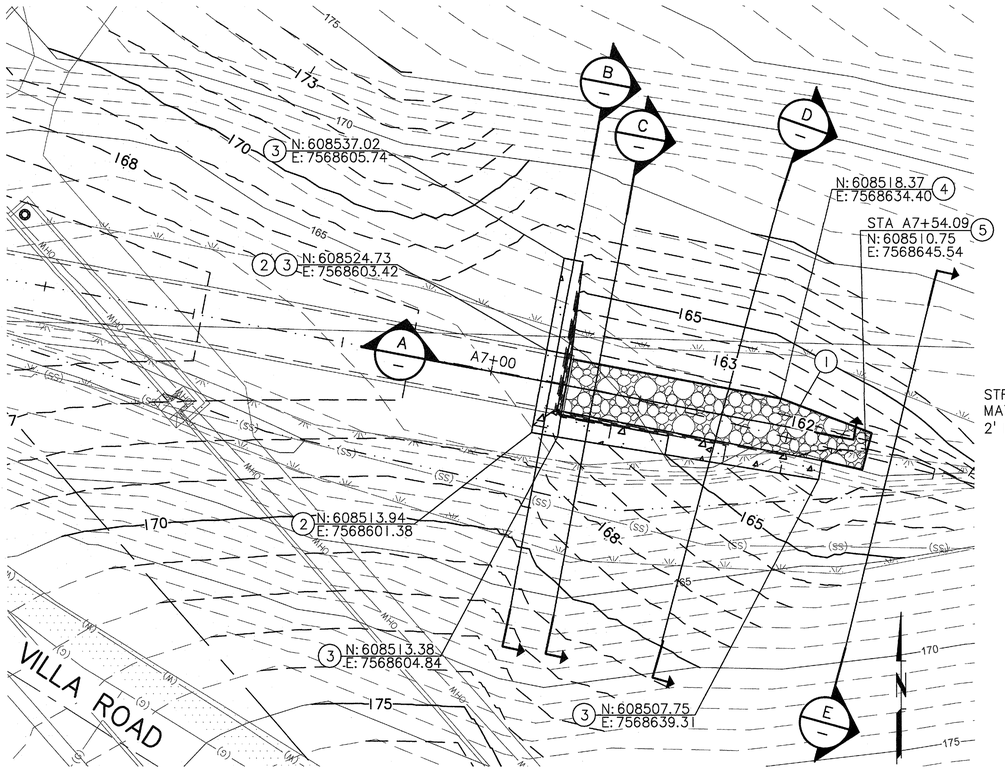

UPSTREAM CHANNEL GRADING – PLAN

SCALE: 1"=10'

10 5 0 10 20

SCALE IN FEET

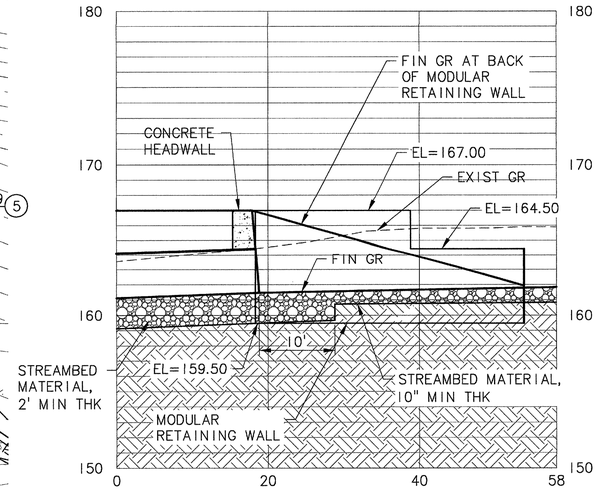

SECTION A

SCALE: 1"=10' HORIZ, 1"=5' VERT

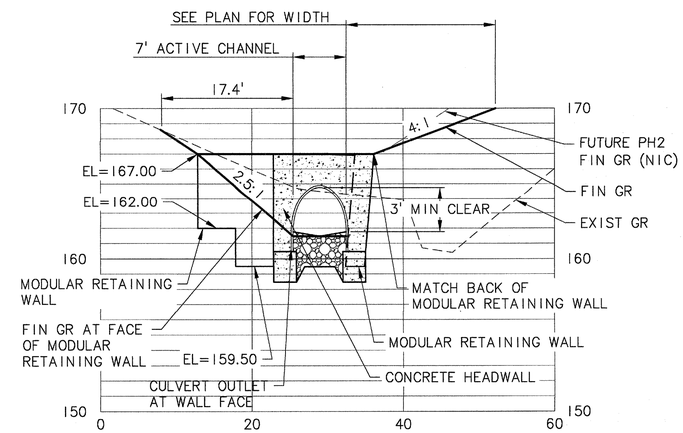

SECTION B

SCALE: 1"=10' HORIZ, 1"=5' VERT

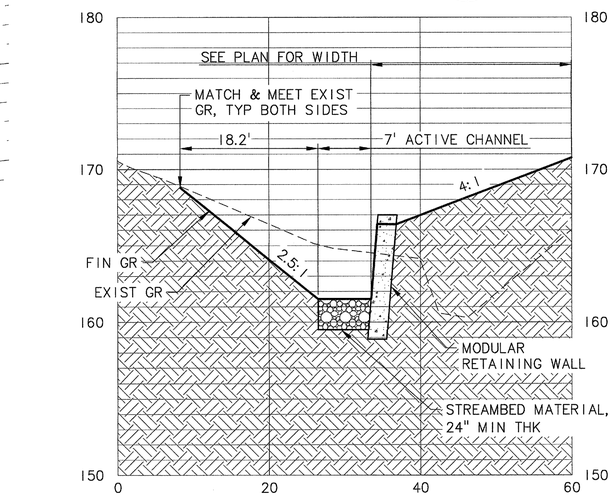

SECTION C

SCALE: 1"=10' HORIZ, 1"=5' VERT

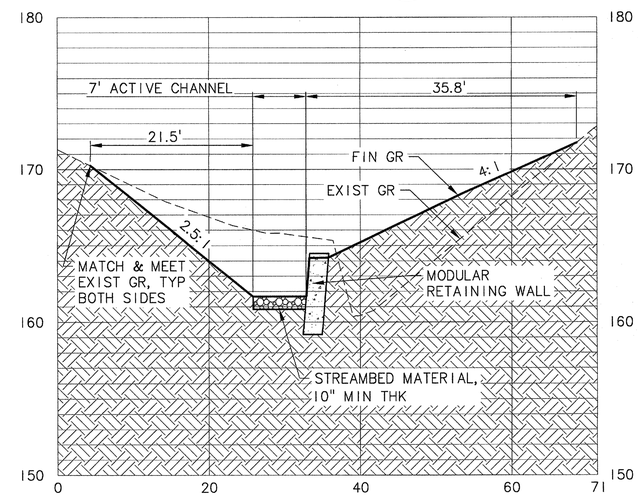

SECTION D

SCALE: 1"=10' HORIZ, 1"=5' VERT

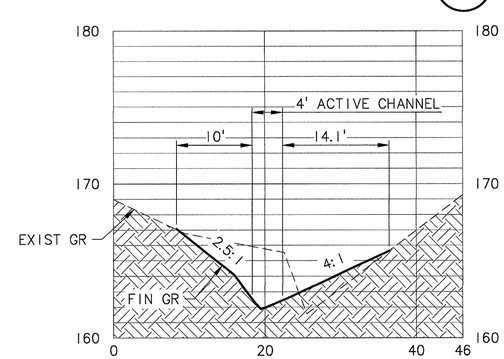

SECTION E

SCALE: 1"=10' HORIZ, 1"=5' VERT

CONSTRUCTION NOTES

1. REGRADE CHANNEL PER DET 3, SHT C-10
2. CONSTRUCT CONCRETE HEADWALL PER DET 5, SHT C-13
3. CONSTRUCT MODULAR RETAINING WALL PER DET 5, SHT C-12
4. ACTIVE CHANNEL WIDTH = 7'; BEGIN STREAMBED GRAVEL WIDTH TAPER
5. ACTIVE CHANNEL WIDTH = 5'; END STREAMBED GRAVEL WIDTH TAPER

LEGEND

- STREAMBED MATERIAL – PLAN
- STREAMBED MATERIAL – PROFILE
- CONC FOOTING, HEADWALL, OR MODULAR RETAINING WALL – PLAN
- CONC FOOTING, HEADWALL, OR MODULAR RETAINING WALL – PROFILE

BID SET

Murray, Smith & Associates, Inc.
Engineers/Planners
121 S.W. Salmon, Suite 900
Portland, Oregon 97204
PHONE 503-225-9010
FAX 503-225-9022

City of Newberg

VILLA ROAD IMPROVEMENTS, HAWORTH TO CRESTVIEW - PH. 1 - CULVERT REPLACEMENTS

PROJECT NO. 702163 - CITY OF NEWBERG, OREGON

CULVERT A UPSTREAM CHANNEL GRADING

REGISTERED PROFESSIONAL ENGINEER 72710PE OREGON JUNE 9, 2006 NICHOLAS J. MONTGOMERY

RENEWS 12-31-16

NO.	REVISION	DATE

SCALE: AS SHOWN
DATE: March 17, 2016
REVIEWED: NJM
DESIGNED: ARC
APPROVED: GEC
PLOT DATE: March 17, 2016
FILE:

SHEET

C-5

08 of 18

G:\PDX_PROJECTS\15\1699 – NEWBERG VILLA RD IMPROVEMENTS\CAD\SHEETS\15-1699-OR-PH1-C-CULVA.DWG

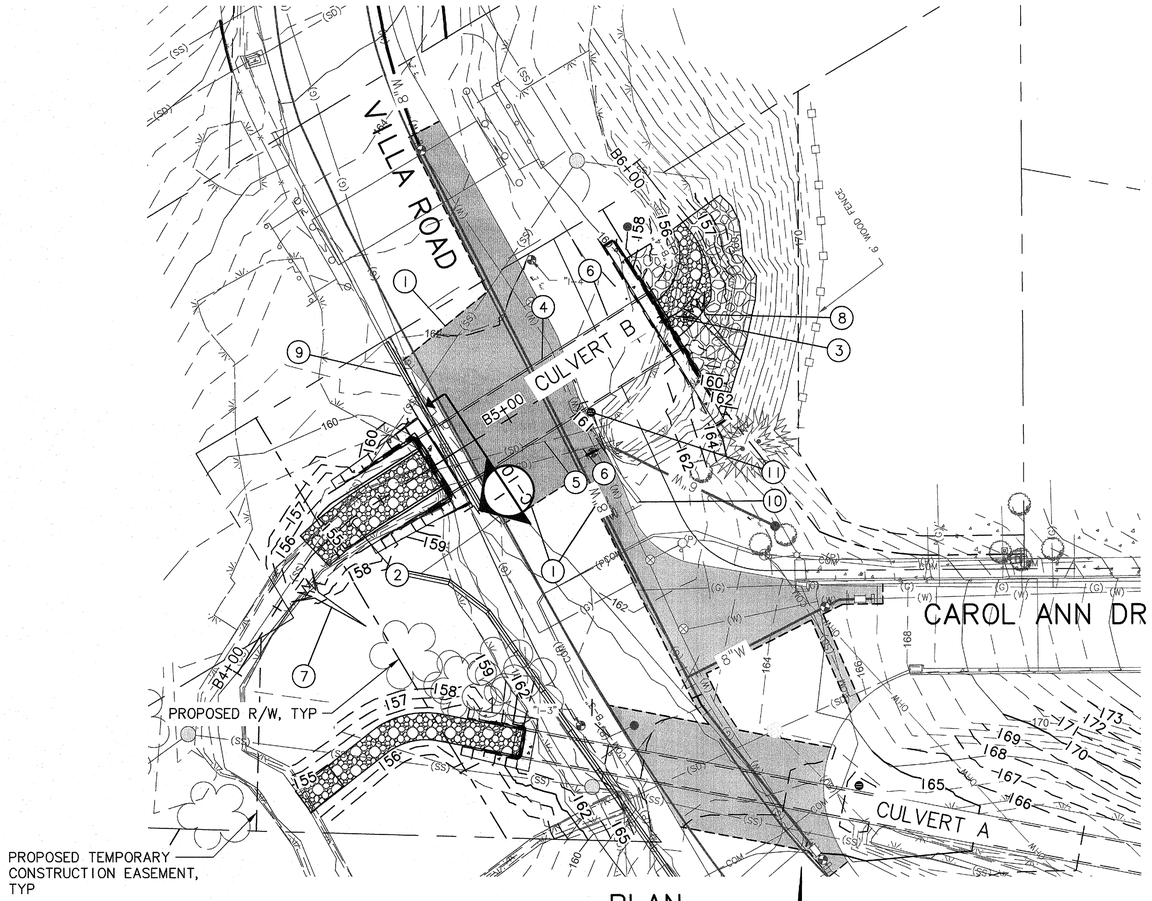

PLAN

SCALE: 1"=20'

20 10 0 20 40

SCALE IN FEET

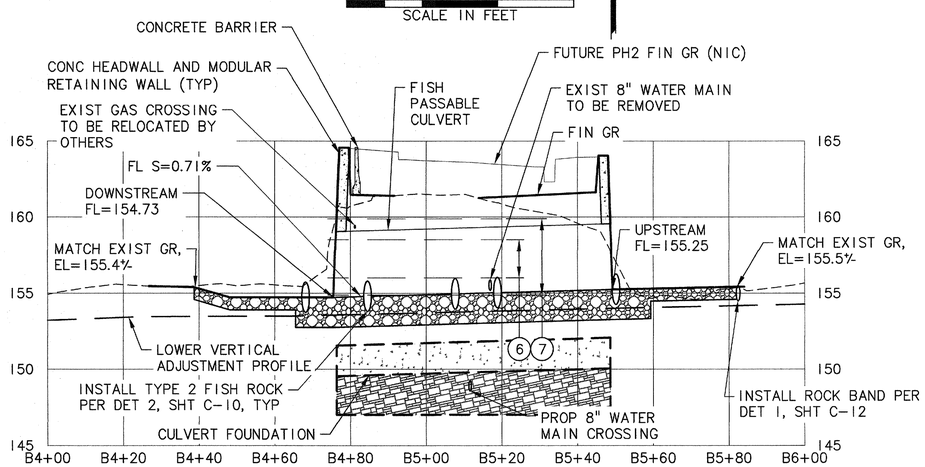

PROFILE – CULVERT B

SCALE: 1"=20' HORIZ, 1"=5' VERT

NOTES:

1. REMOVE ALL STREAMBED SEDIMENT AND REGRADE CHANNEL TO THE UPSTREAM AND DOWNSTREAM LIMITS SHOWN.

2. PROFILE INFORMATION FOR EXISTING UTILITIES IS SHOWN AT ASSUMED 3 FEET OF COVER. CONTRACTOR SHALL FIELD VERIFY ACTUAL LOCATIONS.

3. LOWER VERTICAL ADJUSTMENT PROFILE (LVAP) SHOWN FOR PERMITTING PURPOSES ONLY.

CONSTRUCTION NOTES

1. MATCH AND MEET EXIST ROADWAY SURFACE, PROVIDE AC PVMT SURFACE RESTORATION TO EXIST GR PER DET 5, SHT C-11
2. CONSTRUCT DOWNSTREAM CHANNEL GRADING PER SHT C-7
3. CONSTRUCT UPSTREAM CHANNEL GRADING PER SHT C-8
4. INSTALL CULVERT B PER DET 1, SHT C-10
5. REMOVE EXTG 30" CULVERT
6. REMOVE EXTG 60" CULVERT
7. INSTALL FISH LOG IN NATIVE BANK PER DET 1, SHT C-13
8. INSTALL FISH LOG IN RIPRAP PER DET 2, SHT C-13
9. FURNISH AND INSTALL 50 LF CONCRETE BARRIER. CONNECT TO EXIST BARRIER.
10. SALVAGE AND MOVE EXISTING BARRIER. SEE SHT C-3 AND DET 4, SHT C-12.
11. INSTALL AREA DRAIN PER SHEET C-9

HYDRAULIC DATA

ITEM	ORDINARY HIGH WATER	DESIGN FLOOOD	MAX. PROBABLE FLOOD
DISCHARGE (CFS)	35.87	426	494
RECURRENCE INTERVAL (YEARS)	< 2	100	500
WATER SURFACE ELEVATION AT UPSTREAM CULVERT FACE (FT)	156.92	160.90	161.26
WATER SURFACE ELEVATION AT DOWNSTREAM CULVERT FACE (FT)	156.89	160.44	160.69
VELOCITY (FPS)	1.1	4.5	4.9

SHEET LEGEND

- CONCRETE HEADWALL/MODULAR RETAINING WALL
- STREAMBED MATERIAL
- WILLOW BUNDLES IN RIPRAP PER DET 3, SHT C-13
- STRUCTURE EXCAVATION AND BACKFILL BELOW ELEVATIONS SHOWN

BID SET

MSA Murray, Smith & Associates, Inc. Engineers/Planners
121 S.W. Salmon, Suite 900 Portland, Oregon 97204
PHONE 503-225-9010 FAX 503-225-9022

City of Newberg

VILLA ROAD IMPROVEMENTS, HAWORTH TO CRESTVIEW - PH. 1 - CULVERT REPLACEMENTS

PROJECT NO. 702163 - CITY OF NEWBERG, OREGON

CULVERT B PLAN & PROFILE

REGISTERED PROFESSIONAL ENGINEER 72710PE OREGON JUNE 8, 2016 NICHOLAS J. MONTANTHEY RENEWS 12-31-16 3/18/16

NO.	REVISION	DATE

SCALE: AS SHOWN
DATE: March 17, 2016
REVIEWED: NJM
DESIGNED: ARC
APPROVED: GEC
PLOT DATE: March 18, 2016
FILE:

SHEET

C-6

G:\PDX_PROJECTS\15\1699 – NEWBERG VILLA RD IMPROVEMENTS\CAD\SHEETS\15-1699-OR-PH1-C-CULVB.DWG

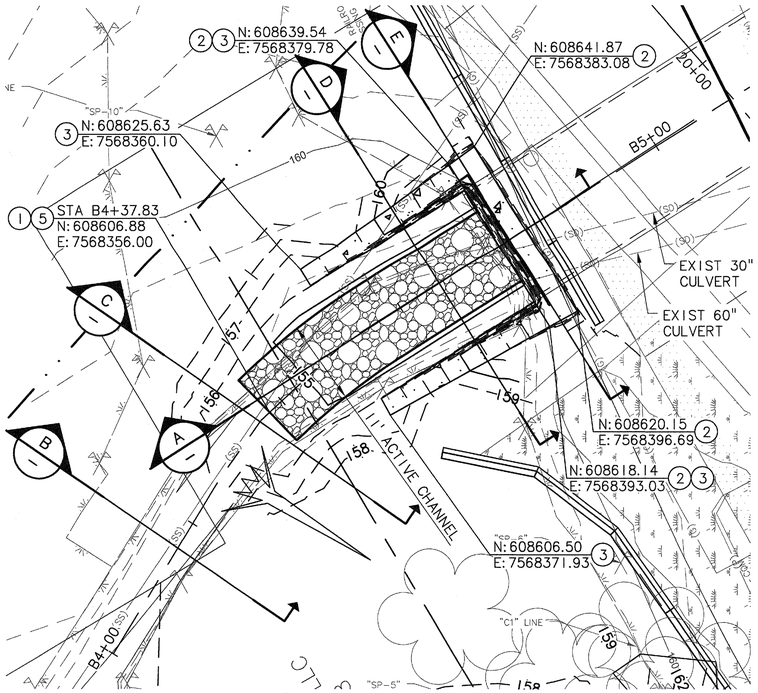

DOWNSTREAM CHANNEL GRADING

SCALE: 1"=10'

10 5 0 10 20

SCALE IN FEET

N

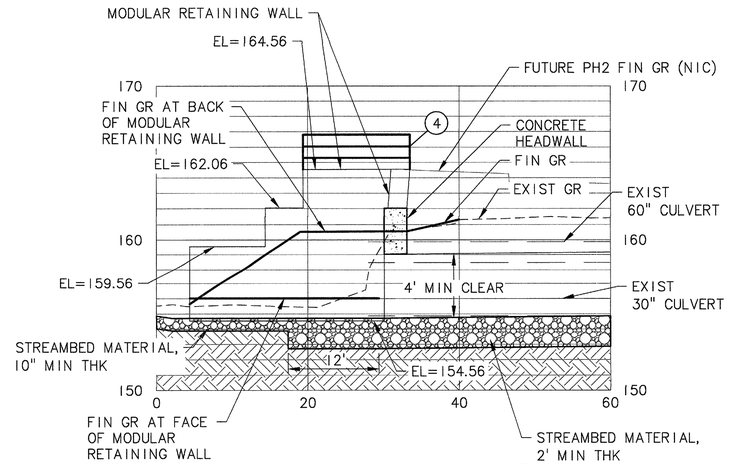

SECTION A

SCALE: 1"=10' HORIZ, 1"=5' VERT

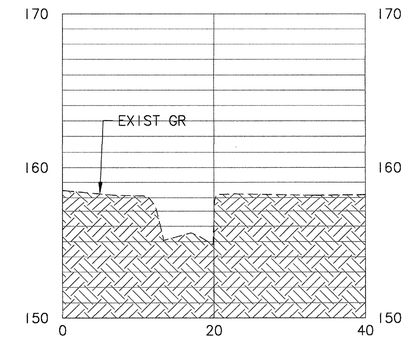

SECTION B

SCALE: 1"=10' HORIZ, 1"=5' VERT

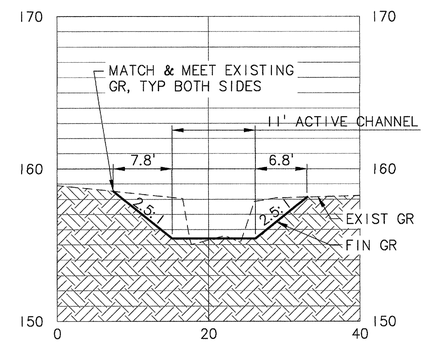

SECTION C

SCALE: 1"=10' HORIZ, 1"=5' VERT

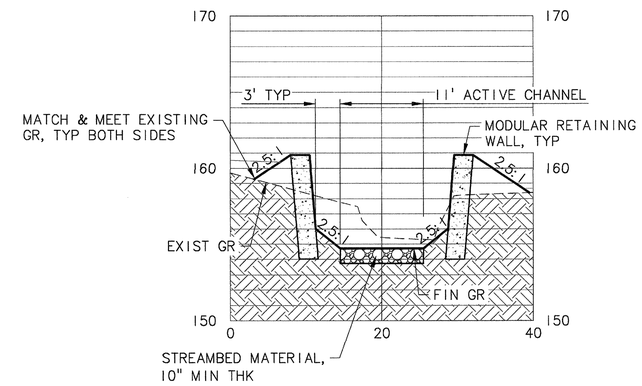

SECTION D

SCALE: 1"=10' HORIZ, 1"=5' VERT

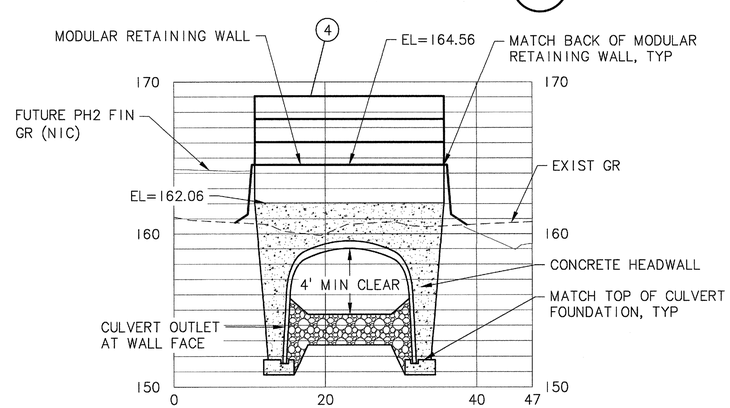

SECTION E

SCALE: 1"=10' HORIZ, 1"=5' VERT

CONSTRUCTION NOTES

1. REGRADE CHANNEL PER DET 3, SHT C-10
2. CONSTRUCT CONCRETE HEADWALL PER DET 5, SHT C-13
3. CONSTRUCT MODULAR RETAINING WALL PER DET 5, SHT C-12
4. INSTALL BOLT-DOWN PEDESTRIAN THREE RAIL HANDRAIL PER OSD RD770 & RD771
5. ACTIVE CHANNEL WIDTH = 11'; BEGIN STREAMBED GRAVEL

LEGEND

- STREAMBED MATERIAL – PLAN
- STREAMBED MATERIAL – PROFILE
- CONC FOOTING, HEADWALL, OR MODULAR RETAINING WALL – PLAN
- CONC FOOTING, HEADWALL, OR MODULAR RETAINING WALL – PROFILE

BID SET

Murray, Smith & Associates, Inc.
Engineers/Planners
121 S.W. Salmon, Suite 900 Portland, Oregon 97204
PHONE 503-225-9010 FAX 503-225-0022

City of Newberg

VILLA ROAD IMPROVEMENTS, HAWORTH TO CRESTVIEW - PH. 1 - CULVERT REPLACEMENTS

PROJECT NO. 702163 - CITY OF NEWBERG, OREGON

CULVERT B DOWNSTREAM CHANNEL GRADING

REGISTERED PROFESSIONAL ENGINEER #72710PE OREGON JUNE 8, 2012 NICHOLAS J. MONAHAN

3/16/16

RENEWS 12-31-16

NO.	REVISION	DATE

SCALE: AS SHOWN
DATE: March 17, 2016
REVIEWED: NJM
DESIGNED: ARC
APPROVED: GEC
PLOT DATE: March 17, 2016
FILE:

SHEET

C-7

G:\PDX_PROJECTS\15\1699 – NEWBERG VILLA RD IMPROVEMENTS\CAD\SHEETS\15-1699-OR-PH1-C-CULVB.DWG

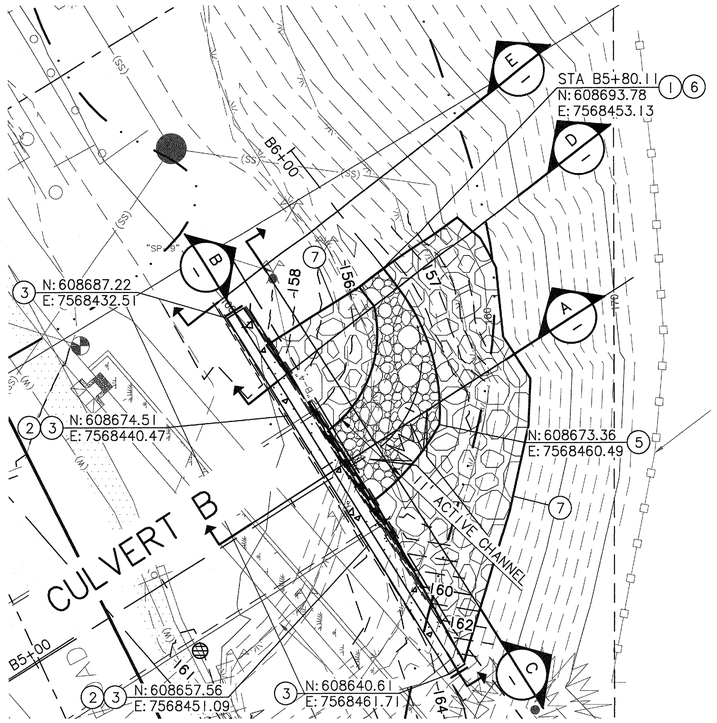

UPSTREAM CHANNEL GRADING

SCALE: 1"=10'

10 5 0 10 20

SCALE IN FEET

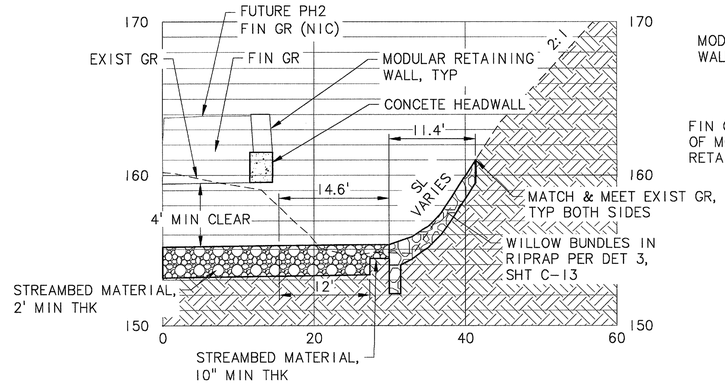

SECTION A

SCALE: 1"=10' HORIZ, 1"=5' VERT

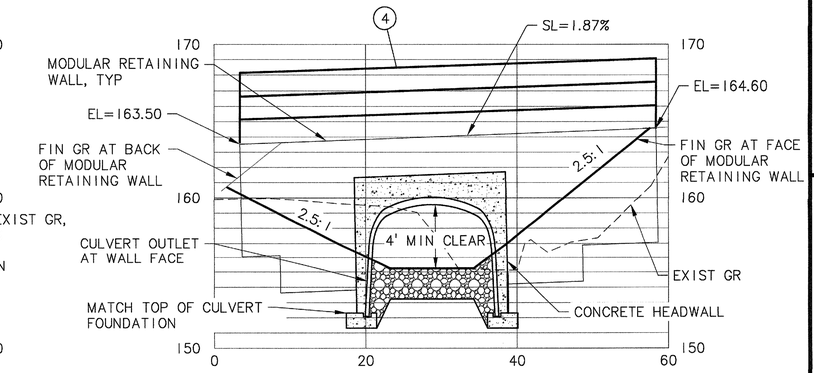

SECTION B

SCALE: 1"=10' HORIZ, 1"=5' VERT

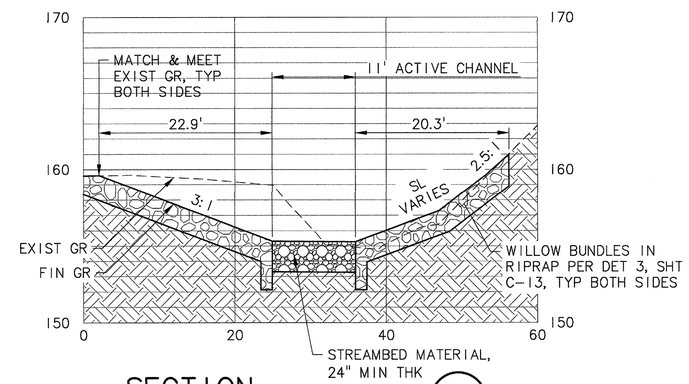

SECTION C

SCALE: 1"=10' HORIZ, 1"=5' VERT

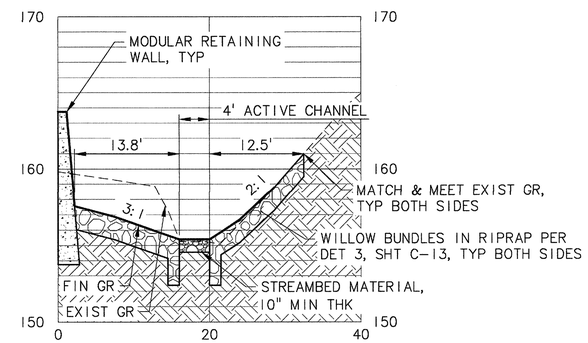

SECTION D

SCALE: 1"=10' HORIZ, 1"=5' VERT

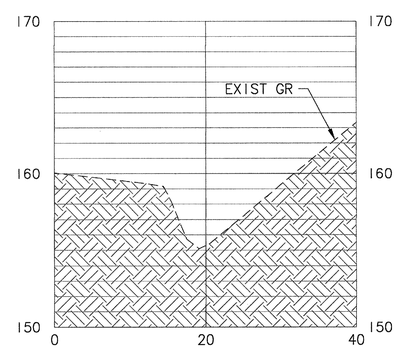

SECTION E

SCALE: 1"=10' HORIZ, 1"=5' VERT

CONSTRUCTION NOTES

1. REGRADE CHANNEL PER DET 3, SHT C-10
2. CONSTRUCT CONCRETE HEADWALL PER DET 5, SHT C-13
3. CONSTRUCT MODULAR RETAINING WALL PER DET 5, SHT C-12
4. INSTALL BOLT-DOWN PEDESTRIAN THREE RAIL HANDRAIL PER OSD RD770 & RD771
5. ACTIVE CHANNEL WIDTH = 11'; BEGIN STREAMBED GRAVEL WIDTH TAPER
6. ACTIVE CHANNEL WIDTH = 4'; END STREAMBED GRAVEL WIDTH TAPER
7. PROVIDE WILLOW BUNDLES IN RIPRAP PER DET 3, SHT C-13

- STREAMBED MATERIAL – PLAN
- STREAMBED MATERIAL – PROFILE
- WILLOW BUNDLES IN RIPRAP – PLAN
- WILLOW BUNDLES IN RIPRAP – PROFILE
- CONC FOOTING, HEADWALL, OR MODULAR RETAINING WALL – PLAN
- CONC FOOTING, HEADWALL, OR MODULAR RETAINING WALL – PROFILE

BID SET

MSA Murray, Smith & Associates, Inc. Engineers/Planners
121 S.W. Salmon, Suite 900 Portland, Oregon 97204
PHONE 503-225-9010 FAX 503-225-9022

City of Newberg

VILLA ROAD IMPROVEMENTS, HAWORTH TO CRESTVIEW - PH. 1 - CULVERT REPLACEMENTS

PROJECT NO. 702163 - CITY OF NEWBERG, OREGON

CULVERT B UPSTREAM CHANNEL GRADING

REGISTERED PROFESSIONAL ENGINEER 72710PE OREGON JULY 8, 2003 NICHOLAS J. MCMONAGLE RENEWS 12-31-16

NO.	REVISION	DATE

SCALE: AS SHOWN
DATE: March 17, 2016
REVIEWED: NJM
DESIGNED: ARC
APPROVED: GEC
PLOT DATE: March 17, 2016
FILE:

SHEET C-8

G:\PDX_PROJECTS\15\1699 – NEWBERG VILLA RD IMPROVEMENTS\CAD\SHEETS\15-1699-OR-PH1-C-CULVB.DWG

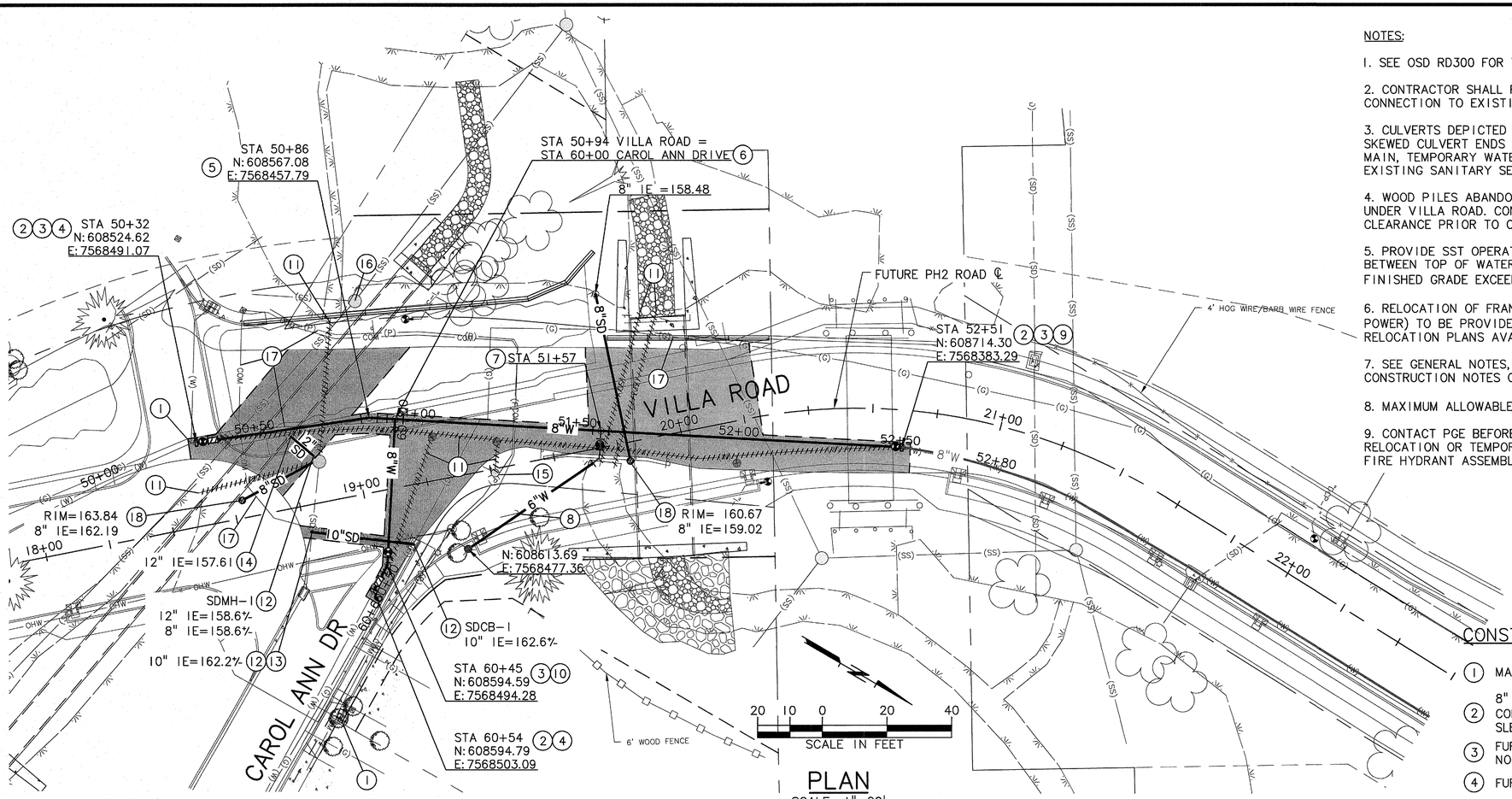

PLAN

SCALE: 1"=20'

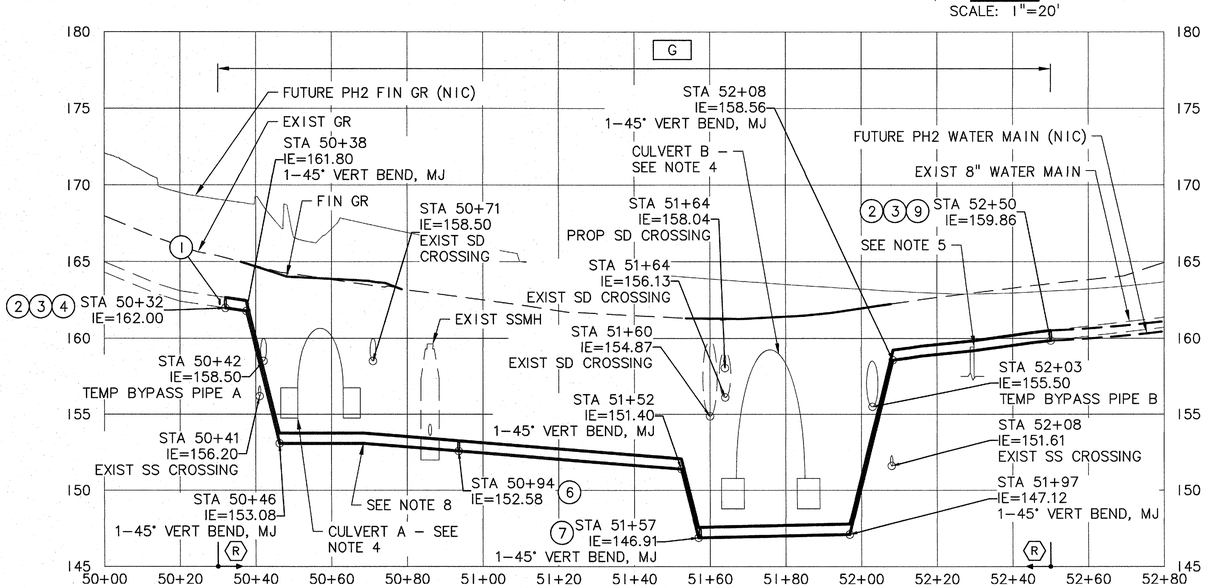

VILLA ROAD WATER MAIN PROFILE

SCALE: 1"=20' HORIZ, 1"=5' VERT

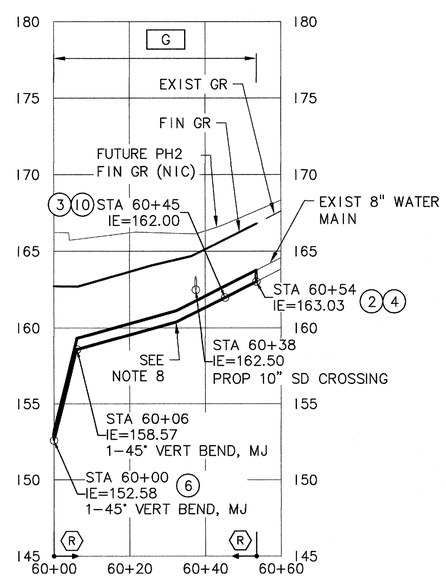

CAROL ANN DRIVE WATER MAIN PROFILE

SCALE: 1"=20' HORIZ, 1"=5' VERT

NOTES:

1. SEE OSD RD300 FOR TRENCH BACKFILL AND PIPE BEDDING DETAILS.

2. CONTRACTOR SHALL REMOVE EXISTING WATER MAIN BETWEEN POINTS OF CONNECTION TO EXISTING MAIN.

3. CULVERTS DEPICTED ON PROFILE AT WATER MAIN CENTERLINE STATIONING. SKEWED CULVERT ENDS ARE NOT SHOWN. CONTRACTOR SHALL FIELD VERIFY WATER MAIN, TEMPORARY WATER MANAGEMENT BYPASS PIPING, CULVERT FOUNDATION AND EXISTING SANITARY SEWER CONFLICTS PRIOR TO CONSTRUCTION.

4. WOOD PILES ABANDONED DURING PREVIOUS TRESTLE CONSTRUCTION MAY REMAIN UNDER VILLA ROAD. CONTRACTOR SHALL FIELD VERIFY WATER MAIN ALIGNMENT FOR CLEARANCE PRIOR TO CONSTRUCTION.

5. PROVIDE SST OPERATOR NUT AND EXTENSION FOR GATE VALVES WHEN DISTANCE BETWEEN TOP OF WATER MAIN ELEVATION AND FINISHED GRADE OR FUTURE PHASE 2 FINISHED GRADE EXCEEDS 3'.

6. RELOCATION OF FRANCHISE UTILITIES (GAS, COMMUNICATION, AND UNDERGROUND POWER) TO BE PROVIDED BY OTHERS AND COMPLETED PRIOR TO CONSTRUCTION. RELOCATION PLANS AVAILABLE UPON REQUEST.

7. SEE GENERAL NOTES, SEPARATION STATEMENT, MATERIAL NOTES, AND CONSTRUCTION NOTES ON SHEET G-2 FOR ADDITIONAL INFORMATION.

8. MAXIMUM ALLOWABLE 8" DIA PIPE DEFLECTION SHALL BE 2.5°, TYP ALL JOINTS.

9. CONTACT PGE BEFORE EXCAVATING FIRE HYDRANT ASSEMBLY WATER MAIN. RELOCATION OR TEMPORARY SUPPORT FOR POLE ANCHOR SHALL BE INCIDENTAL TO FIRE HYDRANT ASSEMBLY.

LEGEND

ACP TRENCH RESURFACING PER DET 5, SHT C-11

EXIST WATER OR STORM MAIN TO BE REMOVED

CONSTRUCTION NOTES

1. MAINTAIN EXIST WATER SERVICE/SUPPLY DURING CONSTRUCTION
2. 8" CONNECTION TO EXIST 8" WATER MAIN. FURNISH & INSTALL COLLAR THRUST BLOCK PER DET 3, SHT C-11 & 1-8" LONG SLEEVE, MJ
3. FURNISH & INSTALL 1-8" GATE VALVE, MJ PER OSD RD258. SEE NOTE 5.
4. FURNISH & INSTALL 1-8" DI SPOOL
5. FURNISH & INSTALL 1-8" 11¼° HORIZ BEND, MJ
6. FURNISH & INSTALL 1-8" TEE, MJ
7. FURNISH & INSTALL 1-8"x6" TEE, MJxMJxFLG, 1-6" 45° HORIZ BEND, FL, & 1-FH ASSY PER DET 4, SHT C-11
8. PGE POLE ANCHOR. SEE NOTE 9.
9. FUTURE PHASE 2 POINT OF CONNECTION
10. FURNISH & INSTALL 1-8" HORIZ 22½° BEND, MJ
11. REMOVE EXIST WATER OR STORM MAIN
12. CONNECT TO EXIST SD STRUCTURE OR PIPE
13. FURNISH & INSTALL 1-12"X10" SD PIPE TEE
14. CONNECT 12" SD TO CULVERT A W/ CONC CLOSURE COLLAR PER DET 2, SHT C-11
15. REMOVE EXIST FH ASSY & RETURN TO CITY MAINTENANCE YARD
16. ADJUST SS MANHOLE TO FIN GR PER DET 4, SHT C-12
17. RELOCATION OF FRANCHISE UTILITIES BY OTHERS (NIC). SEE NOTE 6.
18. FURNISH & INSTALL AREA DRAINAGE BASIN PER OSSD RD374.
19. FURNISH & INSTALL AREA DRAINAGE BASIN PER OSSD RD374.

BID SET

MSA Murray, Smith & Associates, Inc. Engineers/Planners
121 S.W. Salmon, Suite 900 Portland, Oregon 97204
PHONE 503-225-9010 FAX 503-225-9022

City of Newberg

VILLA ROAD IMPROVEMENTS, HAWORTH TO CRESTVIEW - PH. 1 - CULVERT REPLACEMENTS

PROJECT NO. 702163 - CITY OF NEWBERG, OREGON

COMPOSITE UTILITY PLAN

REGISTERED PROFESSIONAL ENGINEER OREGON JUNE 3, 2016 NICHOLAS J. MOMMENEY 82170PE RENEWS 12-31-16

NO.	REVISION	DATE

SCALE: AS SHOWN
DATE: March 17, 2016
REVIEWED: NJM
DESIGNED: SBB
APPROVED: GEC
PLOT DATE: March 18, 2016
FILE:

SHEET

G:\PDX_PROJECTS\15\1699 - NEWBERG VILLA RD IMPROVEMENTS\CAD\SHEETS\15-1699-OR-PH1-C-UTIL PLN-PRF.DWG

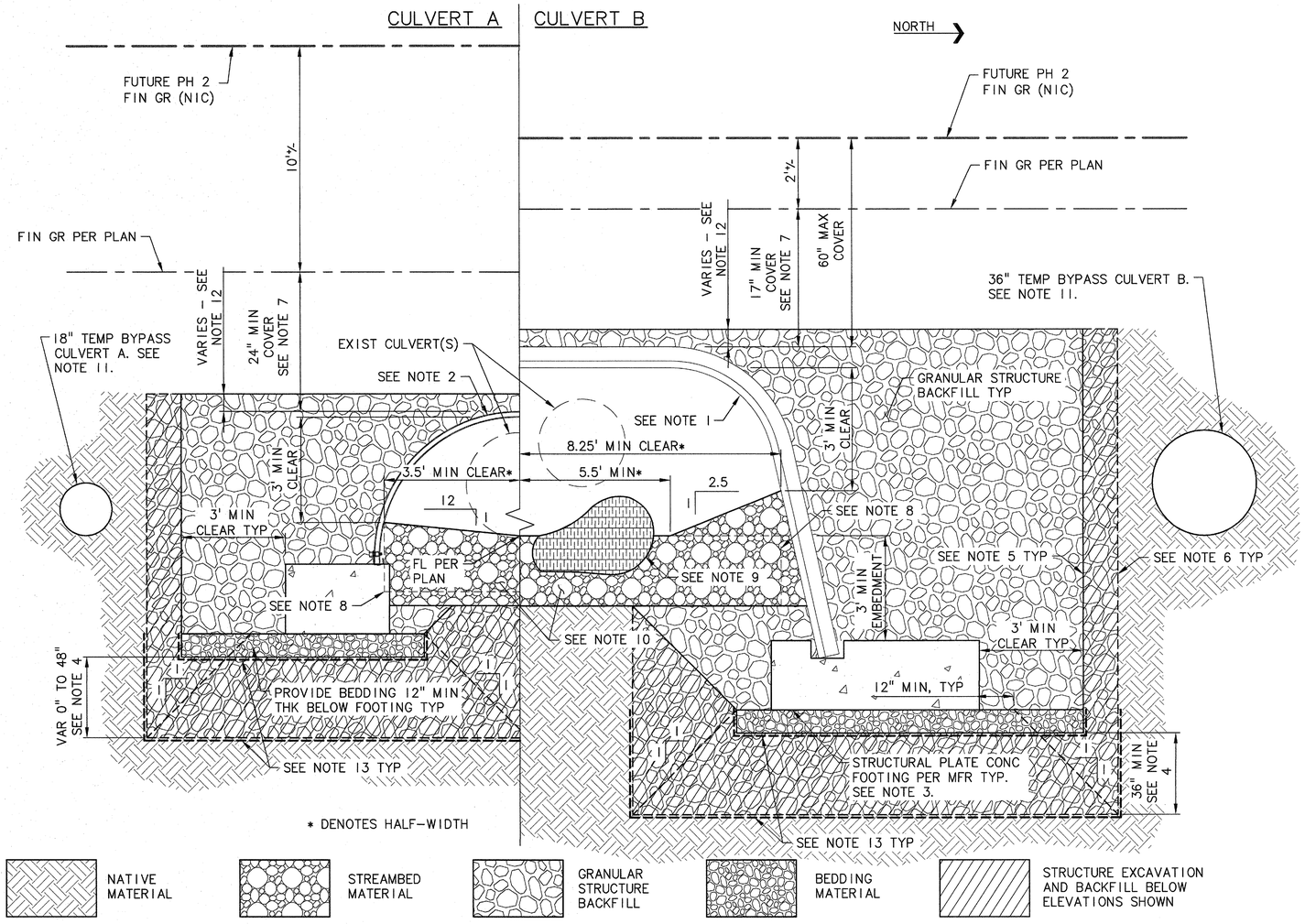

NOTES:

1. PROVIDE 200 INCH X 90 INCH STRUCTURAL PLATE ARCH – TYPE B6 ALUMINUM BOX CULVERT, STRUCTURE NO. 38 BY CONTECH OR APPROVED EQUAL.

2. PROVIDE 84 INCH X 44 INCH STRUCTURAL PLATE ARCH – 0.125" THK ALUMINUM BY CONTECH OR APPROVED EQUAL.

3. CULVERT FOUNDATIONS SHALL BE DESIGNED FOR A SERVICE BEARING RESISTANCE OF 2,000 PSF. COORDINATE WITH THE ENGINEER TO APPROVE PREPARED SUBGRADE PRIOR TO PLACEMENT OF CONC FOOTINGS.

4. COORDINATE WITH ENGINEER TO FIELD INSPECT FOUNDATION SOIL CONDITIONS PRIOR TO COMPLETING STRUCTURE EXCAVATION AND BACKFILL BELOW ELEVATIONS SHOWN.

5. VERTICAL TRENCH IDENTIFIED DEFINES PAY LIMITS OF STRUCTURE EXCAVATION, GRANULAR STRUCTURE BACKFILL AND TRENCH RESURFACING. USE OF LAYBACK SLOPE OR SHORING SHALL BE INCIDENTAL TO STRUCTURE EXCAVATION.

6. VERTICAL TRENCH IDENTIFIED DEFINES PAY LIMITS OF STRUCTURE EXCAVATION AND BACKFILL BELOW ELEVATIONS SHOWN. SEE SPECIFICATIONS FOR OTHER INCIDENTAL WORK.

7. PROVIDE GRANULAR STRUCTURE BACKFILL AND ACP TRENCH RESURFACING COVER MATERIAL WITHIN EXISTING PAVED ROADWAYS. PROVIDE GRANULAR STRUCTURE BACKFILL TO FINISH GRADE WITHIN FUTURE PHASE 2 PAVED AREAS.

8. SCOUR PRISM SHOWN FOR REFERENCE ONLY.

9. PROVIDE FISH ROCK PER DETAIL 2, THIS SHEET.

10. STREAMBED MATERIAL COMPOSITION VARIES FOR CULVERTS A AND B. SEE SPECIFICATIONS.

11. PROVIDE PIPE SUPPORT, SHORING AND/OR ANCHORS AS REQUIRED FOR STRUCTURE EXCAVATION BELOW ELEVATIONS SHOWN.

12. PROVIDE 6" MIN THK GRANULAR STRUCTURE BACKFILL OVER STRUCTURAL PLATE ARCH. PROVIDE ADDITIONAL VARIABLE THK AS REQUIRED TO MEET THE BASE ELEVATION OF ACP TRENCH RESURFACING PAVEMENT SECTION PER DET 5, SHT C-11.

13. PROVIDE A SINGLE LAYER OF NON-WOVEN SUBGRADE GEOTEXTILE BETWEEN UNDISTURBED NATIVE SOIL AND BEDDING OR GRANULAR STRUCTURE BACKFILL. EXTEND GEOTEXTILE VERTICALLY FROM NATIVE SOIL TO BOTTOM OF FOOTING ELEVATION.

CULVERT SECTION 1 / C-3
SCALE: NTS

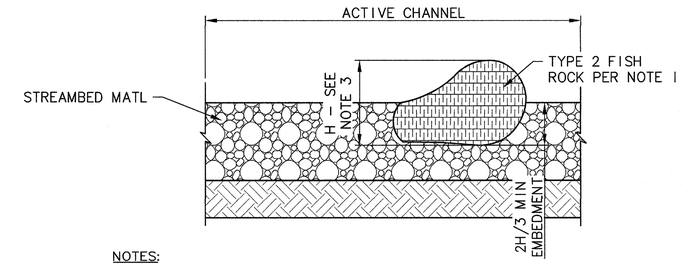

NOTES:

1. FISH ROCKS SHALL BE RANDOMLY PLACED WITHIN THE ACTIVE CHANNEL OF CULVERT B AND ITS UPSTREAM/DOWNSTREAM CHANNEL.

2. PROVIDE UP TO 5 FISH ROCKS AT LOCATIONS APPROVED BY THE ENGINEER.

3. DIMENSION 'H' IS TYPICAL FISH ROCK HEIGHT. FISH ROCK TO BE EMBEDDED IN STREAMBED MATERIAL TO ⅔ OF 'H'.

FISH ROCK DETAIL 2 / C-6
SCALE: NTS

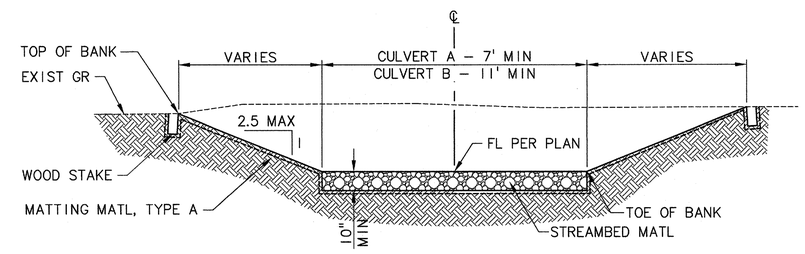

CHANNEL DETAIL 3 / C-4
SCALE: NTS

BID SET

MSA Murray, Smith & Associates, Inc.
Engineers/Planners
121 S.W. Salmon, Suite 900 Portland, Oregon 97204
PHONE 503-225-9010 FAX 503-225-9022

City of Newberg

VILLA ROAD IMPROVEMENTS, HAWORTH TO CRESTVIEW - PH. 1 - CULVERT REPLACEMENTS
PROJECT NO. 702163 - CITY OF NEWBERG, OREGON

DETAILS

REGISTERED PROFESSIONAL ENGINEER 72710PE OREGON JULY 8, 2016 NICHOLAS J. MCMANUS
RENEWS 12-31-16

NO.	REVISION	DATE

SCALE: AS SHOWN
DATE: March 17, 2016
REVIEWED: NJM
DESIGNED: SBB
APPROVED: GEC
PLOT DATE: March 18, 2016
FILE:

SHEET
C-10
13 of 18

G:\PDX_PROJECTS\15\1699 – NEWBERG VILLA RD IMPROVEMENTS\CAD\SHEETS\15-1699-OR-PH1-C-DET.DWG

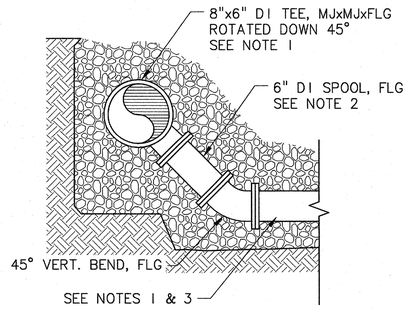

NOTES:

1. ALL PIPING AND FITTINGS TO BE RESTRAINED JOINT.

2. PROVIDE SPOOL IF NECESSARY FOR INVERT ADJUSTMENTS.

3. SEE DETAIL 4, THIS SHEET FOR CONTINUATION.

6" HYDRANT BLOW-OFF FITTING (1 / –)

SCALE: NTS

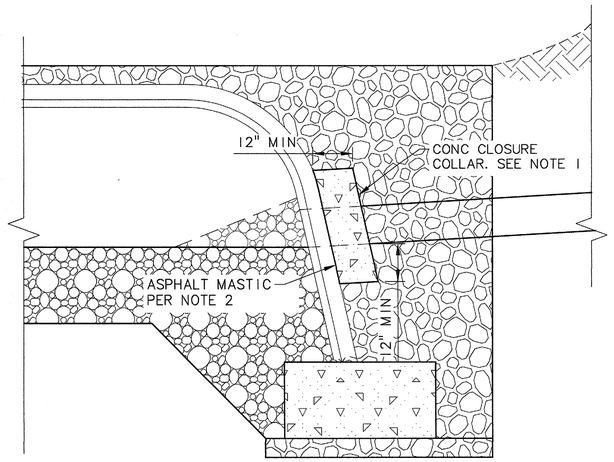

NOTES:

1. PROVIDE 1/3 CUBIC YARD OF CONCRETE AT 12-INCHES MINIMUM THK SURROUNDING SD PENETRATION INTO CULVERT.

2. PROVIDE ASPHALT MASTIC BETWEEN CONC AND ALUMINUM CULVERT.

CONCRETE CLOSURE COLLAR (2 / C-9)

SCALE: NTS

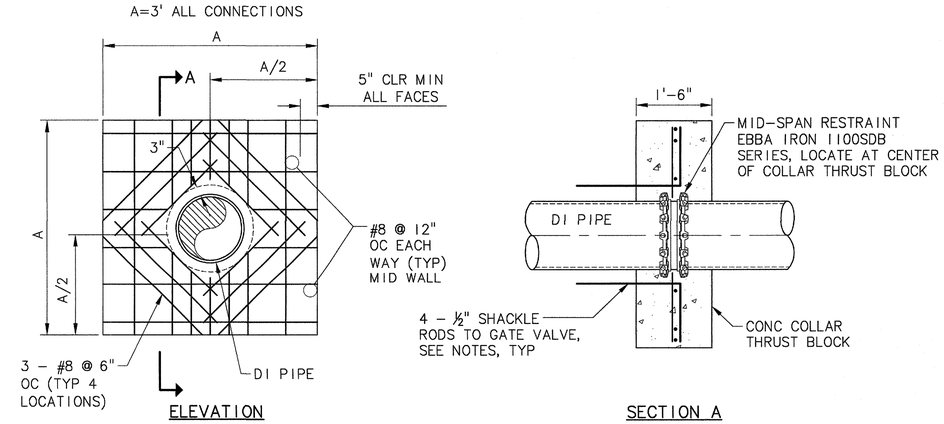

NOTES:

1. THRUST BLOCK TO BE POURED AGAINST UNDISTURBED EARTH (ALL SIDES); IF NOT POSSIBLE, THE SOIL BETWEEN THE BEARING SURFACE AND UNDISTURBED EARTH SHALL BE COMPACTED TO 95% MODIFIED PROCTOR.

2. REBAR TO BE ASTM A615, GR 60.

3. CONCRETE SHALL BE HIGH EARLY STRENGTH CONCRETE AND SHALL ATTAIN A MINIMUM COMPRESSIVE STRENGTH OF 3000 PSI IN 24 HOURS.

4. SHACKLE RODS SHALL BE 1/2-INCH DIAMETER COR-TEN ASTM A242, 4 EQUALLY SPACED PER BLOCK, COATED WITH 2 COATS OF COAL TAR EPOXY.

5. ATTACH SHACKLE RODS TO FITTINGS WITH TIE BOLTS, EQUAL TO STAR NATIONAL PRODUCTS.

6. COLLAR THRUST BLOCKS ARE INCIDENTAL TO WATER PIPE CONSTRUCTION.

COLLAR THRUST BLOCK (3 / C-9)

SCALE: NTS

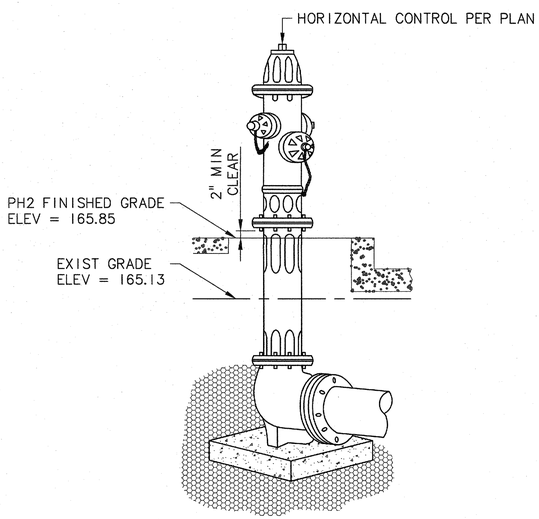

NOTES:

1. FURNISH & INSTALL FIRE HYDRANT ASSEMBLY PER CITY OF NEWBERG STD DWG NO. 312. SEE SPECIFICATIONS FOR INCIDENTAL ITEMS TO FIRE HYDRANT ASSEMBLY (GATE VALVE, VALVE BOX, ETC).

2. FURNISH & INSTALL 6" HYDRANT BLOW-OFF FITTING PER DETAIL 1, THIS SHEET.

FIRE HYDRANT ASSEMBLY (4 / C-9)

SCALE: NTS

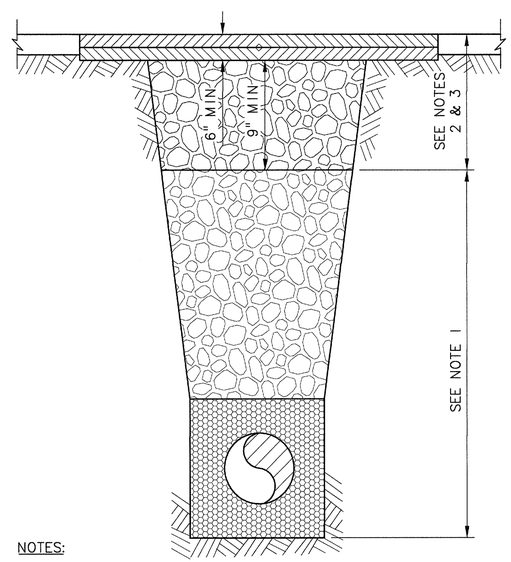

NOTES:

1. PIPE BEDDING AND BACKFILL PER OSD NO. RD300.

2. ACP TRENCH RESURFACING PER OSD NO. RD302. PLACE ACP IN TWO EQUAL LIFTS.

3. PROVIDE 9" MIN THK 3/4"-0 AGGREGATE BASE. AGGREGATE BASE IS INCIDENTAL TO TRENCH RESURFACING.

ACP TRENCH RESURFACING (5 / C-9)

SCALE: NTS

BID SET

MSA Murray, Smith & Associates, Inc.
Engineers/Planners
121 S.W. Salmon, Suite 900 Portland, Oregon 97204
PHONE 503-225-9010 FAX 503-225-9022

City of Newberg

VILLA ROAD IMPROVEMENTS, HAWORTH TO CRESTVIEW - PH. 1 - CULVERT REPLACEMENTS

PROJECT NO. 702163 - CITY OF NEWBERG, OREGON

DETAILS

REGISTERED PROFESSIONAL ENGINEER 727 OREGON NICHOLAS J. MCKNIGHT RENEWS 12-31-16 3/16/16

NO.	REVISION	DATE

SCALE: AS SHOWN
DATE: March 17, 2016
REVIEWED: NJM
DESIGNED: SBB
APPROVED: GEC
PLOT DATE: March 17, 2016
FILE:

SHEET

C-11

G:\PDX_PROJECTS\15\1699 - NEWBERG VILLA RD IMPROVEMENTS\CAD\SHEETS\15-1699-OR-PH1-C-DET.DWG

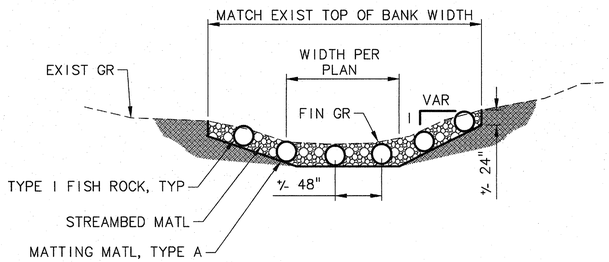

NOTE:

1. FINAL PLACEMENT AND ELEVATIONS OF FISH ROCKS TO BE DETERMINED BY CITY REPRESENTATIVE IN THE FIELD.

2. ROCK BAND IS INCIDENTAL TO STREAM ENHANCEMENT.

ROCK BAND (1 / C-6)
SCALE: NTS

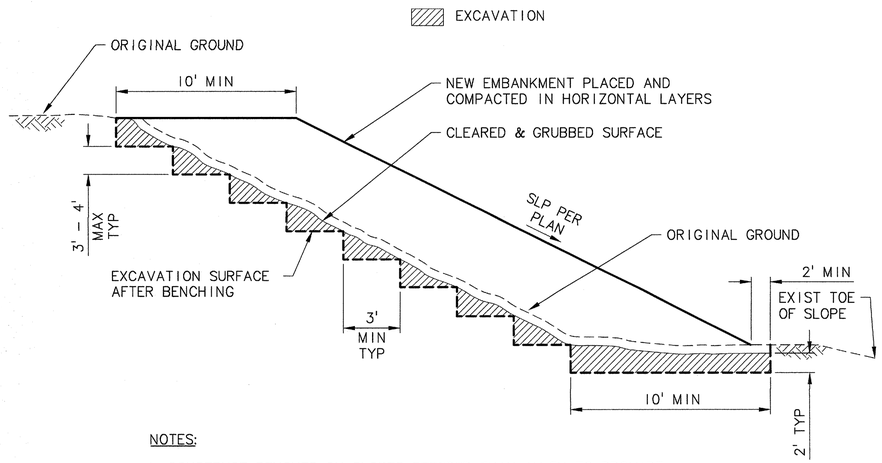

NOTES:

1. CONSTRUCT BENCHES ON SLOPES STEEPER THAN 1V:5H TO PROVIDE POSITIVE BOND WITH EXISTING GROUND.

2. BENCHING WORK IS INCIDENTAL TO EMBANKMENT CONSTRUCTION.

3. FOR EMBANKMENTS WHICH TOE OUT GREATER THAN 5' ABOVE THE EXISTING TOE OF SLOPE, SEE SLIVER FILL BENCHING DETAIL, THIS SHEET.

STANDARD EMBANKMENT CONSTRUCTION (2 / –)
SCALE: NTS

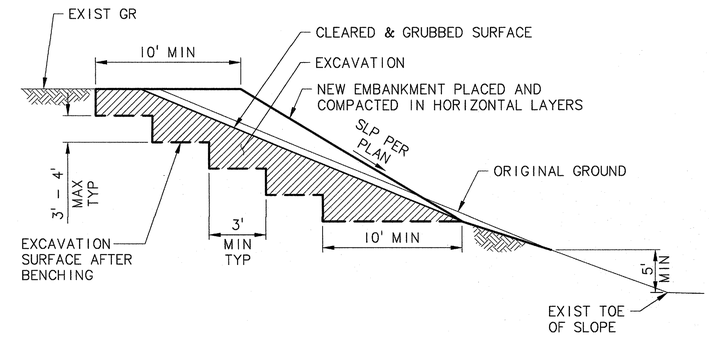

NOTES:

1. CONSTRUCT BENCHES ON SLOPES STEEPER THAN 1V:5H TO PROVIDE POSITIVE BOND WITH EXISTING GROUND.

2. BENCHING WORK IS INCIDENTAL TO EMBANKMENT CONSTRUCTION.

3. FOR EMBANKMENTS WHICH TOE OUT AT A HEIGHT OF 5' OR LESS ABOVE THE EXISTING TOE OF SLOPE, SEE STANDARD EMBANKMENT DETAIL, THIS SHEET.

SLIVER FILL BENCHING (3 / –)
SCCALE: NTS

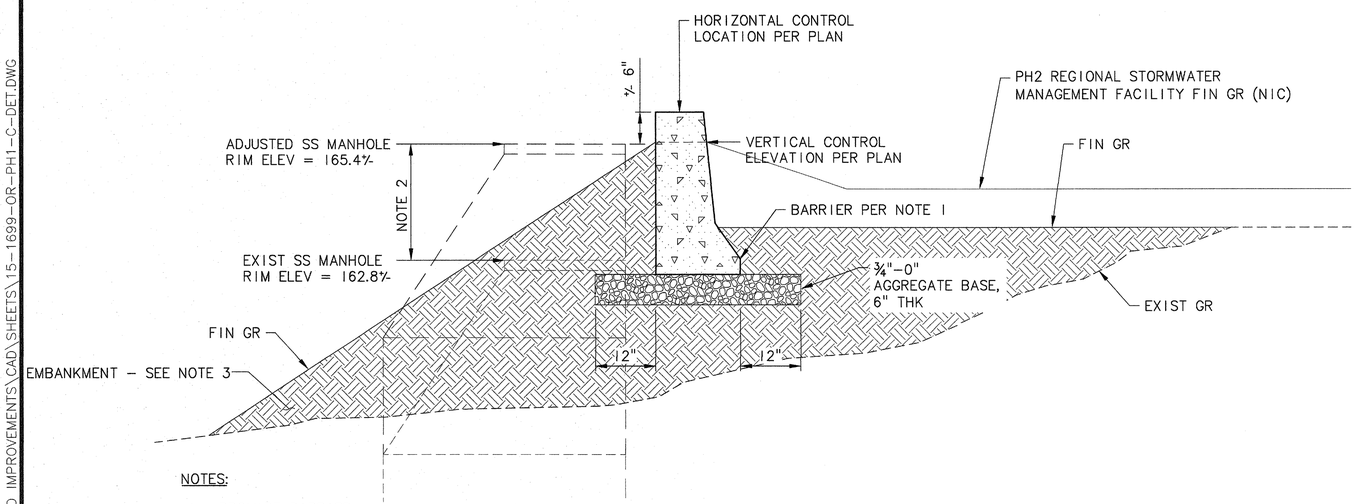

NOTES:

1. PROVIDE BARRIER:

   1.1 SALVAGE AND MOVE APPROXIMATELY 40 LF OF EXISTING BARRIER AT HESS CREEK TO LOCATION INDICATED ON PLAN.

   1.2 EXISTING BARRIER INCLUDES TWO SLOPED END SECTIONS. PLACE EXISTING END SECTIONS AT EACH END OF NEW BARRIER LOCATION.

   1.3 PROVIDE NEW BARRIER MATCHING EXISTING BARRIER TYPE FOR REMAINDER OF LENGTH INDICATED ON PLAN.

2. CONSTRUCT MAJOR ADJUSTMENT OF EXISTING SS MANHOLE.

3. CONSTRUCT STANDARD EMBANKMENT PER DETAIL, THIS SHEET.

BARRIER DETAIL (4 / C-3)
SCALE: NTS

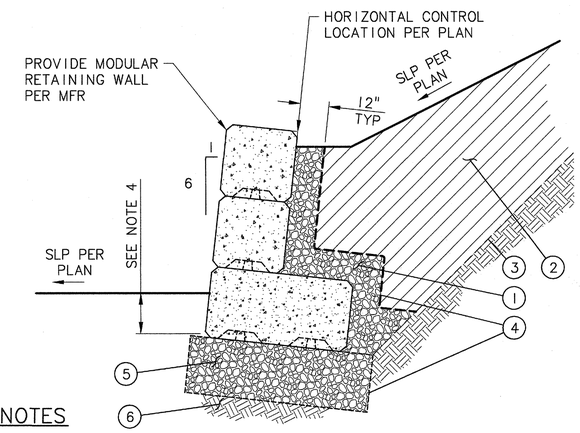

KEY NOTES

1. PIPE DRAIN BACKFILL
2. GRANULAR STRUCTURE BACKFILL
3. STABLE, TEMP 1:1 CUT SLOPE WHERE REQUIRED
4. GEOTEXTILE
5. GRAVEL OR CAST-IN-PLACE CONC LEVELING PAD
6. COMPACTED SUBGRADE SOILS AS APPVD BY ENGINEER

NOTES:

1. PREFABRICATED MODULAR RETAINING WALLS SHALL BE GRAVITY WALLS. USE OF MECHANICALLY STABILIZED EARTH (MSE) WALLS OR TIE-BACKS WILL NOT BE ALLOWED.

2. PREFABRICATED MODULAR RETAINING WALLS SHALL BE DESIGNED TO ACCOMMODATE FUTURE PHASE 2 EARTHWORK LOADING, INCLUDING FREE STANDING CONDITIONS FOLLOWING PHASE 1.

3. PROVIDE PERF DRAIN PIPE (NOT SHOWN) PER WALL MFR'S REQUIREMENTS.

4. CONSTRUCT FOOTING BURY DEPTH PER MFR REQUIREMENTS.

PREFABRICATED MODULAR RETAINING WALL DETAIL (5 / C-4)
SCALE: NTS

BID SET

MSA Murray, Smith & Associates, Inc. Engineers/Planners
121 S.W. Salmon, Suite 900 Portland, Oregon 97204
PHONE 503-225-9010 FAX 503-225-9022

City of Newberg

VILLA ROAD IMPROVEMENTS, HAWORTH TO CRESTVIEW - PH. 1 - CULVERT REPLACEMENTS
PROJECT NO. 702163 - CITY OF NEWBERG, OREGON

DETAILS

REGISTERED PROFESSIONAL ENGINEER 72710DE OREGON JUNE 9, 1987 NICHOLAS J. MOMMENSEN
RENEWS 12-31-16

NO.	REVISION	DATE

SCALE: AS SHOWN
DATE: March 17, 2016
REVIEWED: NJM
DESIGNED: SBB
APPROVED: GEC
PLOT DATE: March 17, 2016
FILE:

SHEET
C-12
15 of 18

G:\PDX_PROJECTS\15\1699 – NEWBERG VILLA RD IMPROVEMENTS\CAD\SHEETS\15-1699-OR-PH1-C-DET.DWG

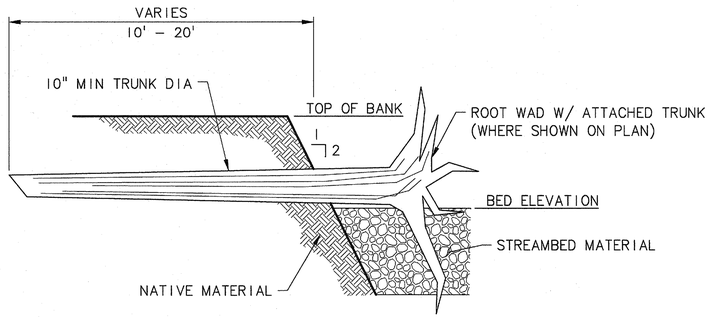

SECTION

NOTE:

1. FINAL PLACEMENT FISH LOG TO BE DETERMINED BY CITY REPRESENTATIVE IN THE FIELD.

2. FISH LOG IS INCIDENTAL TO STREAM ENHANCEMENT.

FISH LOG IN NATIVE BANK (1 / C-6)

SCALE: NTS

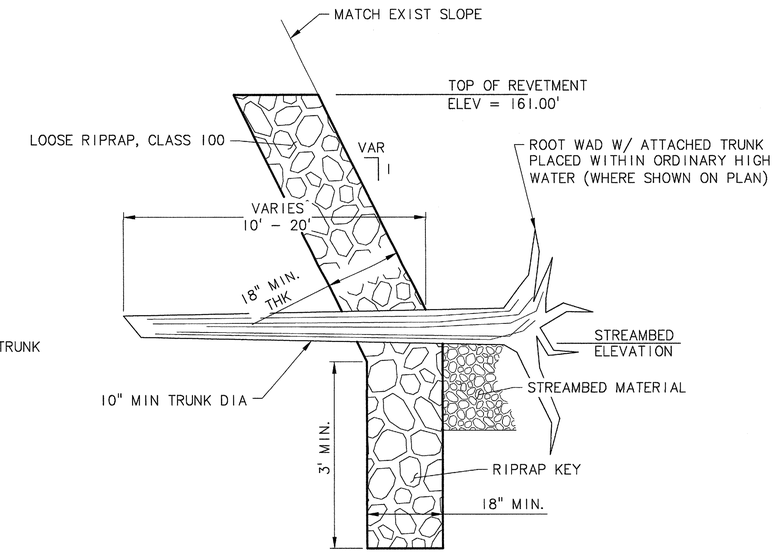

SECTION

NOTE:

1. FINAL PLACEMENT FISH LOG TO BE DETERMINED BY CITY REPRESENTATIVE IN THE FIELD.

2. FISH LOG IS INCIDENTAL TO STREAM ENHANCEMENT.

FISH LOG IN RIPRAP (2 / C-6)

SCALE: NTS

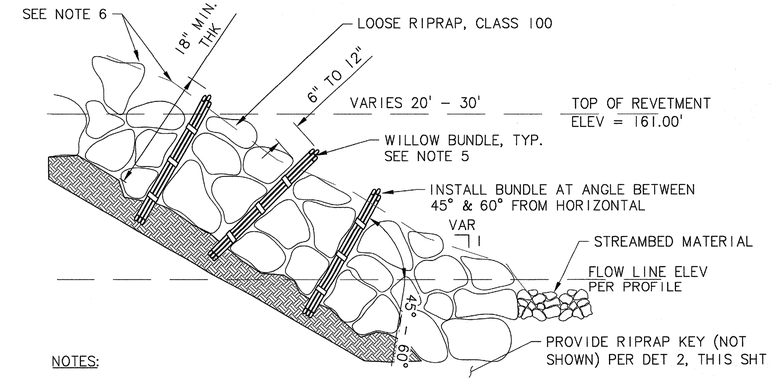

NOTES:

1. WILLOW BUNDLES SHALL BE INSTALLED AT TIME OF RIPRAP CONSTRUCTION.

2. SPACING SHALL BE APPROXIMATELY 36" ON CENTER AS RIPRAP ALLOWS. ADJUST SPACING AS NECESSARY TO ACCOUNT FOR WOODY DEBRIS.

3. APPROXIMATELY 80% OF BUNDLE LENGTH TO BE BELOW SURFACE OF RIPRAP.

4. BURIED ENDS OF BUNDLES SHOULD BE IN CONTACT WITH NATIVE SOIL, STANDING WATER OR MOIST ZONE NEAR BOTTOM OF RIPRAP REVETMENT EXCAVATION.

5. PROVIDE 3 TO 5 STAKE CUTTINGS PER BUNDLE, SECURED W/ BIODEGRADABLE COIR TWINE AT 3 POINTS, AS SHOWN, INSERT W/ BUDS POINTING UP. PROVIDE STAKE CUTTINGS PER DET 4, THIS SHT.

6. FINISH GRADE OF RIPRAP SHALL GENERALLY MATCH EXISTING GRADE AND SLOPE OUTSIDE OF FINISH GRADE CONTOURS. EXCAVATE BELOW EXISTING GRADE 18" MIN. AND BACKFILL WITH RIPRAP. EXCAVATION IS INCIDENTAL TO RIPRAP.

WILLOW BUNDLES IN RIPRAP (3 / C-6)

SCALE: NTS

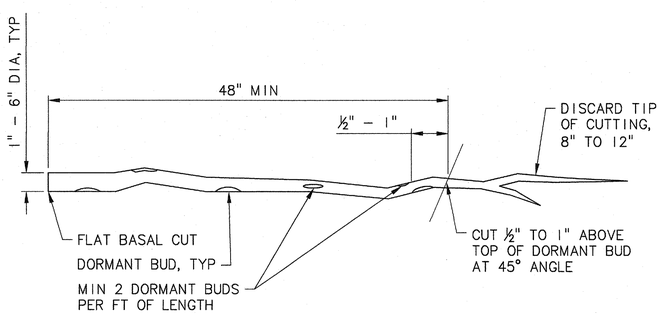

NOTES:

1. HARVEST AREA TO BE WITHIN SAME ECO-REGION AS PROJECT AREA.

2. CUT FROM VIGOROUS 1 – 3 YEAR OLD WOOD ON PLANTS GROWING IN FULL SUNLIGHT.

3. IMMEDIATELY REMOVE ALL LATERAL BRANCHES AND CUT LEADER (APICAL STEM) APPROXIMATELY 8" – 12" DOWN STEM FROM TIP LEADER.

4. STORE PROTECTED AT 32° – 42° FAHRENHEIT FOR UP TO 4 MONTHS, OR BEFORE DORMANT BUD DEVELOPMENT.

STAKE CUTTING (4 / –)

SCALE: NTS

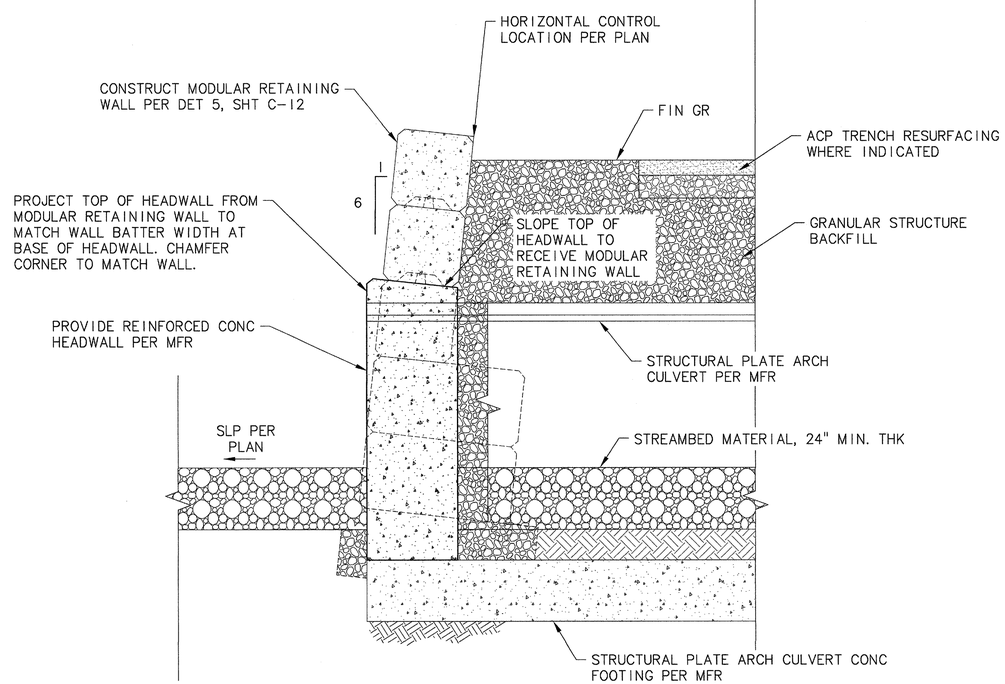

CONCRETE HEADWALL DETAIL (5 / C-4)

SCALE: NTS

BID SET

Murray, Smith & Associates, Inc.
Engineers/Planners
121 S.W. Salmon, Suite 900
Portland, Oregon 97204
PHONE 503-225-9010
FAX 503-225-9022

City of Newberg

VILLA ROAD IMPROVEMENTS, HAWORTH TO CRESTVIEW - PH. 1 - CULVERT REPLACEMENTS

PROJECT NO. 702163 - CITY OF NEWBERG, OREGON

DETAILS

REGISTERED PROFESSIONAL ENGINEER — OREGON — NICHOLAS J. MONTGOMERY — RENEWS 12-31-16

NO.	REVISION	DATE

SCALE: AS SHOWN
DATE: March 17, 2016
REVIEWED: NJM
DESIGNED: SBB
APPROVED: GEC
PLOT DATE: March 17, 2016
FILE:

SHEET C-13

G:\PDX_PROJECTS\15\1699 – NEWBERG VILLA RD IMPROVEMENTS\CAD\SHEETS\15-1699-OR-PH1-C-DET.DWG

CONSTRUCTION NOTES

1. INSTALL TYPE 1 CONSTRUCTION ENTRANCE PER OSD RD1000
2. INSTALL TYPE 2 OR 6 CHECK DAM PER OSD RD1006
3. INSTALL TYPE 3 INLET PROTECTION PER OSD RD1010
4. INSTALL TYPE 4 INLET PROTECTION PER OSD RD1015
5. INSTALL TYPE 8 SEDIMENT BARRIER PER OSD RD1032
6. INSTALL SLOPE AND CHANNEL MATTING PER OSD RD1055
7. INSTALL CONCRETE TRUCK WASH OUT PER OSD RD1070
8. REMOVE EXISTING TREE (6)
9. SALVAGE EXISTING TREE AND ROOT WAD FOR FISH LOG
10. INSTALL TEMP ENERGY DISSIPATER PER OSD RD1050

NOTES:

1. CONSTRUCTION ENTRANCES SHALL BE INSTALLED AT THE BEGINNING OF CONSTRUCTION AND MAINTAINED FOR THE DURATION OF THE PROJECT. ADDITIONAL MEASURES INCLUDING, BUT NOT LIMITED TO, STREET SWEEPING, AND VACUUMING, MAY BE REQUIRED TO ENSURE THAT ALL PAVED AREAS ARE KEPT CLEAN FOR THE DURATION OF THE PROJECT.

2. CONSTRUCTION ENTRANCES AND CONCRETE TRUCK WASH OUT LOCATIONS SHOWN ARE FOR BIDDING PURPOSES ONLY. CONTRACTOR SHALL LOCATE THESE BEST MANAGEMENT PRACTICES AS NEEDED TO FACILITATE CONSTRUCTION STAGING AND SEQUENCING.

3. SENSITIVE RESOURCES INCLUDING, BUT NOT LIMITED TO, TREES, WETLANDS, AND RIPARIAN PROTECTION AREAS SHALL BE CLEARLY DELINEATED WITH ORANGE CONSTRUCTION FENCING OR CHAIN LINK FENCING IN A MANNER THAT IS CLEARLY VISIBLE TO ANYONE IN THE AREA. NO ACTIVITIES ARE PERMITTED TO OCCUR BEYOND THE PROTECTION AREAS.

4. RUN-ON AND RUN-OFF CONTROLS SHALL BE IN PLACE AND FUNCTIONING PRIOR TO BEGINNING SUBSTANTIAL CONSTRUCTION ACTIVITIES. RUN-ON AND RUN-OFF CONTROL MEASURES INCLUDE: SLOPE DRAINS (WITH OUTLET PROTECTION), CHECK DAMS, SURFACE ROUGHENING, AND BANK STABILIZATION.

5. STAGING AREAS FOR ALL PROJECT EQUIPMENT AND MATERIALS, INCLUSIVE OF HAZARDOUS MATERIALS, SHALL BE ESTABLISHED AT LEAST 150 FEET FROM THE CREEKS OR AN ESTABLISHED PAVED AREA. ALL STAGING, STORAGE, OR STOCKPILE AREAS SHALL BE COMPLETELY OBLITERATED AFTER CONSTRUCTION. THESE AREAS SHALL BE STABILIZED AND REVEGETATED IF THEY ARE NOT ESTABLISHED WITHIN EXISTING PAVED AREAS.

6. CONTRACTOR SHALL DEVELOP AND SUBMIT A POLLUTION CONTROL PLAN (PCP) TO THE CITY FOR APPROVAL 10 DAYS BEFORE THE PRECONSTRUCTION CONFERENCE. THE PCP SHALL COMPLY WITH DEQ REQUIREMENTS. A SPILL CONTAINMENT KIT AND THE PCP SHALL REMAIN ON-SITE AT ALL TIMES DURING CONSTRUCTION.

7. EXISTING TREES NOT SPECIFICALLY CALLED OUT TO BE REMOVED SHALL BE PRESERVED AND PROTECTED BY THE CONTRACTOR.

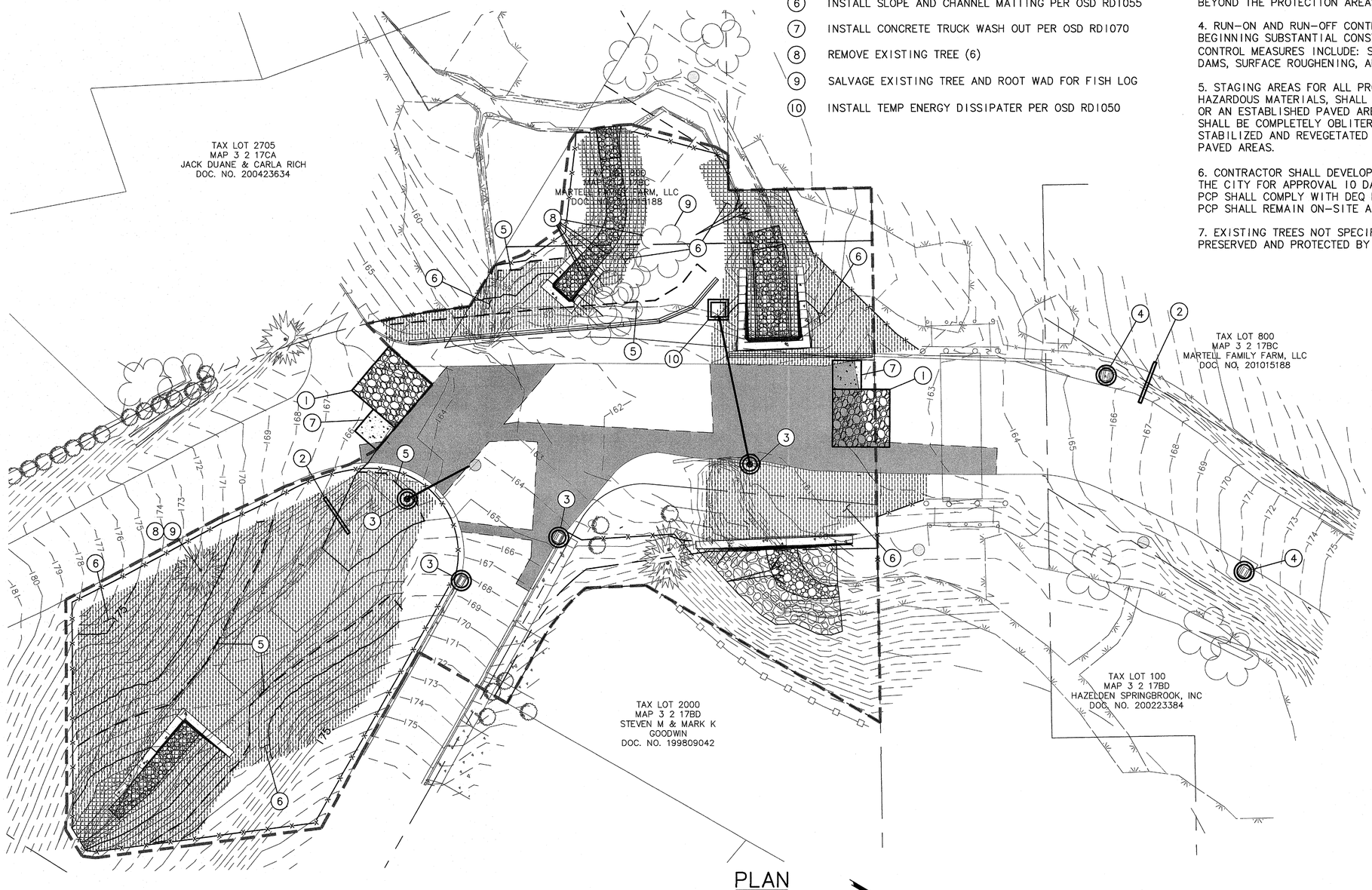

PLAN

SCALE: 1"=20'

20 10 0 20 40

SCALE IN FEET

SHEET LEGEND

- WEED CONTROL LIMITS
- HIGH VISIBILITY ORANGE FENCE
- EXISTING CONTOURS (1')
- EXISTING CONTOURS (5') — 180
- PROPOSED CONTOURS (1')
- PROPOSED CONTOURS (5') — 180
- AC PAVEMENT SURFACE RESTORATION
- LIMITS OF EMBANKMENT — F
- LIMITS OF EXCAVATION — C
- SEDIMENT BARRIER
- CHANNEL/SLOPE MATTING W/ SEED MIX NO. 1
- CHANNEL/SLOPE MATTING W/ SEED MIX NO. 2
- CONSTRUCTION ENTRANCE
- CONCRETE TRUCK WASH OUT
- CHECK DAM
- INLET PROTECTION

BID SET

MSA Murray, Smith & Associates, Inc. Engineers/Planners
121 S.W. Salmon, Suite 900 Portland, Oregon 97204
PHONE 503-225-9010 FAX 503-225-9022

City of Newberg

VILLA ROAD IMPROVEMENTS, HAWORTH TO CRESTVIEW - PH. 1 - CULVERT REPLACEMENTS

PROJECT NO. 702163 - CITY OF NEWBERG, OREGON

EROSION CONTROL PLAN

REGISTERED PROFESSIONAL ENGINEER — OREGON — NICHOLAS J. McMONAGLE — RENEWS 12-31-16 — 2/18/16

NO.	REVISION	DATE

SCALE: AS SHOWN
DATE: March 17, 2016
REVIEWED: NJM
DESIGNED: SBB
APPROVED: GEC
PLOT DATE: March 18, 2016
FILE:

SHEET

ESC-1

G:\PDX_PROJECTS\15\1699 - NEWBERG VILLA RD IMPROVEMENTS\CAD\SHEETS\15-1699-OR-PH1-ESC-PLANS.DWG

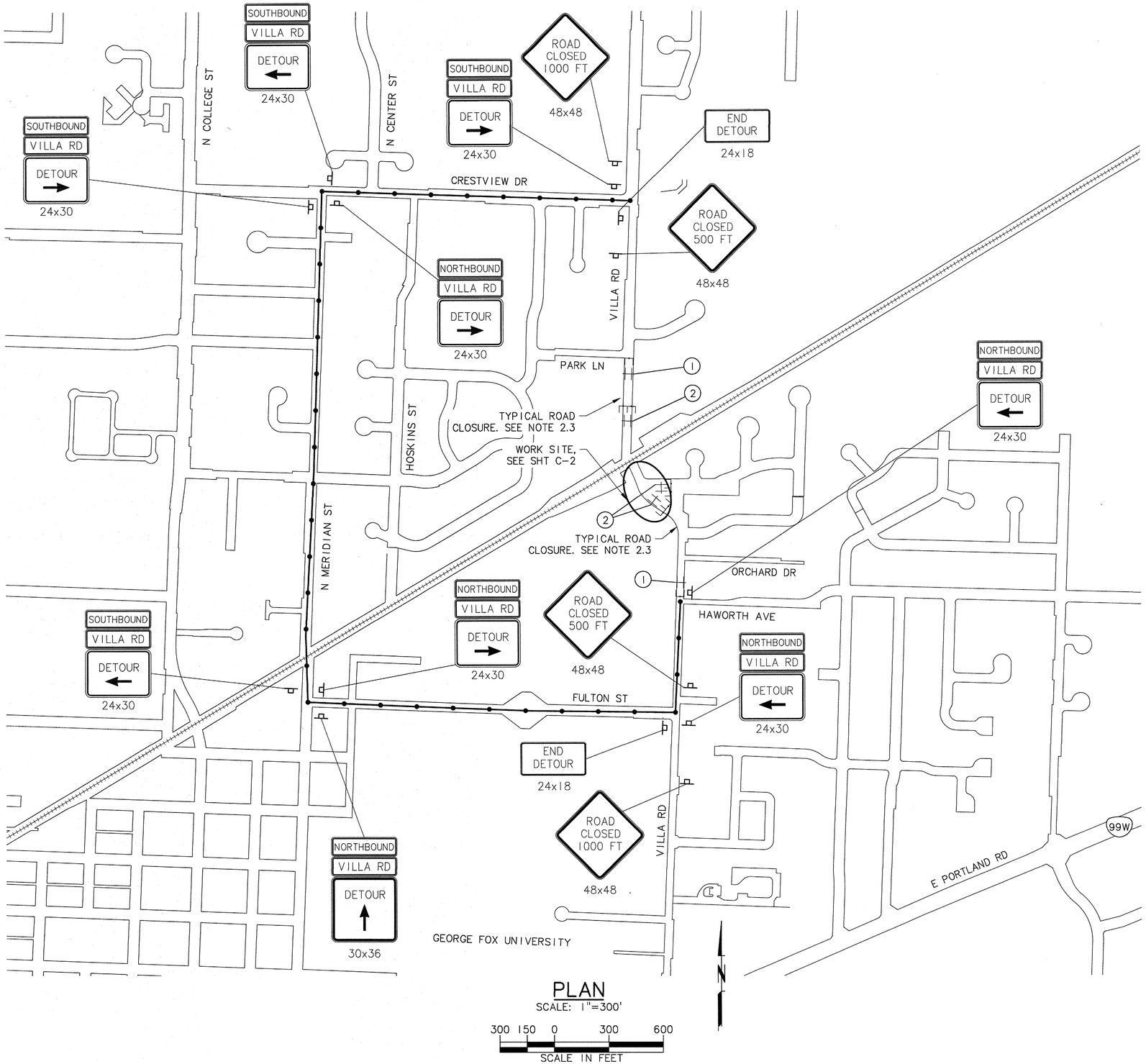

PLAN

SCALE: 1"=300'

NOTES:

1. TRAFFIC CONTROL SHALL BE PROVIDED BY THE CONTRACTOR THROUGHOUT CONSTRUCTION.
2. TRAFFIC CONTROL PLAN IS CONCEPTUAL AND FOR REFERENCE ONLY. CONTRACTOR SHALL PROVIDE A TRAFFIC CONTROL PLAN TO THE CITY OF NEWBERG FOR REVIEW AND APPROVAL PRIOR TO COMMENCING CONSTRUCTION.
3. TRAFFIC CONTROL PLANS SHALL BE ACCOMPANIED BY OREGON STANDARD DRAWINGS (OSD).
   - 3.1. BARRICADES SHALL BE PLACED ON ROADWAY PER OSD TM820.
   - 3.2. SIGNS SHALL BE INSTALLED PER OSD TM821.
   - 3.3. ROAD CLOSURES SHALL BE PROVIDED PER OSD TM840.
4. CONTRACTOR SHALL SUPPLY TWO PCMS FOR THE PROJECT AND PLACE AT LOCATIONS DIRECTED BY THE CITY OF NEWBERG. CONTRACTOR SHALL OPERATE AND MANAGE OPERATION OF PCMS FOR THE DURATION OF THE PROJECT.

LEGEND

- DETOUR ROUTE
- TYPE 3 BARRICADE
- TRAFFIC CONTROL SIGNAGE

KEYNOTES

1. ROAD CLOSED TO THRU TRAFFIC — 60x30
2. ROAD CLOSED — 48x30

BID SET

MSA Murray, Smith & Associates, Inc. Engineers/Planners
121 S.W. Salmon, Suite 900 Portland, Oregon 97204
PHONE 503-225-9010 FAX 503-225-9022

City of Newberg

VILLA ROAD IMPROVEMENTS, HAWORTH TO CRESTVIEW - PH. 1 - CULVERT REPLACEMENTS

PROJECT NO. 702163 - CITY OF NEWBERG, OREGON

DETOUR PLAN

REGISTERED PROFESSIONAL ENGINEER — OREGON — NICHOLAS J. McMURRAY — RENEWS 12-31-16

NO.	REVISION	DATE

SCALE: AS SHOWN
DATE: March 17, 2016
REVIEWED: NJM
DESIGNED: SBB
APPROVED: GEC
PLOT DATE: March 17, 2016
FILE:

SHEET

TC-1

G:\PDX_PROJECTS\15\1699 - NEWBERG VILLA RD IMPROVEMENTS\CAD\SHEETS\15-1699-OR-PH1-C-TC.DWG