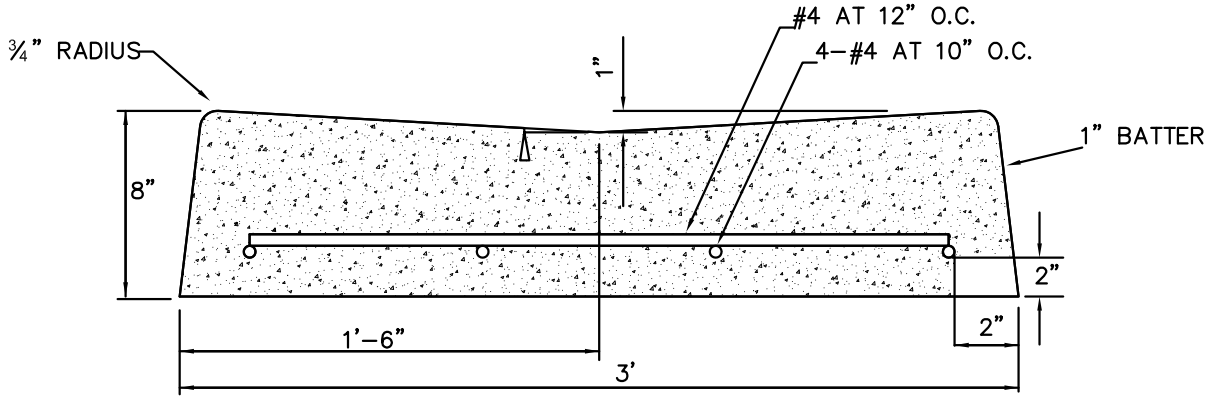

NOTES

1. CONCRETE MIX: 4,000 PSI AT 28 DAYS WITH 6% ENTRAINED AIR.

City of Newberg
PUBLIC WORKS ENGINEERING DIVISION
414 E. FIRST STREET NEWBERG, OR 97132
PHONE: 503-537-1240
FAX: 503-537-1277

REVISIONS:

VALLEY GUTTER

SCALE:	N.T.S
DATE:	May 2007
APPROVED BY:	D. Danicic
STANDARD DRAWING	528