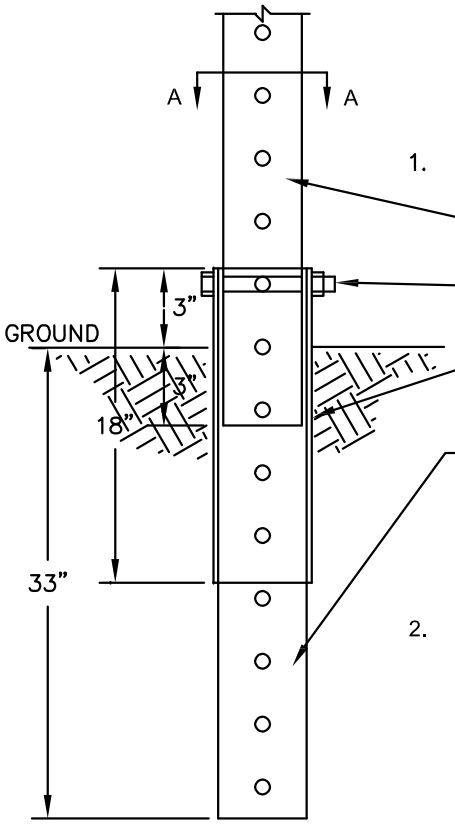


1. MATERIALS:

2" X 2" X 63", 12 GA. GALV. PERFORATED STEEL POST.

3/8" X 3 1/2", GALVANIZED HEX HEAD BOLT WITH LOCK WASHER.

2 1/2" X 2 1/2" X 18", 12 GA. GALV. PERFORATED STEEL STIFFNER POST.

2 1/4" X 2 1/4" X 30", 12 GA. GALV. PERFORATED STEEL ANCHOR.

7/16" X 5", GALVANIZED CARRIAGE WITH FLAT AND LOCK WASHER, 2 BOLTS PER RAIL PER POST.

2. BARRICADE FOR SIDEWALK IS SIMILAR.

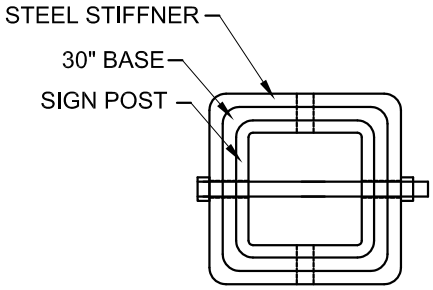


SECTION A - A

1. FOR APPLICATION OF BARRICADE ON EXISTING CONCRETE, USE TELSPAR STEEL BASE PLATE PER DETAIL ON STANDARD DRAWING #525B, STANDARD SIGNPOST CONCRETE APPLICATIONS DETAIL.

City of Newberg
PUBLIC WORKS ENGINEERING DIVISION
414 E. FIRST STREET NEWBERG, OR 97132
PHONE: 503-537-1240
FAX: 503-537-1277

REVISIONS:

STREET BARRICADE POST SUPPORT DETAIL

SCALE: N.T.S.
DATE: July 2009
APPROVED BY: P.Chiu
STANDARD DRAWING 516B