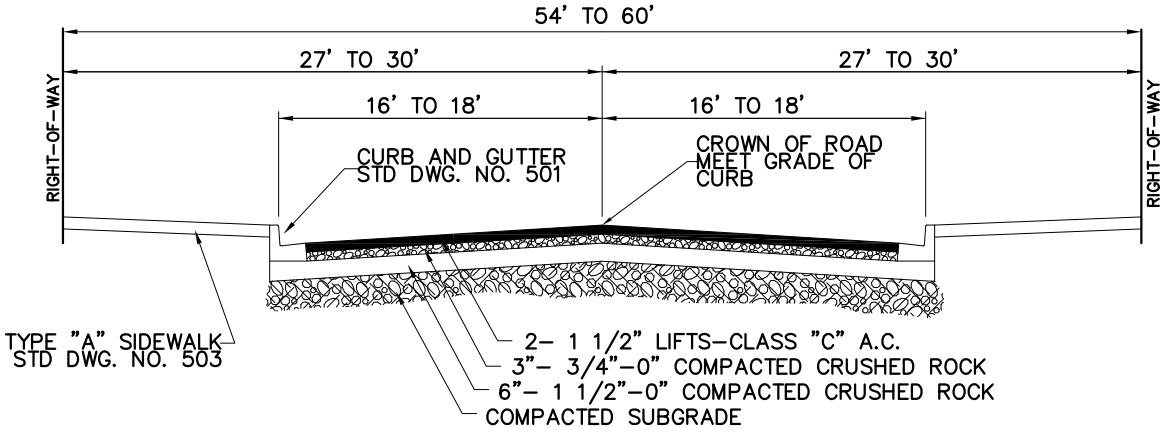

City of Newberg
PUBLIC WORKS ENGINEERING DIVISION
414 E. FIRST STREET NEWBERG, OR 97132
PHONE: 503-537-1240
FAX: 503-537-1277

REVISIONS:	RESIDENTIAL STREET CROSS SECTION	SCALE: N.T.S.
04/08/10		DATE: May 2007
		APPROVED BY: D. Danicic
		STANDARD DRAWING 513