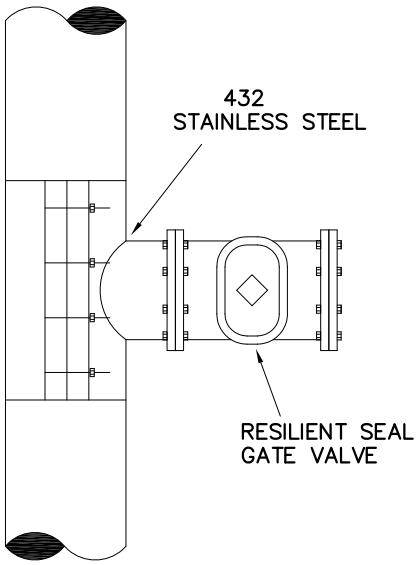

FULL STAINLESS STEEL TAPPING SLEEVE

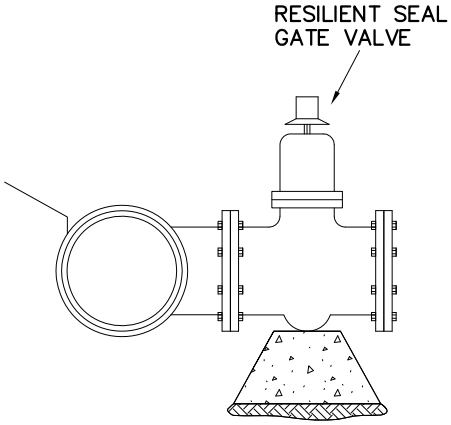

NOTES

1. WATER MAIN SHALL BE CLEANED BEFORE ATTACHING SLEEVE.
2. SLEEVE AND VALVE SHALL BE PRESSURE TESTED BEFORE MAKING TAP
3. PRESSURE TEST AND TAP SHALL BE MADE IN THE PRESENCE OF AN AUTHORIZED CITY REPRESENTATIVE BY A CONTRACTOR APPROVED BY THE ENGINEER.
4. 3/4"–0" CRUSHED ROCK SHALL BE PLACED AND COMPACTED TO 95% OF MAXIMUM DENSITY AS DETERMINED BY AASHTO T–180.
5. TAP SHALL BE MADE NO CLOSER THAN 18" FROM THE NEAREST JOINT.
6. SLEEVE AND VALVE SHALL BE WRAPPED AND SEALED WITH 8 MIL PLASTIC.
7. FLUSH ALL METAL SHAVINGS FROM THE TAPPING PROCESS.
8. STAINLESS STEEL TAPPING SLEEVE ON DUCTILE IRON PIPE
9. COUPON MUST BE RETAINED BY TAPPING BIT AND REMOVED FROM WATER MAIN.

City of Newberg
PUBLIC WORKS ENGINEERING DIVISION
414 E. FIRST STREET NEWBERG, OR 97132
PHONE: 503-537-1240
FAX: 503-537-1277

REVISIONS:

WATER TAPPING SLEEVES

SCALE:	N.T.S
DATE:	May 2007
APPROVED BY:	D. Danicic
STANDARD DRAWING	302