FOR USE IN PRIVATE AREAS ONLY

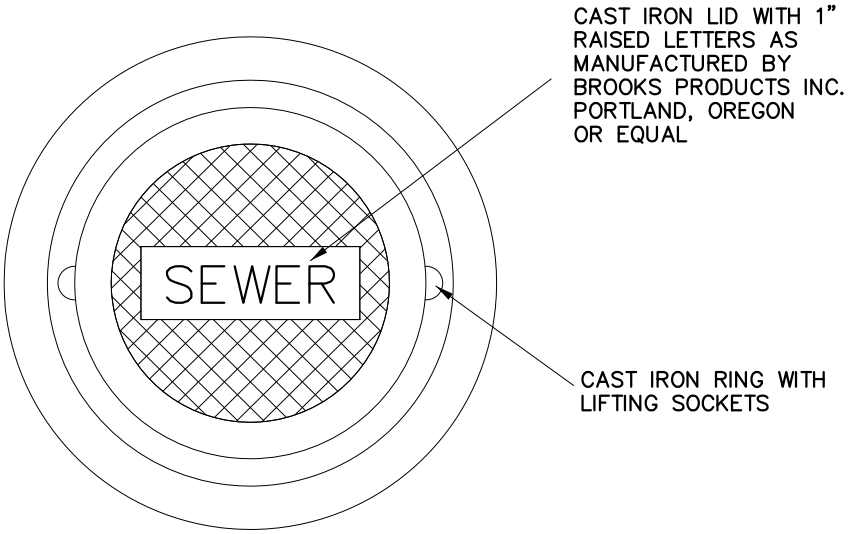


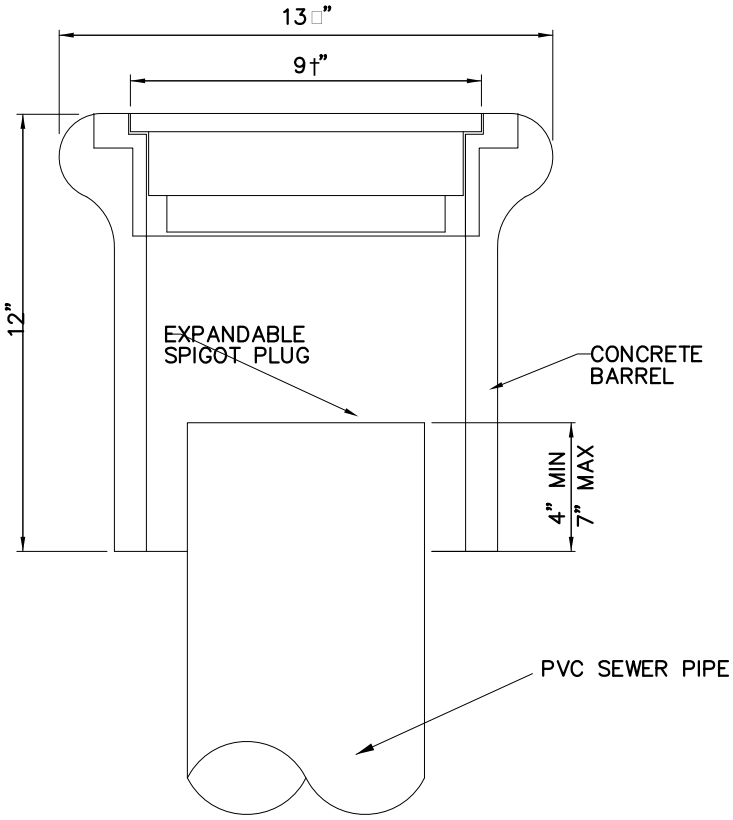


City of Newberg
PUBLIC WORKS ENGINEERING DIVISION
414 E. FIRST STREET NEWBERG, OR 97132
PHONE: 503-537-1240
FAX: 503-537-1277

REVISIONS:

TRAFFIC BOX
PRIVATE AREAS ONLY

| | |
|---|---|
| SCALE: | N.T.S |
| DATE: | May 2007 |
| APPROVED BY: | D. Danicic |
| STANDARD DRAWING | 213 |