NOTES

1. STANDARD MANHOLE TO BE USED FOR PIPES 18" AND LESS.
2. PRECAST CONCRETE STRUCTURES SHALL HAVE STRENGTH OF 4000 PSI.
3. LATERAL LINES TO MATCH TOP OF INLET PIPE AT MANHOLE.
4. ALL INTERIOR JOINTS AND CONNECTIONS SHALL BE WATER TIGHT, AND GROUTED WITH NON-SHRINK GROUT.
7. IF END OF LINE MANHOLE, STEPS SHALL BE LOCATED ON DOWNSTREAM SIDE AND CHANNEL SHALL BE CONSTRUCTED FULL WIDTH OF INTERIOR.

USE OF KEY-LOC TYPE MANHOLE SECTIONS REQUIRES SEALING OF EXTERIOR JOINTS WITH "RAPID SEAL" OR INTERIOR COATING WITH "RAVIN COATING"

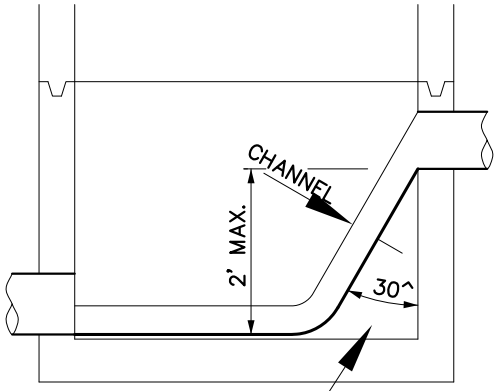

BEAVER SLIDE

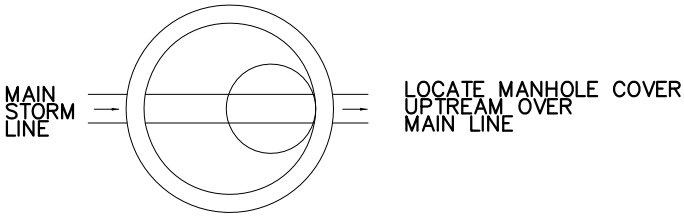

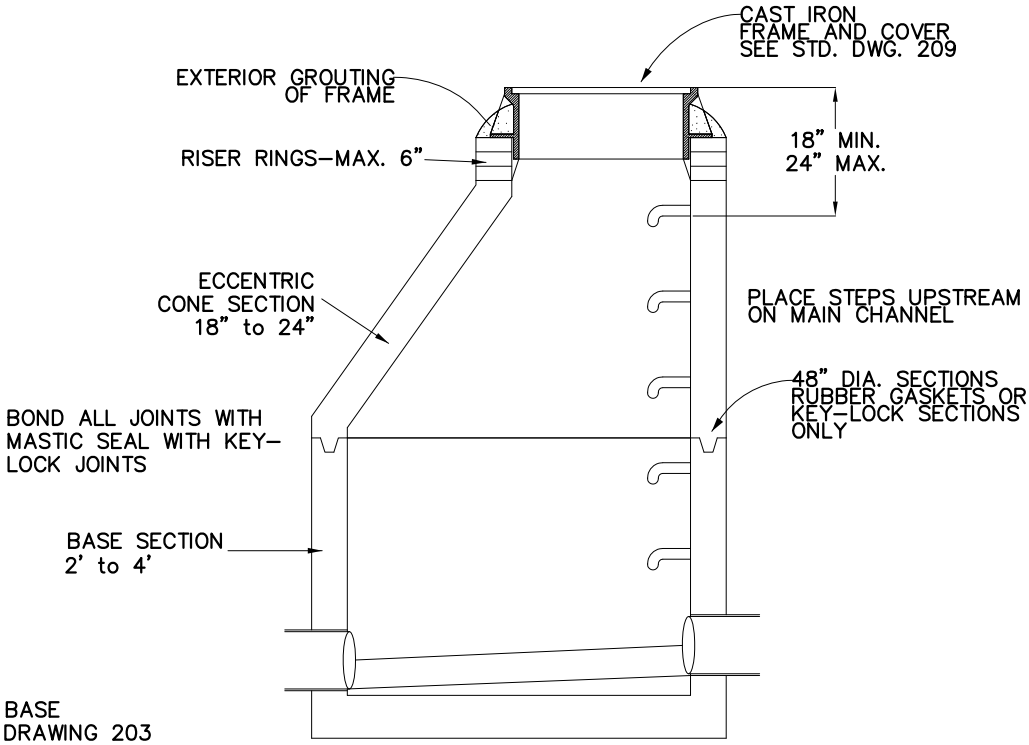

MANHOLE BASE
SEE STD. DRAWING 203

City of Newberg
PUBLIC WORKS ENGINEERING DIVISION
414 E. FIRST STREET NEWBERG, OR 97132
PHONE: 503-537-1240
FAX: 503-537-1277

REVISIONS:	SHALLOW MANHOLE	SCALE: N.T.S
12/28/07		DATE: May 2007
		APPROVED BY: D. Danicic
		STANDARD DRAWING 205