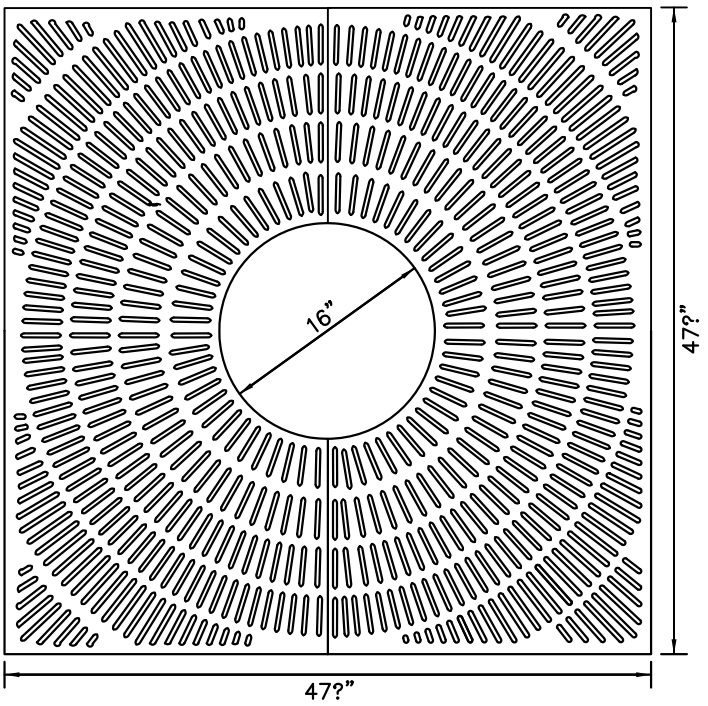

48" "STA" TREE GRATE:

- ADA APPROVED, TWO PEICE SET
- DUCTILE CAST IRON ASTM, A536, CL80–55–06
- APPROXIMATE WEIGHT 226 lbs. PER SET
- OLYMPIC FOUNDRY PART NO. 80–2190 (OR EQUIVALENT)

STYLE "CIP"
(NEW SUB–SLAB, SAND BED)

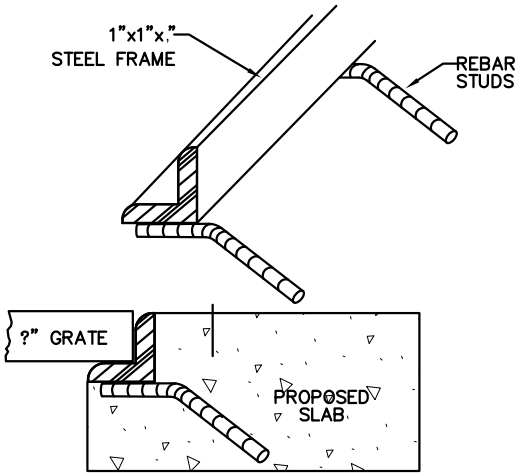

STYLE "RF"
(EXTG. SLAB)

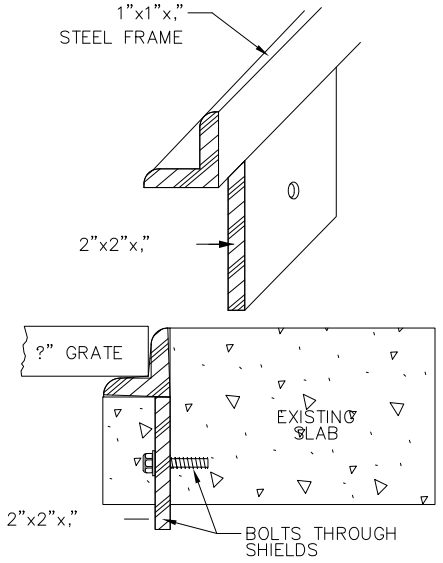

STYLE "AP"
(EXTG. SUB–SLAB, GROUT BED)

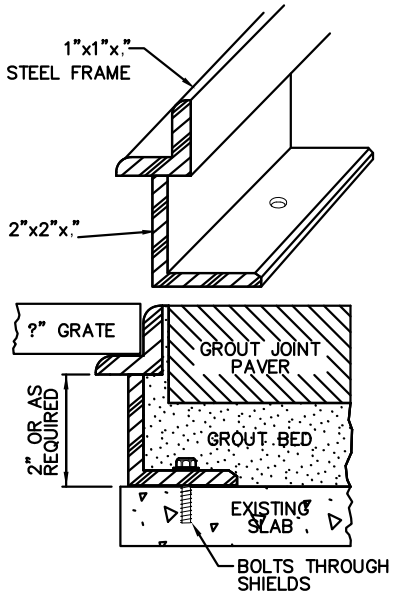

STYLE "CIP"
(NEW SUB–SLAB, SAND BED)

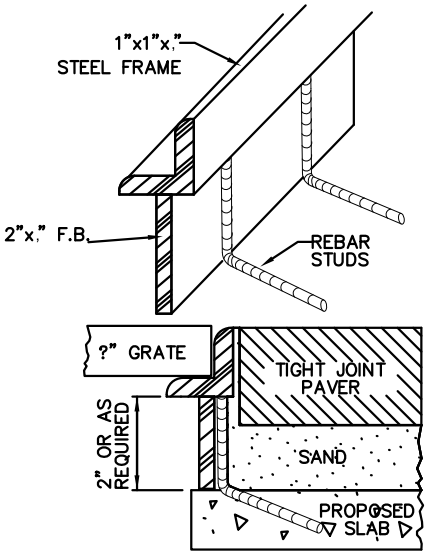

City of Newberg
PUBLIC WORKS ENGINEERING DIVISION
414 E. FIRST STREET NEWBERG, OR 97132
PHONE: 503–537–1240
FAX: 503–537–1277

REVISIONS:

TREE GRATE AND FRAME

SCALE:	N.T.S.
DATE:	July 2013
APPROVED BY:	D. Danicic
STANDARD DRAWING	107