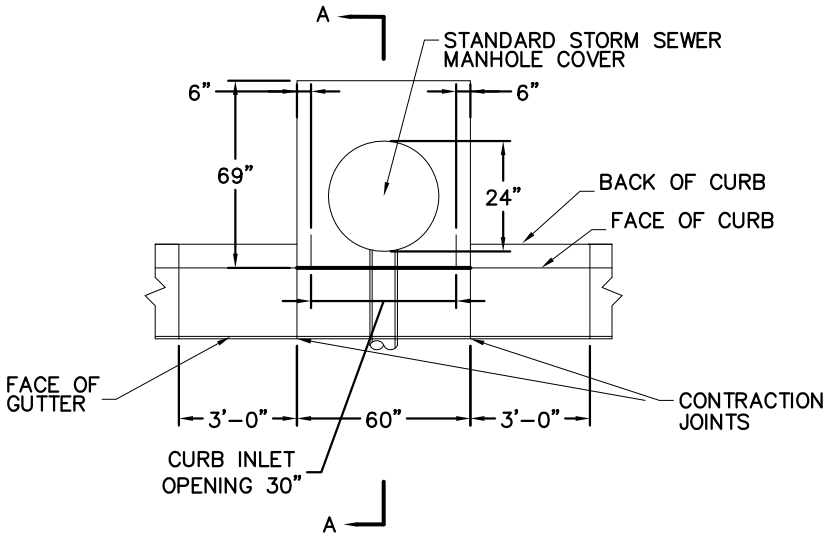

PLAN VIEW

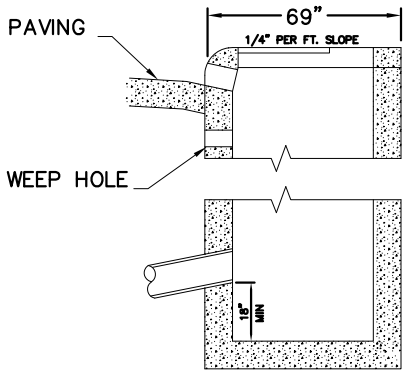

SECTION A–A

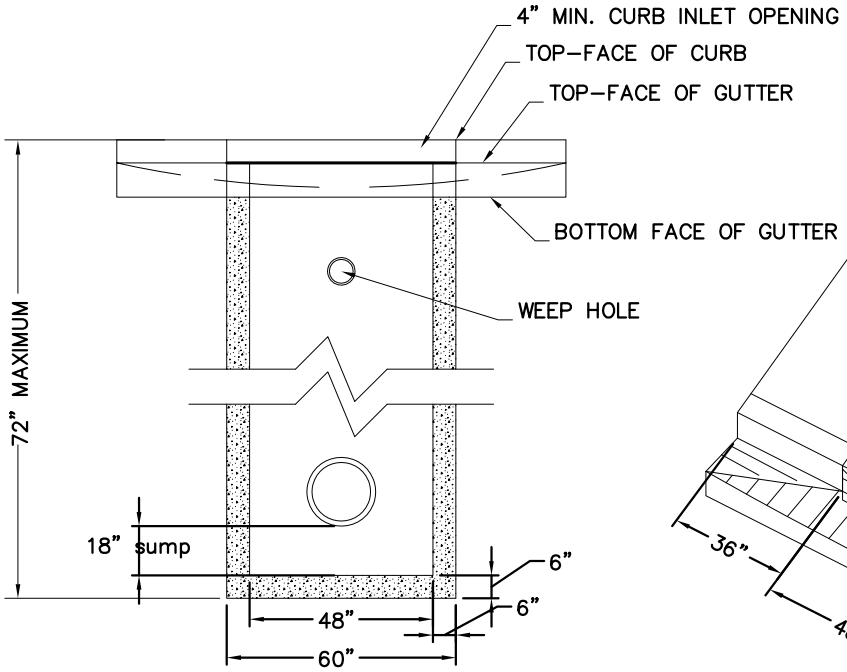

FRONT VIEW

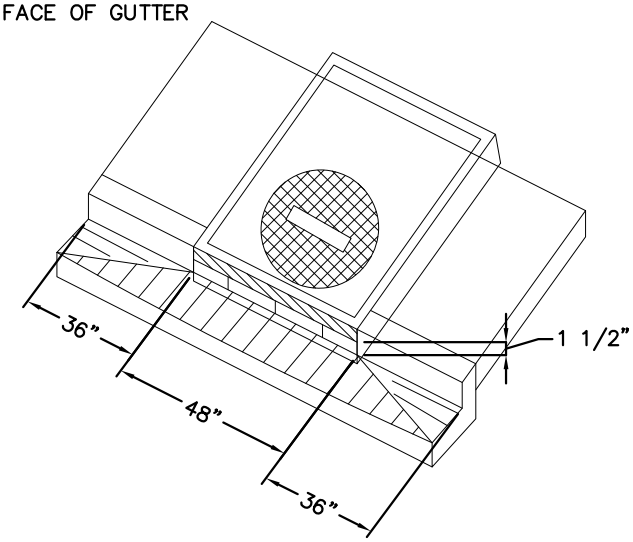

PERSPECTIVE VIEW SHOWING DEPRESSED GUTTER AT CURB INLET

4" WEEP HOLES REQUIRED AT SUBGRADE ON STREET AND UPHILL SIDES OF BASIN

City of Newberg
PUBLIC WORKS ENGINEERING DIVISION
414 E. FIRST STREET NEWBERG, OR 97132
PHONE: 503-537-1240
FAX: 503-537-1277

REVISIONS:	SUPER SIZED PELICAN CATCH BASIN	SCALE: N.T.S
12/02/10		DATE: July 2009
		APPROVED BY: D. Danicic
		STANDARD DRAWING 410