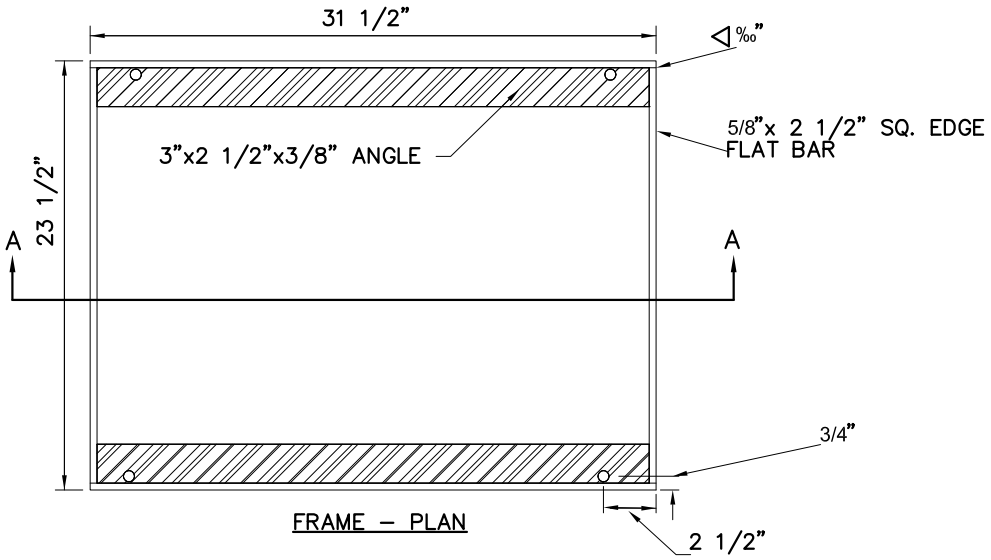

FRAME – PLAN

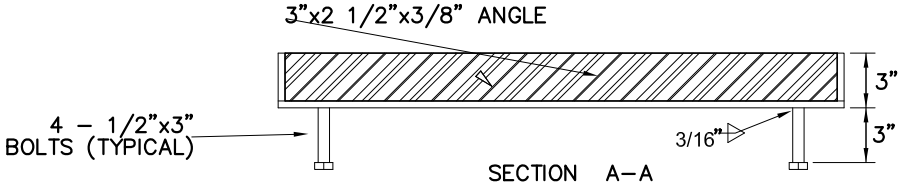

SECTION A–A

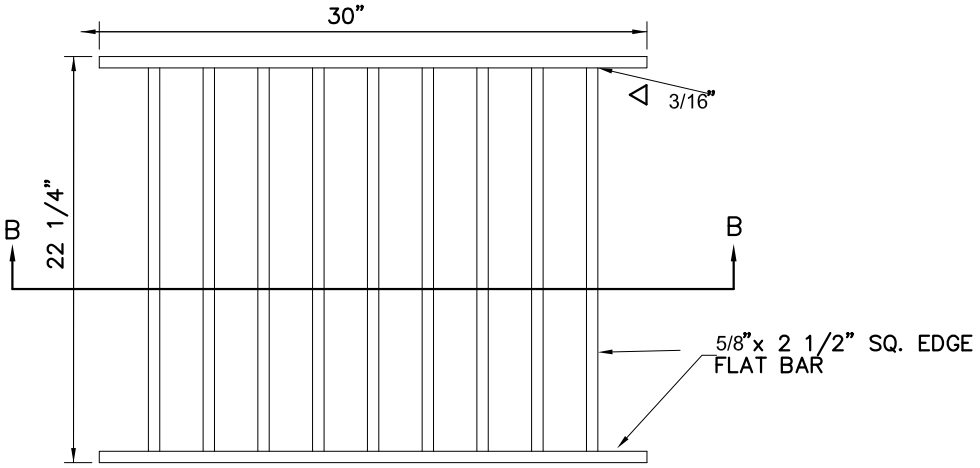

GRATE – PLAN

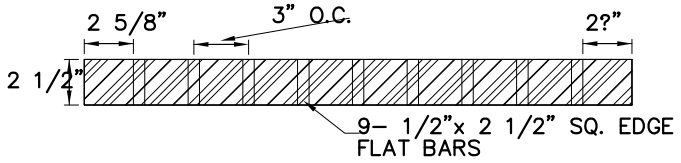

SECTION B–B

City of Newberg
PUBLIC WORKS ENGINEERING DIVISION
414 E. FIRST STREET NEWBERG, OR 97132
PHONE: 503-537-1240
FAX: 503-537-1277

REVISIONS:

DITCH INTERCEPTOR FRAME AND GRATE TYPE A

SCALE:	N.T.S
DATE:	May 2007
APPROVED BY:	D. Danicic
STANDARD DRAWING	404