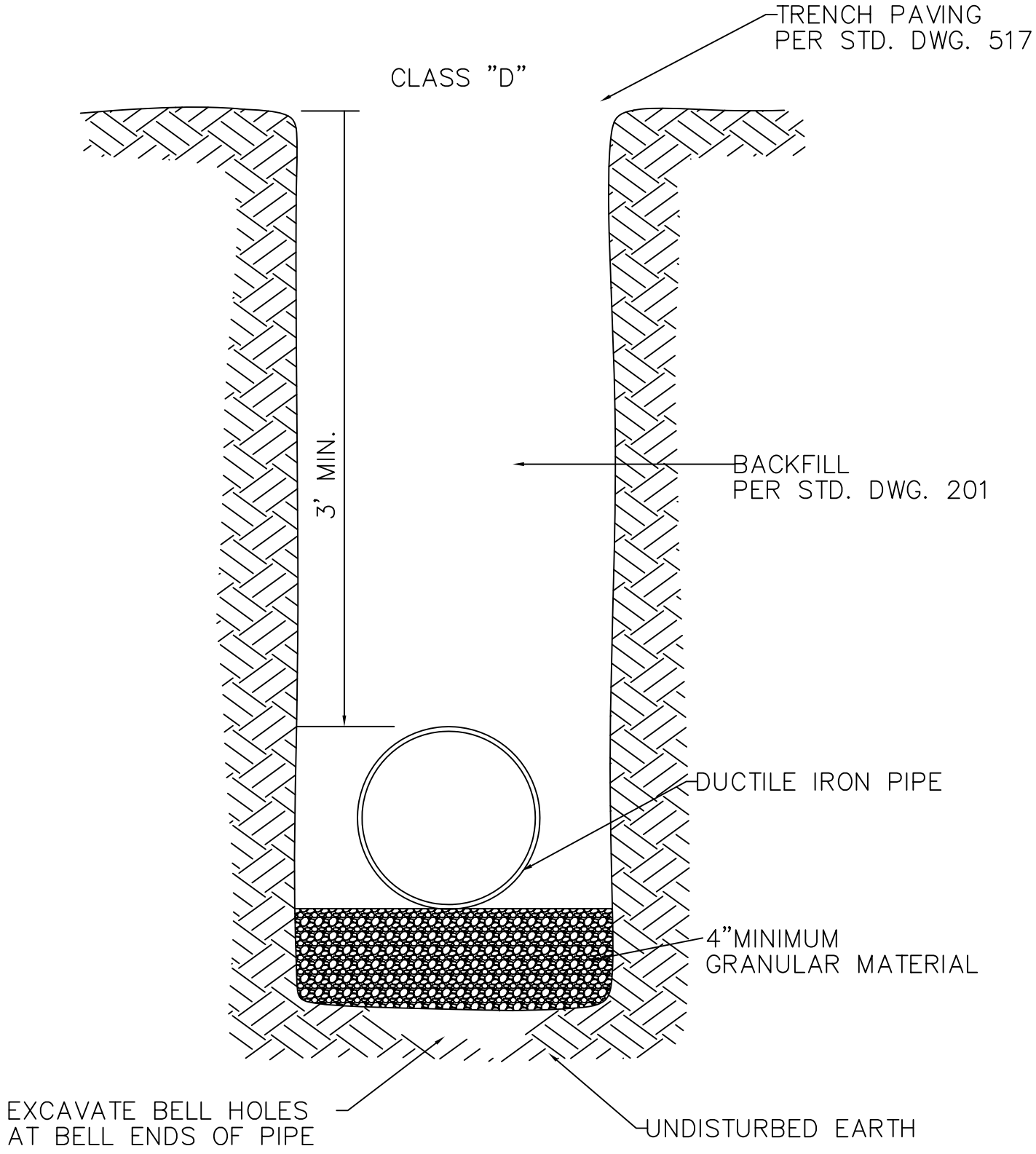

City of Newberg
PUBLIC WORKS ENGINEERING DIVISION
414 E. FIRST STREET NEWBERG, OR 97132
PHONE: 503-537-1240
FAX: 503-537-1277

REVISIONS:	WATER PIPE BEDDING	SCALE:	N.T.S
SEPTEMBER 2013- JAY H.		DATE:	MAY 2007
		APPROVED BY:	D. DANICIC
		STANDARD DRAWING	301